L.N.E.R.

— Southern Area. —

STANDARD WIRING DIAGRAMS

A 10/9/40 J.O.G.	C 18/3/46 J.O.G.	D 22-12-49 R.S.F.	
TELEPHONE REFERENCE ALTERED	RE-DRAWN. CATCH HANDLE CONTACTS REPLACED BY PLUNGERS.	ITEM 2 CIRCUIT REVISED TO INCLUDE ECONOMISER AT G.F. IN LR. CIRCUIT.	
B J.O.G. ITEM REFERENCE ALTERED			

STANDARD GROUND FRAME CONTROL CIRCUITS.

STANDARD WIRING DIAGRAM

1

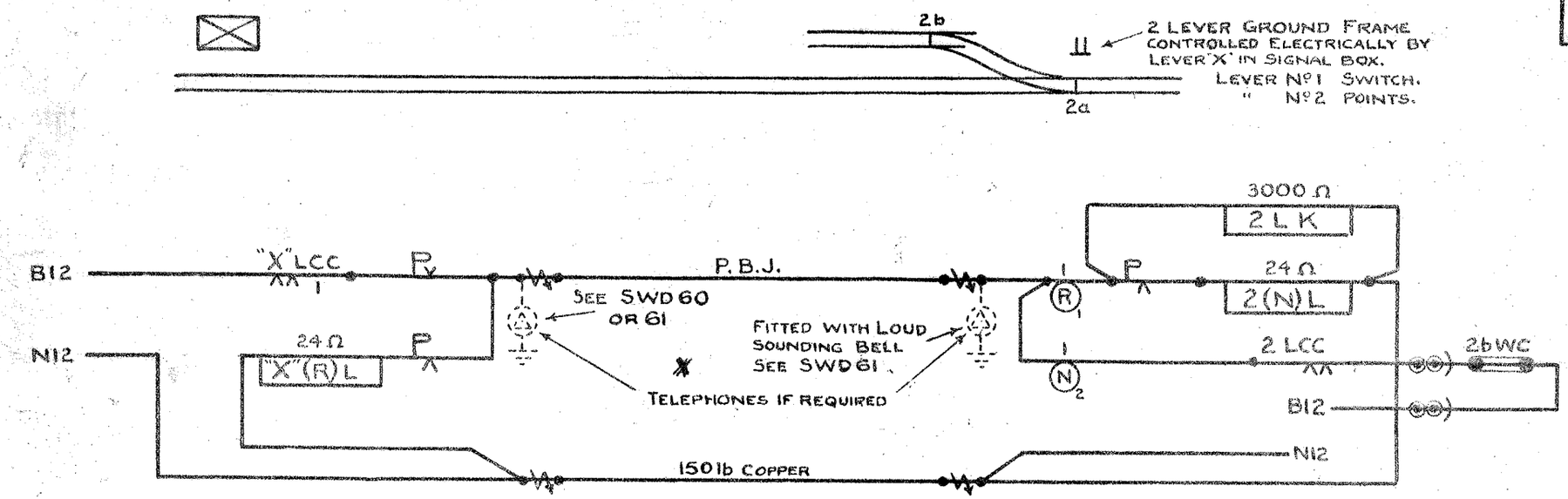

ARRANGEMENT TO BE USED WHEN GROUND FRAME IS NOT MORE THAN 600 YDS FROM SIGNAL BOX.

2

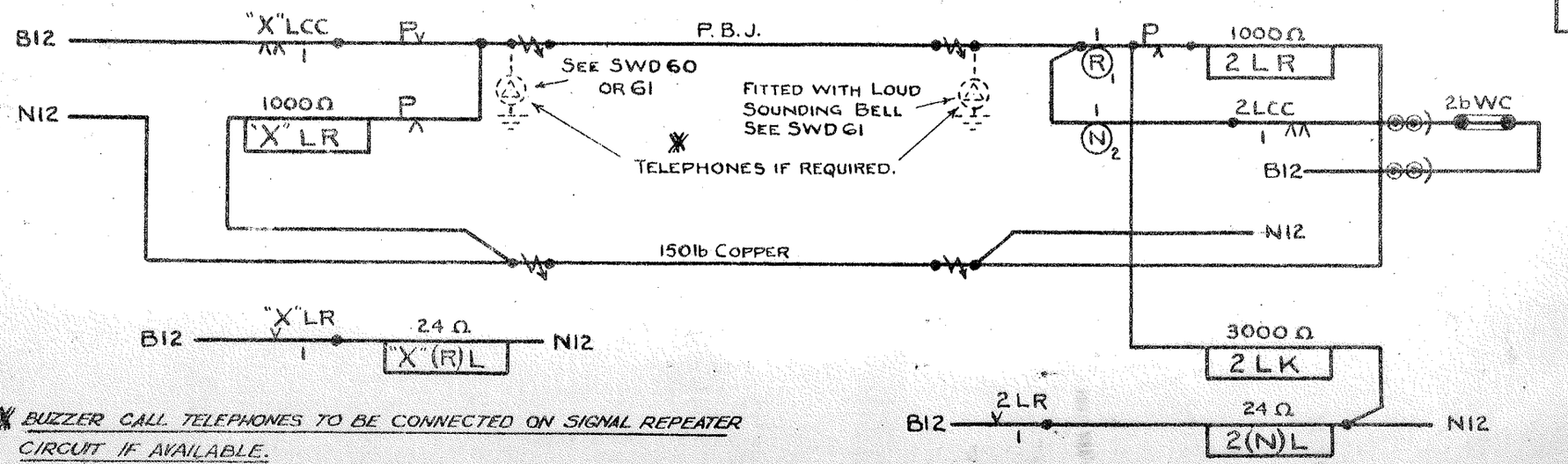

✱ BUZZER CALL TELEPHONES TO BE CONNECTED ON SIGNAL REPEATER CIRCUIT IF AVAILABLE.

ARRANGEMENT TO BE USED WHEN GROUND FRAME IS MORE THAN 600 YDS FROM SIGNAL BOX.

L.N.E.R. SOUTHERN AREA.
SIGNAL & TELEGRAPH ENGINEER'S OFFICE
KINGS CROSS STATION, N.1.

DRAWN BY J.R.McL.
TRACED BY J.O.G.
CHECKED BY [illegible]
DATE 17. 7. 40.

SWD 1D

STANDARD WIRING DIAGRAM

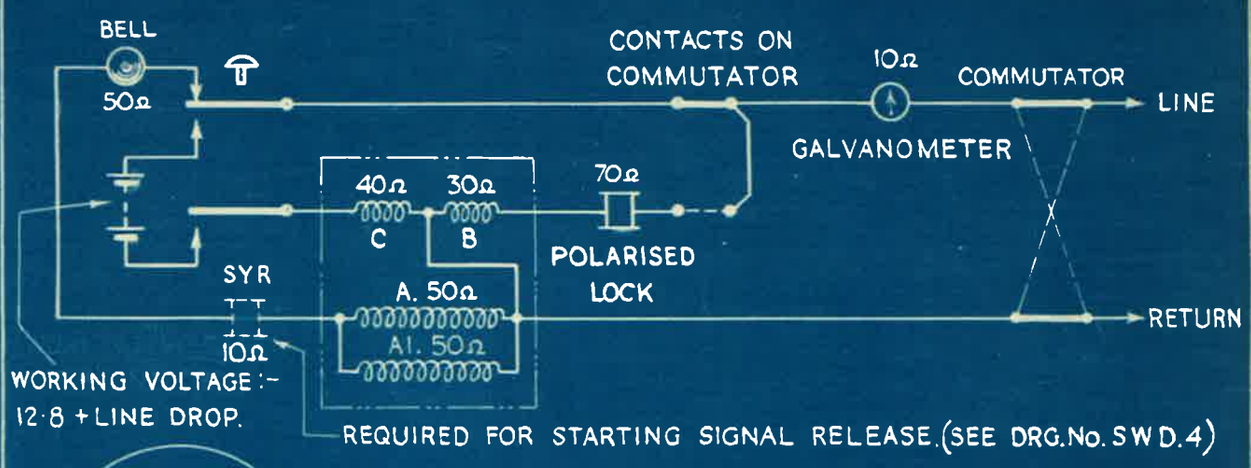

A & A1. POLARISED OR INDICATING COILS.

B. LIFTS STOP OUT TO ALLOW NEEDLE TO GO RIGHT OVER TO "TRAIN GOING TO" INDICATION.

C. PUTS STOP IN TO PREVENT NEEDLE GOING BEYOND "TRAIN COMING FROM" INDICATION.

METHOD OF OPERATION

OPERATION	A		B	
	INDICATION	COILS ENERGISED	INDICATION	COILS ENERGISED
'B' ASKS "IS LINE CLEAR"?	NORMAL	A, A1 (IN PHASE)	NORMAL	C. (STOP IN)
'A' REPLIES "LINE CLEAR" AND HOLDS IN	NORMAL	C. (STOP IN)	NORMAL	A, A1. (IN PHASE)
'A' HOLDS IN, 'B' TURNS COMM. TO 90°	NORMAL	C (STOP IN)	NORMAL	B. (STOP OUT)
'A' HOLDS IN 'B' TURNS COMM. TO 180°	NORMAL	C (STOP IN)	TRAIN GOING TO	A. A1. (OUT OF PHASE)
'B' SENDS "ENTERED SECTION"	TRAIN COMING FROM	A. A1 (OUT OF PHASE)	TRAIN GOING TO	C.
'A' ACKNOWLEDGES "ENTERED SECTION"	TRAIN COMING FROM	C.	TRAIN GOING TO	A. A1 (OUT OF PHASE)
TOKEN ARRIVES AT 'A' AND PLACED IN INSTRUMENT. COMM. TURNED TO 180°. 'A' GIVES OUT OF SECTION.	TRAIN COMING FROM	C.	NORMAL	A. A1. (IN PHASE)
'B' ACKNOWLEDGES "OUT OF SECTION"	NORMAL	A. A1. (IN PHASE)	NORMAL	C. (STOP IN)

"METHOD OF OPERATION" SUPERSEDES DRG. No. LV. 4236

TYER'S KEY TOKEN INSTRUMENT. ORIGINAL FORM.

L.N.E.R. SOUTHERN AREA.
SIGNAL & TELEGRAPH ENGINEER'S OFFICE
KINGS CROSS STATION. N.1.

DRAWN BY T.W.E.	SWD.3
TRACED BY T.W.E.	
CHECKED BY	DATE 1. 8. 40.

STANDARD WIRING DIAGRAM

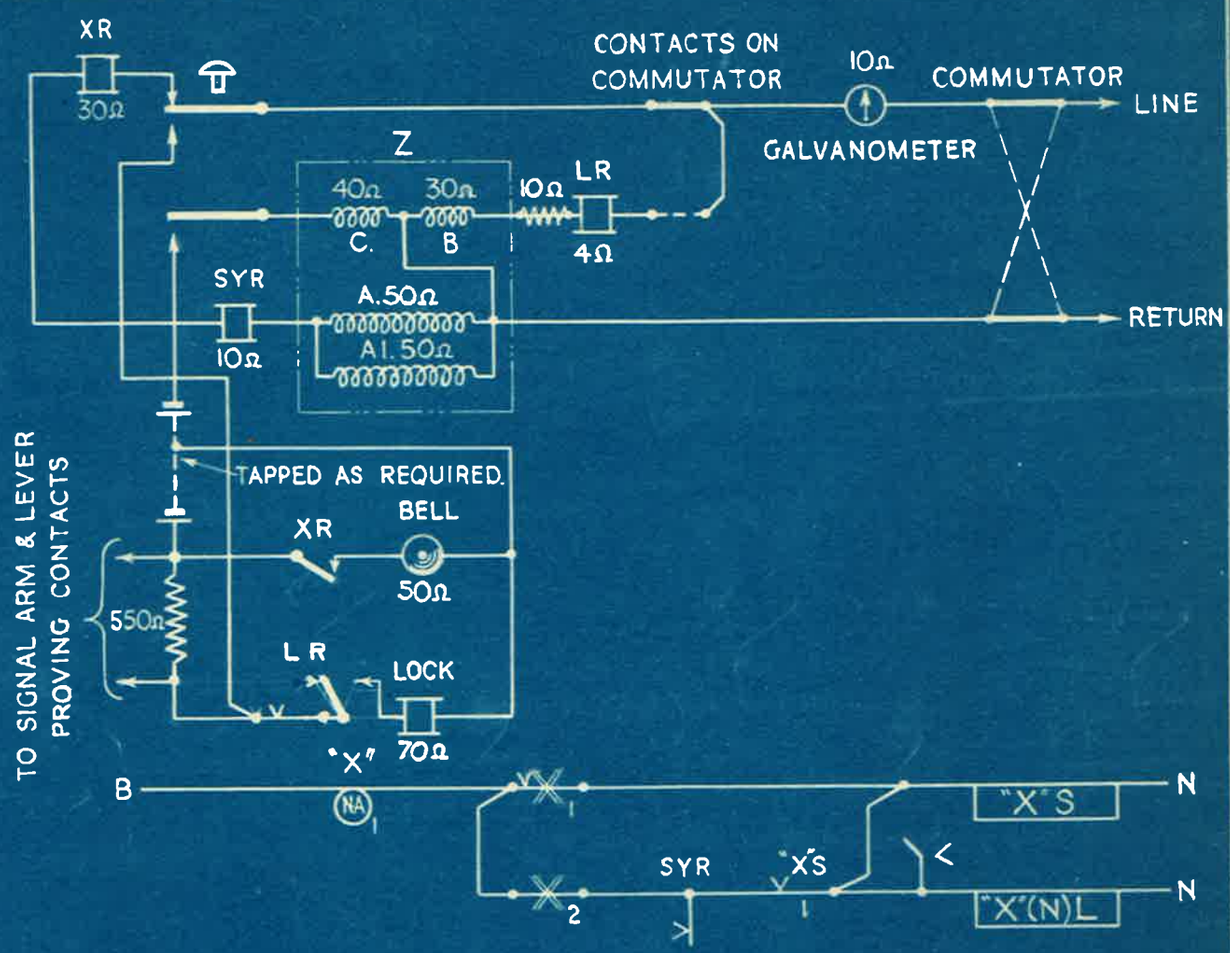

X1 CONTACT MADE MOMENTARILY WHEN KEY TOKEN WITHDRAWN
X2 " BROKEN " " " " INSERTED
Z INDICATOR. (FOR DETAILS SEE DRG.NO. SWD. 3)

TYPES OF RELAYS.

XR. TELEPHONE TYPE
LR. NEUTRAL POLAR REWOUND TO 4Ω
SYR. BRASS CASED POLAR REWOUND TO 10Ω

TYER'S KEY TOKEN INSTRUMENT.

WITH SIGNAL PROVING & STARTING SIGNAL RELEASE EQUIPMENT.

L.N.E.R. SOUTHERN AREA.
SIGNAL & TELEGRAPH ENGINEER'S OFFICE
KINGS CROSS STATION. N.1.

DRAWN BY T.W.E.	SWD.4A
TRACED BY T.W.E.	
CHECKED BY	DATE 3. 8. 40.

A	5-3-43	J.O.G

DETAILS OF RELAYS ADDED.

STANDARD WIRING DIAGRAM

1

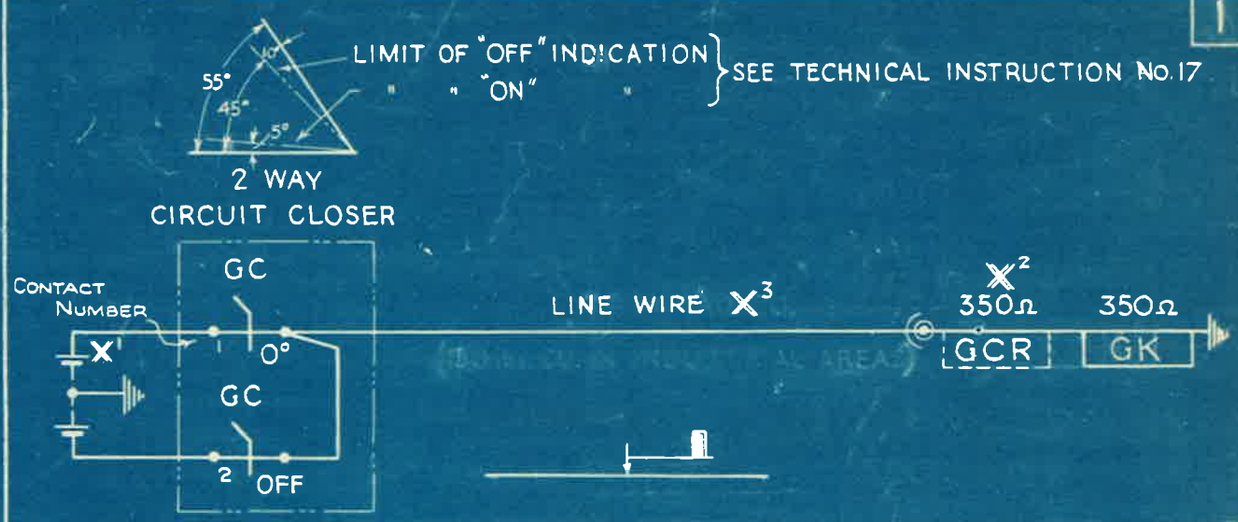

2

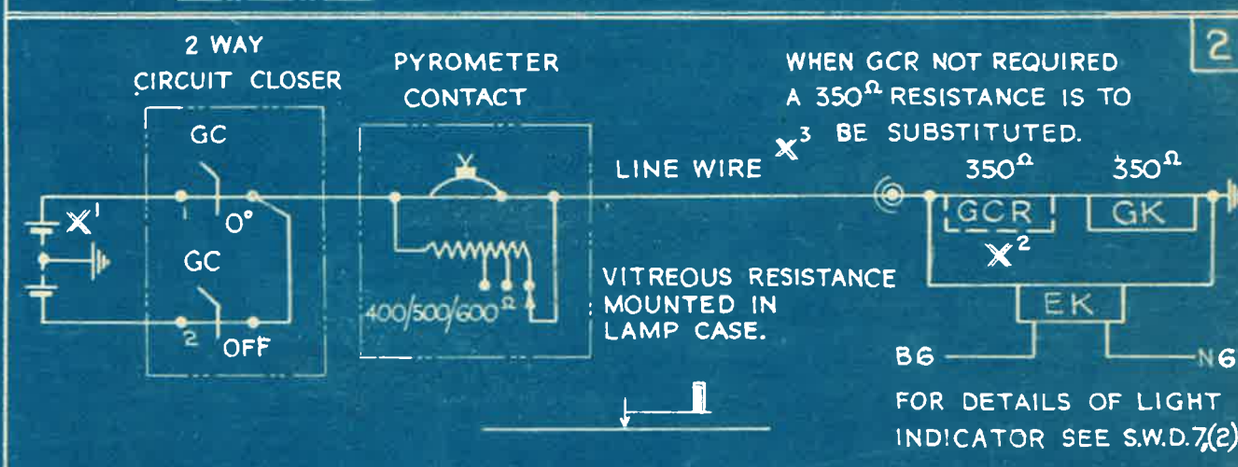

3

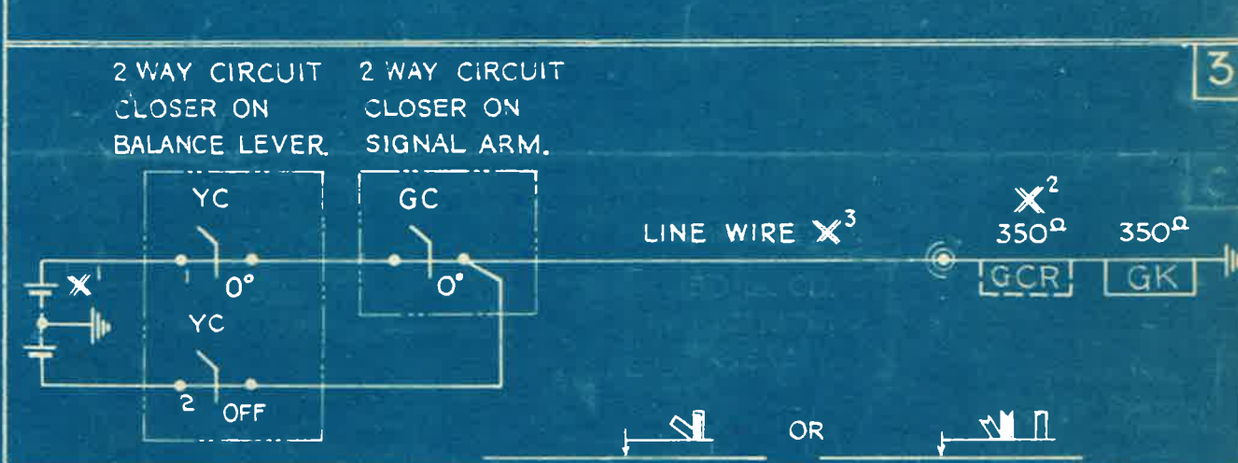

X¹ BATTERIES REQUIRED (SEE BELOW)

CIRCUIT	NUMBER OF CELLS	
	"ON" SIDE	"OFF" SIDE
ITEMS 1 & 3 (WITHOUT GCR)	2	2
ITEMS 1 & 3 (WITH GCR)	5	3
ITEM 2	7	7

Nº1 SAC CELLS FOR SINGLE REPEATER.
AD 236 CELLS FOR MORE THAN ONE REPEATER FED FROM SAME BATTERY.

NOTES

X² GCRs

FOR SINGLE CIRCUIT USE SCH. 415, ITEM 435/1. (ROUND BRASS CASE, NEUTRAL BIAS, 350Ω.)

FOR DOUBLE CIRCUIT USE SCH. 415, ITEM 430/10 (SQUARE, WOODEN CASE, NEUTRAL BIAS, 350Ω.)

X³ LINE WIRE

150lbs. CU. IN INDUSTRIAL AREAS,
70lbs. CADMIUM CU. ELSEWHERE.

SIGNAL REPEATER CIRCUITS.

1. ARM ONLY
2. ARM & LIGHT
3. ARM & BALANCE LEVER (CONTROLLED SIGNAL)

L.N.E.R. SOUTHERN AREA.
SIGNAL & TELEGRAPH ENGINEER'S OFFICE
KINGS CROSS STATION. N.1.

DRAWN BY E.A.R.	SWD.5^
TRACED BY T.W.E.	
CHECKED BY	DATE

STANDARD WIRING DIAGRAM

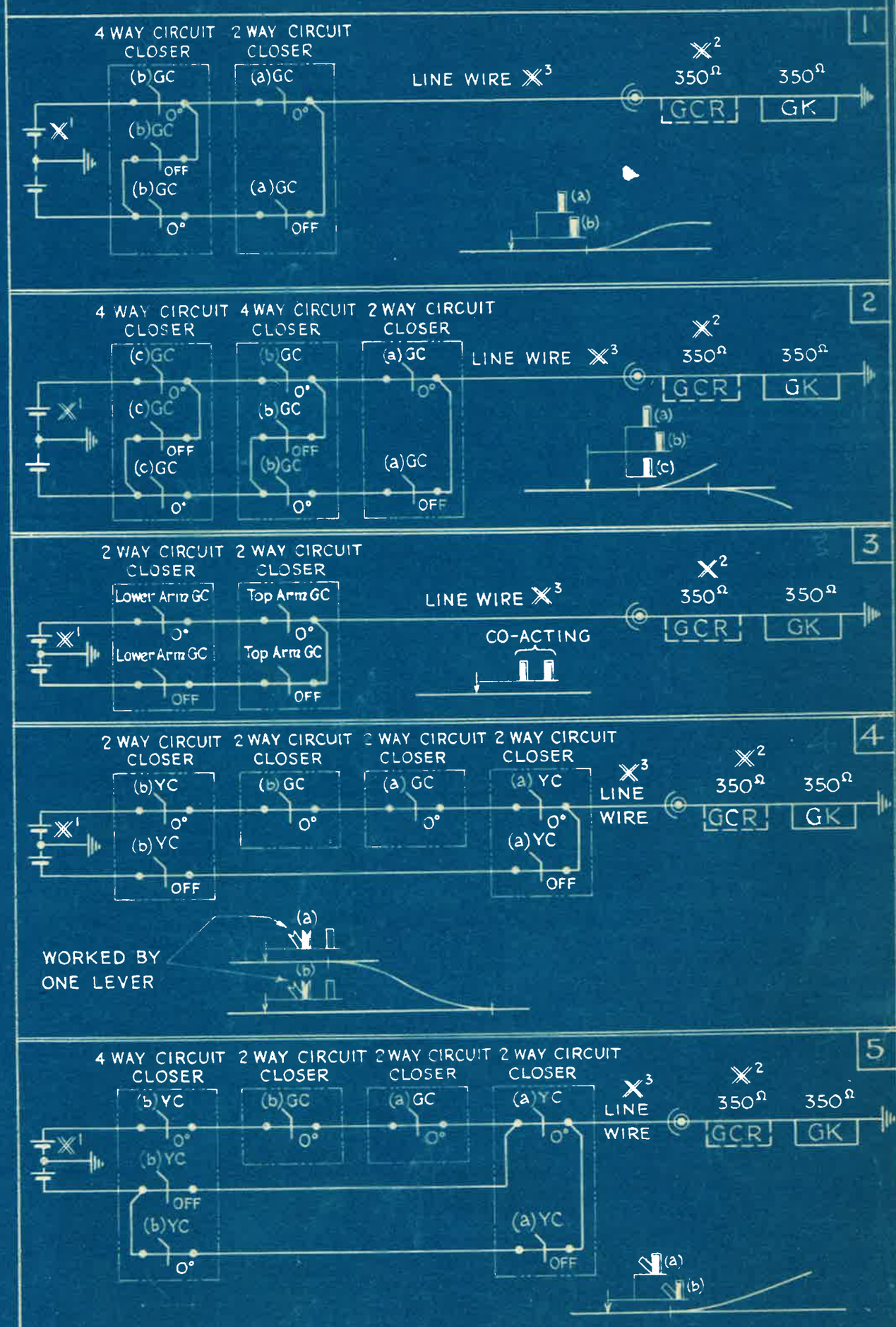

SIGNAL REPEATER CIRCUITS

A. ARMS ONLY, FOR TWO DIVERGING LINES.
B. ARMS ONLY, FOR THREE DIVERGING LINES.
C. ARMS ONLY, FOR TWO CO-ACTING.
D. ARMS & SLOTS, FOR TWO CONVERGING LINES.
E. ARMS & SLOTS, FOR TWO DIVERGING LINES.

L.N.E.R. SOUTHERN AREA.
SIGNAL & TELEGRAPH ENGINEER'S OFFICE
KINGS CROSS STATION, N.1.

DRAWN BY E.A.R.	S.W.D. 6A
TRACED BY T.W.E.	
CHECKED BY	DATE 15. 11. 40.

STANDARD WIRING DIAGRAM

1

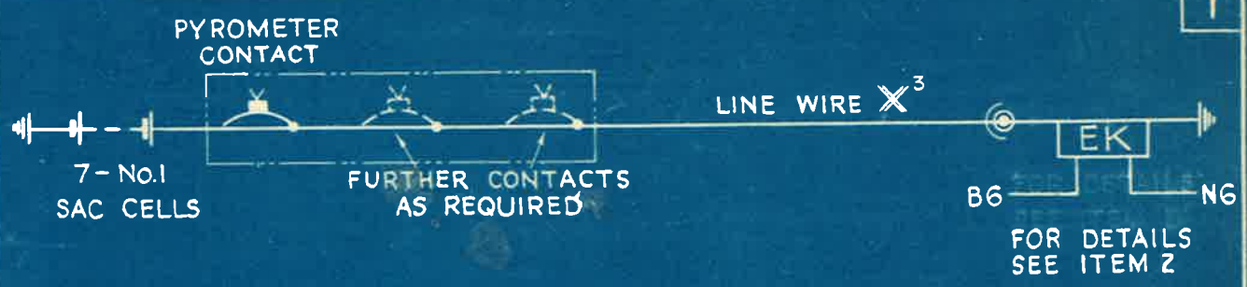

2

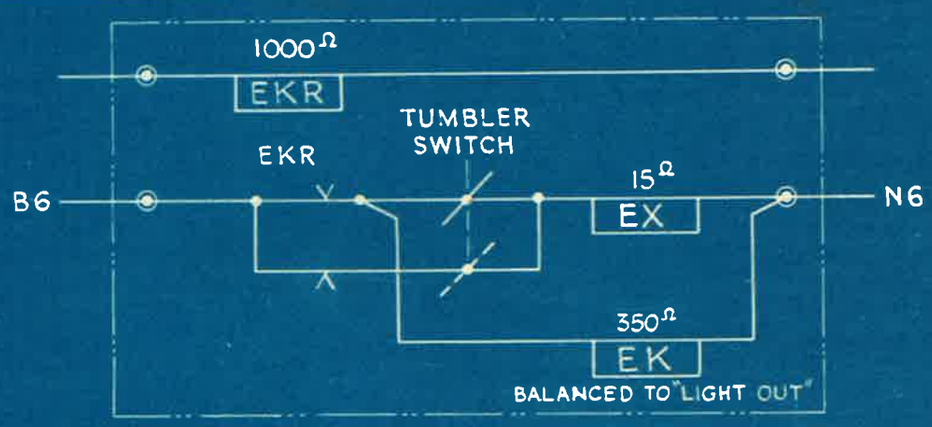

LIGHT INDICATOR UNIT

WHERE AVAILABLE, THE CABIN BATTERY IS TO BE TAPPED TO OBTAIN THE 6v. LOCAL SUPPLY.

FOR NOTES SEE S.W.D.5

SIGNAL REPEATER CIRCUITS

1. LIGHT ONLY
2. LIGHT INDICATOR UNIT (INTERNAL WIRING)

L.N.E.R. SOUTHERN AREA.
SIGNAL & TELEGRAPH ENGINEER'S OFFICE
KINGS CROSS STATION. N.1.

DRAWN BY E.A.R.	SWD. 7A
TRACED BY T.W.E.	
CHECKED BY	DATE 20. 11. 40.

STANDARD WIRING DIAGRAM

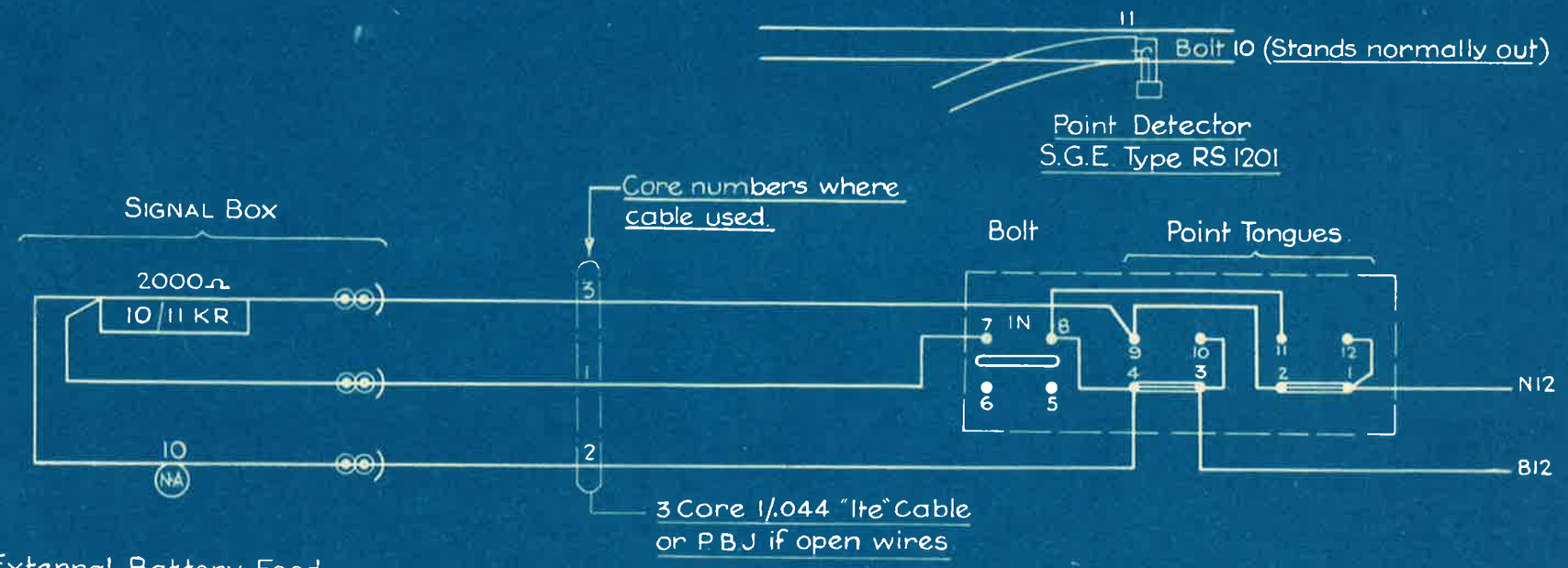

1 External Battery Feed

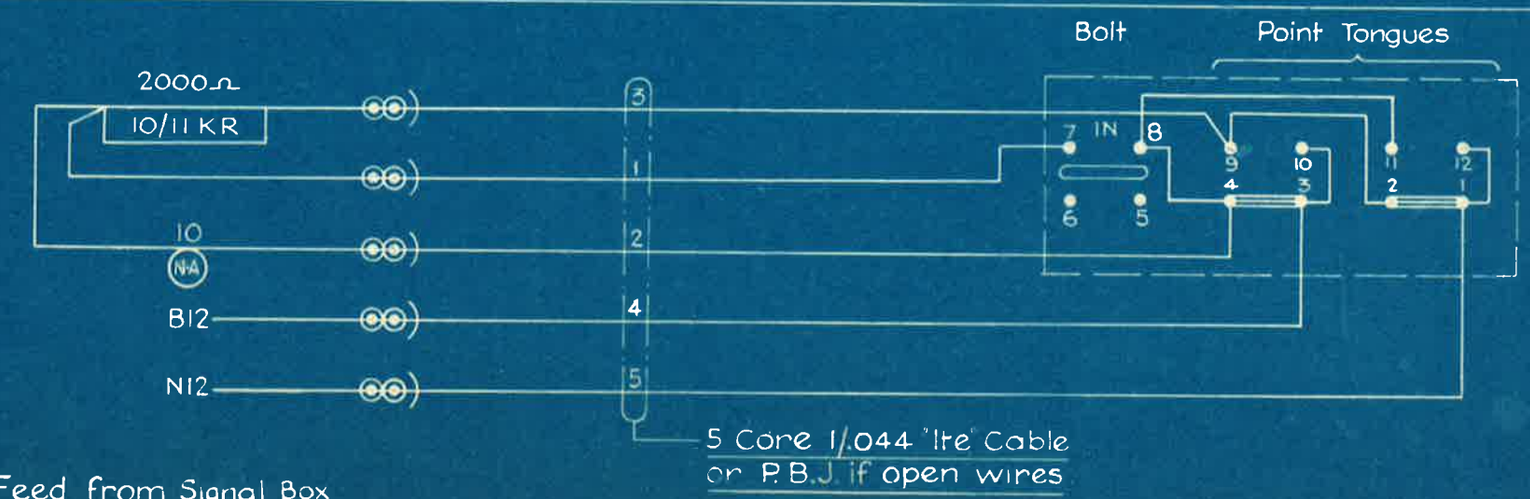

2 Feed from Signal Box

A Rearranged & redrawn 4 6 43

ELECTRICAL DETECTION OF MECHANICAL POINTS.

S.G.E. TYPE RS 1201 DETECTOR.

L.N.E.R. SOUTHERN AREA.
SIGNAL & TELEGRAPH ENGINEER'S OFFICE
KINGS CROSS STATION, N.1.

DRAWN BY
TRACED BY W.T.
CHECKED BY

SWD8A

DATE 4. 6. 43

STANDARD WIRING DIAGRAM

1

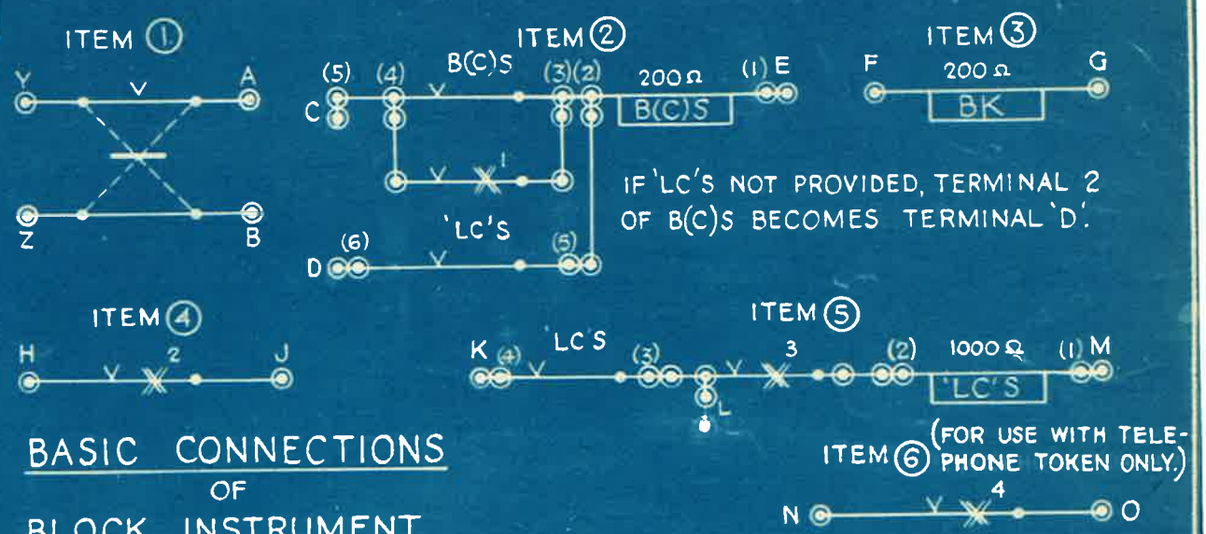

BASIC CONNECTIONS OF BLOCK INSTRUMENT

2

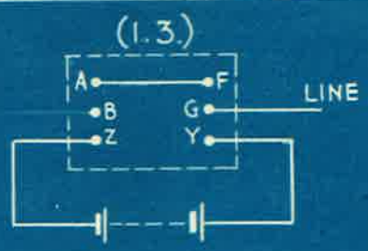

3

STANDARD BLOCK (NO CONTROLS)
ITEMS 1 & 3 ONLY REQUIRED

NOTES

X^1 AND X^2 CONTACTS BROKEN WHEN COMMUTATOR IS AT "LINE CLEAR".

X^3 CONTACT BROKEN MOMENTARILY WHEN COMMUTATOR TURNED FROM "LINE CLEAR" TO "LINE BLOCKED" POSITION.

X^4 CONTACT BROKEN WHEN COMMUTATOR IS AT "LINE CLEAR" OR "TRAIN ON LINE".

THE B(C)S AND 'LC'S RELAYS ARE TELEPHONE TYPE RELAYS MOUNTED ON THE BACK OF THE BLOCK INSTRUMENT.

THE B(T)S RELAY IS A STANDARD 1000 Ω LINE RELAY 2F/B. 2F CONTACTS, CONTRACT 415, ITEM 380. (SEE SWD. 12)

3 WIRE, 3 POSITION SINGLE NEEDLE BLOCK. WIRING OF PEGGER INSTRUMENTS.

L.N.E.R. SOUTHERN AREA.
SIGNAL & TELEGRAPH ENGINEER'S OFFICE
KINGS CROSS STATION, N.1.

DRAWN BY E.A.R.	SWD.11A
TRACED BY T.W.E.	
CHECKED BY	DATE 20. 9. 40.

STANDARD WIRING DIAGRAM

4

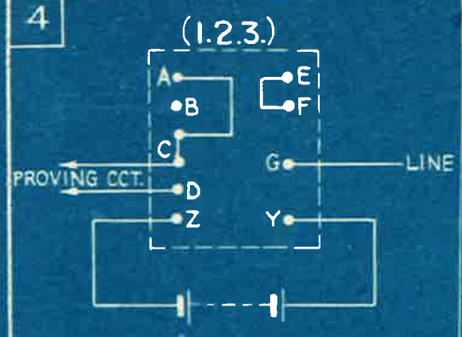

5

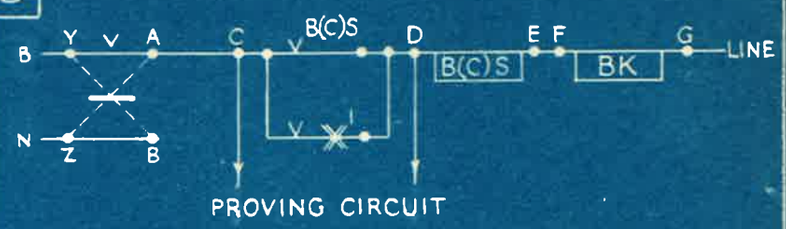

BLOCK WITH SIGNAL PROVING CONTROL

ITEMS 1.2.3. REQUIRED

6

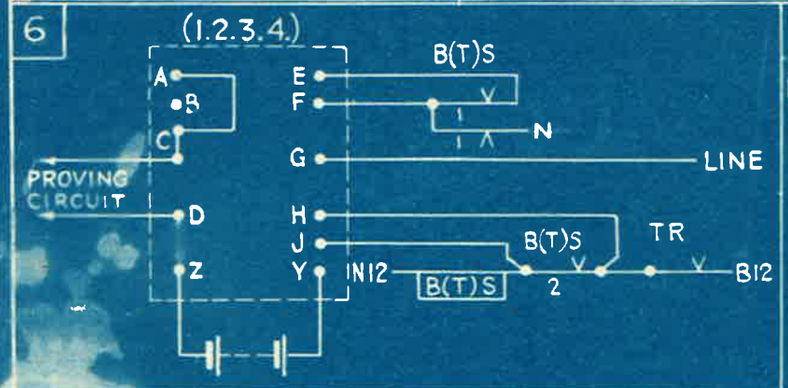

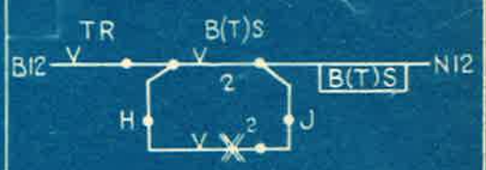

7

TRACK CIRCUIT CONTROL WITH SIGNAL PROVING

ITEMS 1.2.3. &4 REQUIRED

8

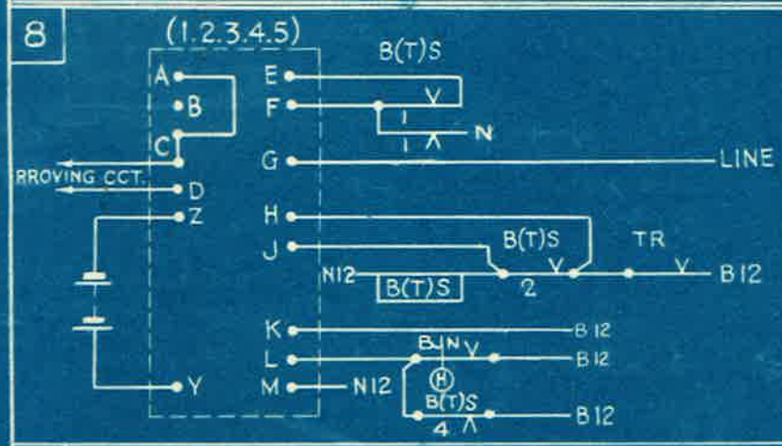

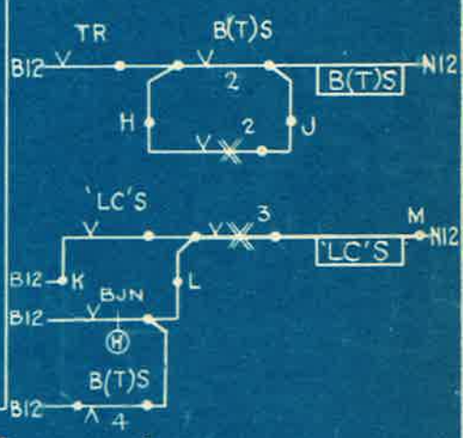

9

FOR NOTES SEE S.W.D. 11

TRACK CIRCUIT CONTROL FOR ONE ACCEPTANCE ONLY

ITEMS 1.2.3.4.& 5 REQUIRED

3 WIRE 3 POSITION SINGLE NEEDLE BLOCK WIRING OF PEGGER INSTRUMENTS.

L.N.E.R. SOUTHERN AREA.

SIGNAL & TELEGRAPH ENGINEER'S OFFICE
KINGS CROSS STATION. N.1.

DRAWN BY E.A.R.	SWD.12A
TRACED BY T.W.E.	
CHECKED BY	DATE 25.9.40.

STANDARD WIRING DIAGRAM

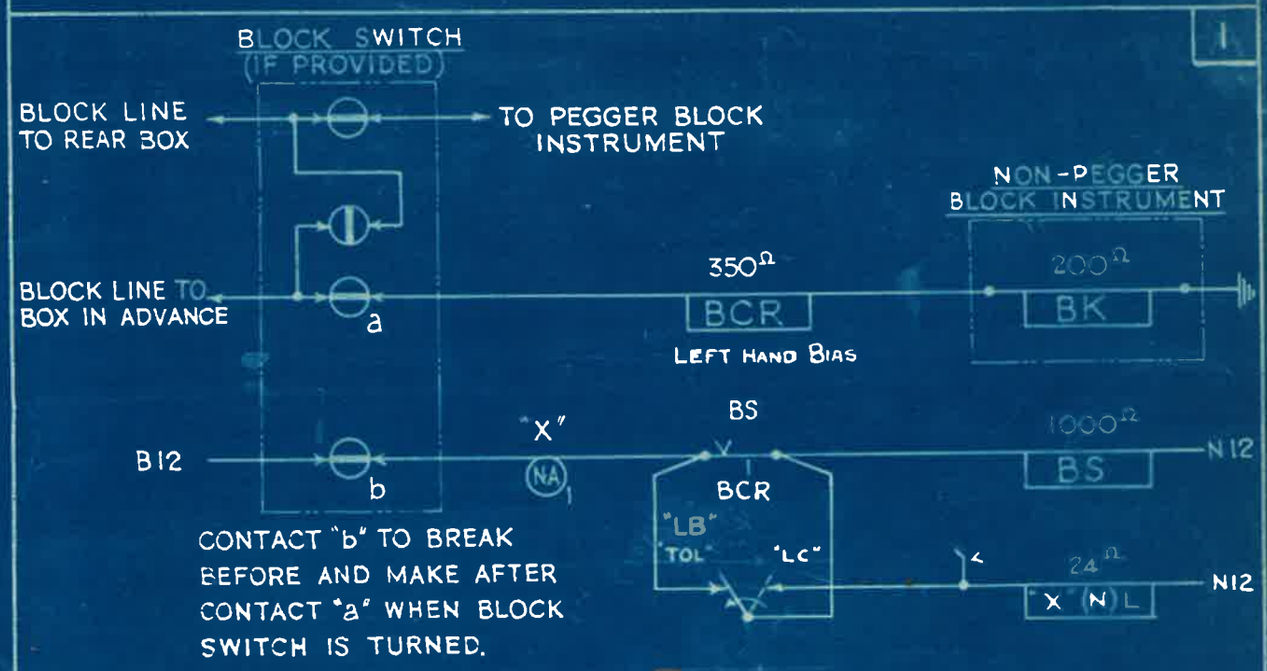

THREE WIRE, THREE INDICATION BLOCK.

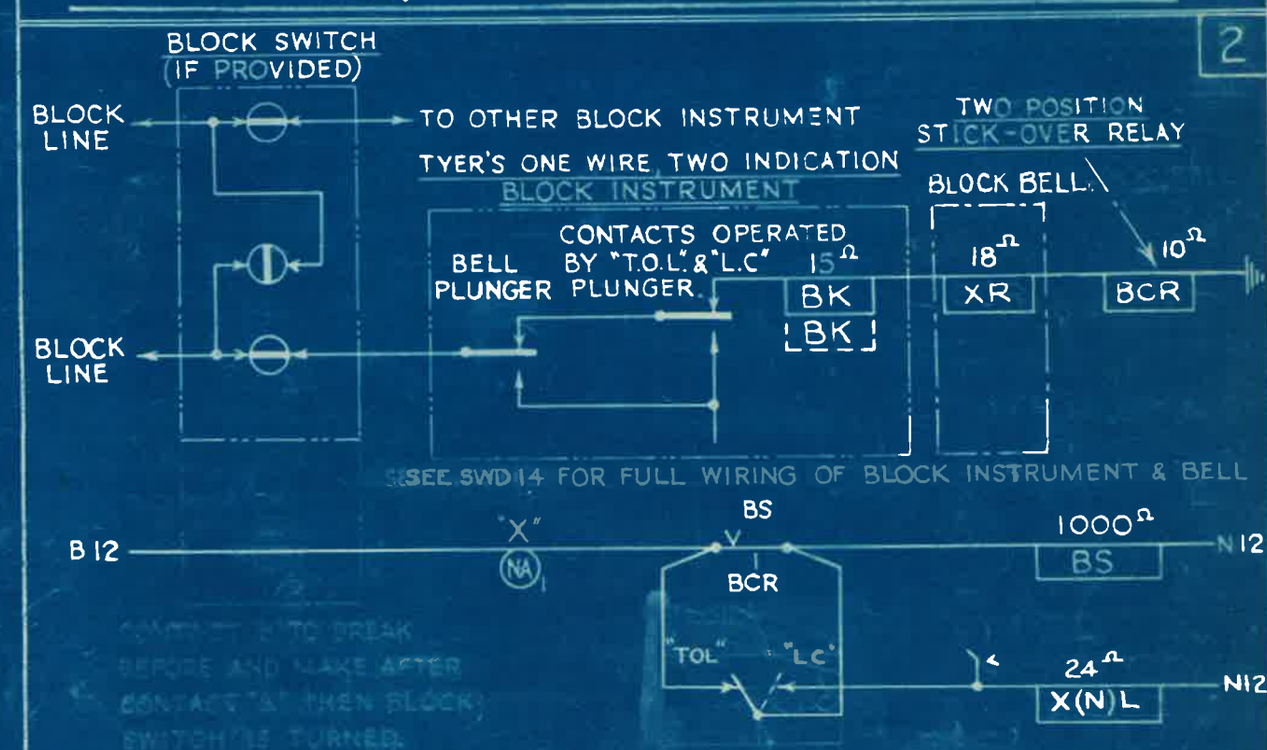

NOTE. FOR SINGLE LINE BLOCK (STARTING SIGNAL CONTROL) SEE SWD 18.

TYER'S ONE WIRE, TWO INDICATION BLOCK

CONTROL OF STARTING SIGNAL BY BLOCK INST. PEGGED TO "LINE CLEAR". RELEASE EFFECTIVE FOR ONE MOVEMENT ONLY.

L.N.E.R. SOUTHERN AREA.
SIGNAL & TELEGRAPH ENGINEER'S OFFICE
KINGS CROSS STATION, N.1.

DRAWN BY J.R.McL
TRACED BY T.W.E.
CHECKED BY

SWD.13c

DATE 4.12.40.

B	20-1-44	J.O.G.	BLOCK SWITCH CONTACT DELETED IN B12 FEED TO XNA, SEE ITEM 2.
C	24-6-44	J.O.G.	REFERENCE TO SINGLE LINE WORKING ALTERED. SEE ITEM 2.

STANDARD WIRING DIAGRAM

1.

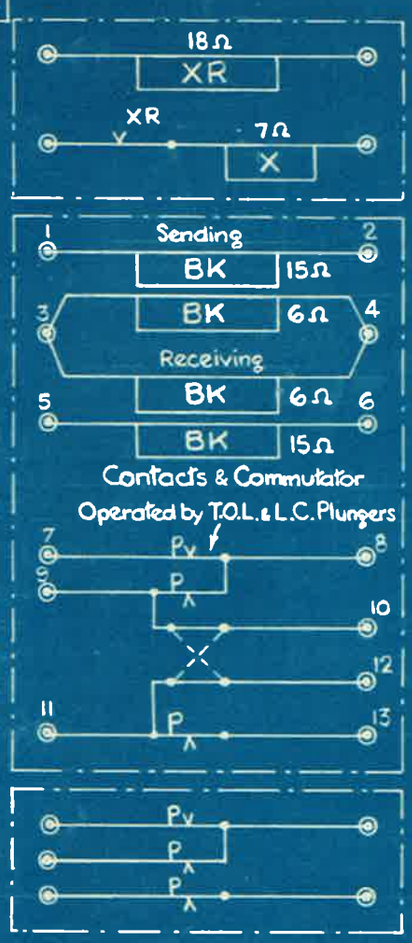

GENERAL ARRANGEMENT

2.

LOCK ON LINE CLEAR PLUNGER

Fitted for Signal Proving where Track Control is not provided, but always required where Trolley Token working exists.

3.

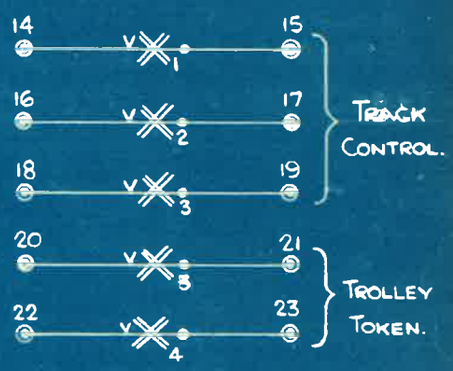

X_1 Contact made when commutator at Line Clear. Broken before X_2 when plunging Train on Line.

X_2 Contact broken when T.O.L. Plunger Depressed.

X_3 Contact made when commutator at Train on Line.

X_4 Contact made when Train Passed Flap turned to right.

SPECIAL CONTACTS FITTED IN BLOCK INSTRUMENT.

4.

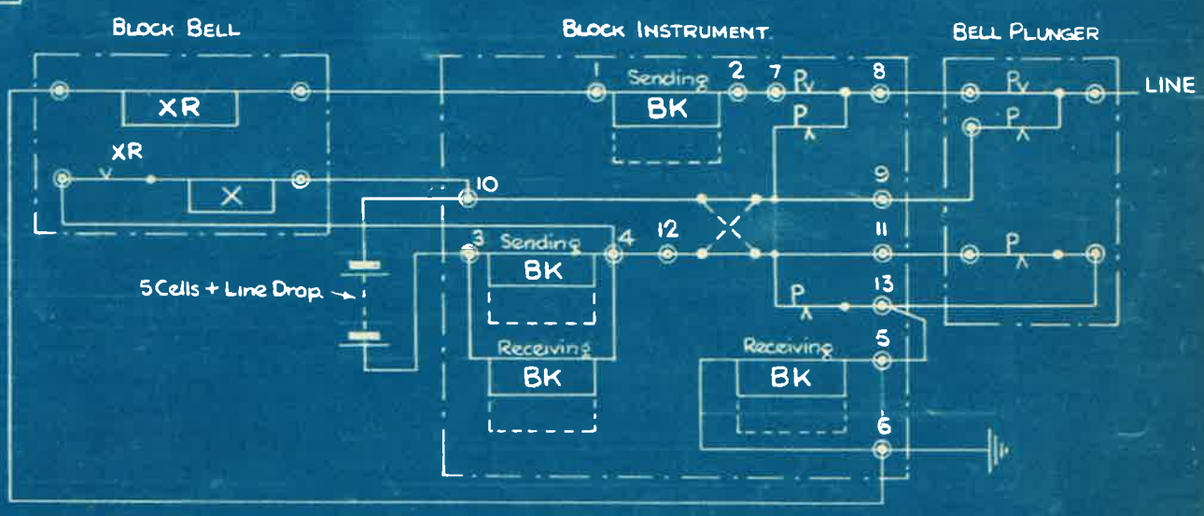

Minimum Operating Currents – Block Bell ..... 0·4 Amp.
Bell Relay & Indicators.. 0·04 Amp.

NOTE – Resistances and operating currents vary with different instruments and the values stated are typical only.

STANDARD BLOCK — NO CONTROLS.

TYER'S ONE WIRE TWO POSITION BLOCK INSTRUMENT.

L.N.E.R. SOUTHERN AREA.
SIGNAL & TELEGRAPH ENGINEER'S OFFICE
KINGS CROSS STATION. N.1.

DRAWN BY
TRACED BY
CHECKED BY

SWD14B

DATE 11.9.41.

B 18·6·43 NOTE RE- Trolley Token Working added in Item 2

A 8.2.43	B 17.3.43	C 18.6.43
Block bell return was connected to terminal 10.	Electrolytic Condenser added.	L.C. PLUNGER LOCK ADDED

STANDARD WIRING DIAGRAM

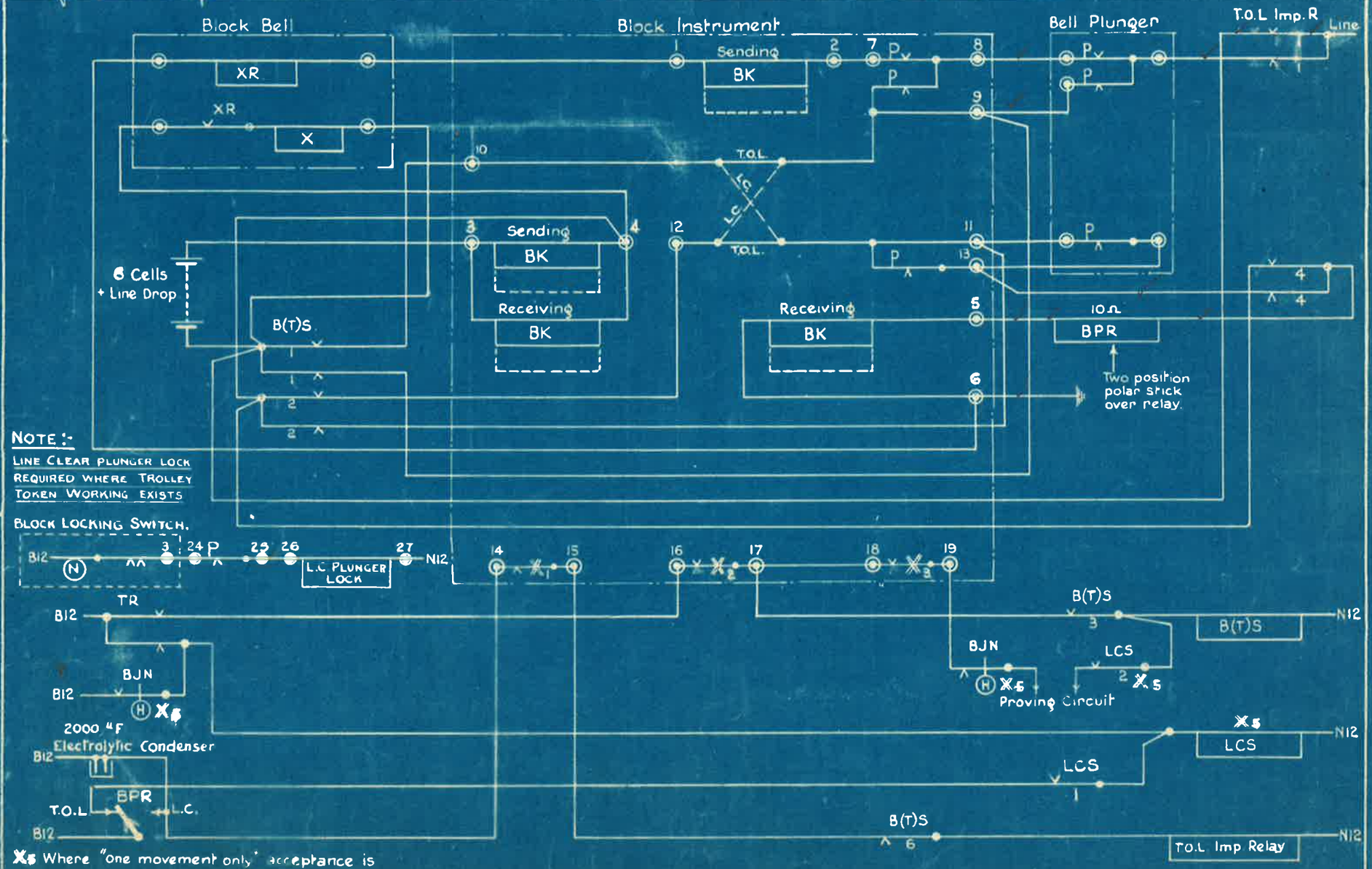

TYER'S ONE WIRE TWO POSITION BLOCK INSTRUMENT.

L.N.E.R. SOUTHERN AREA.
SIGNAL & TELEGRAPH ENGINEER'S OFFICE
KINGS CROSS STATION. N.1.

DRAWN BY J.R. MEL
TRACED BY W.T
CHECKED BY

SWD15C

DATE 11. 9. 41.

STANDARD WIRING DIAGRAM

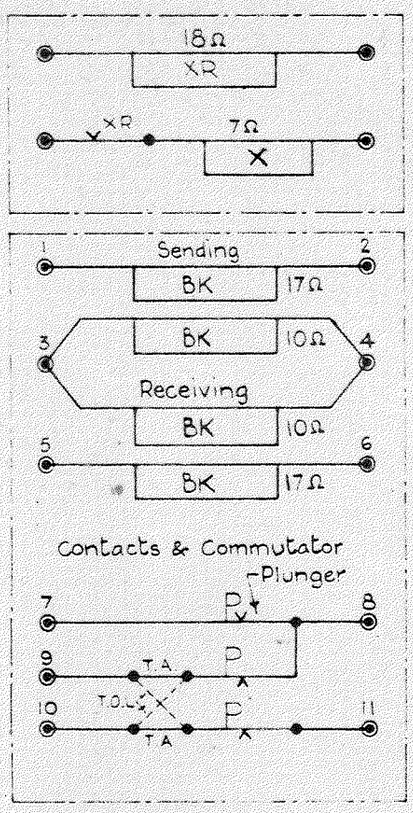

INDICATIONS

"Train Arrived" (Normal)

"Train on Line"

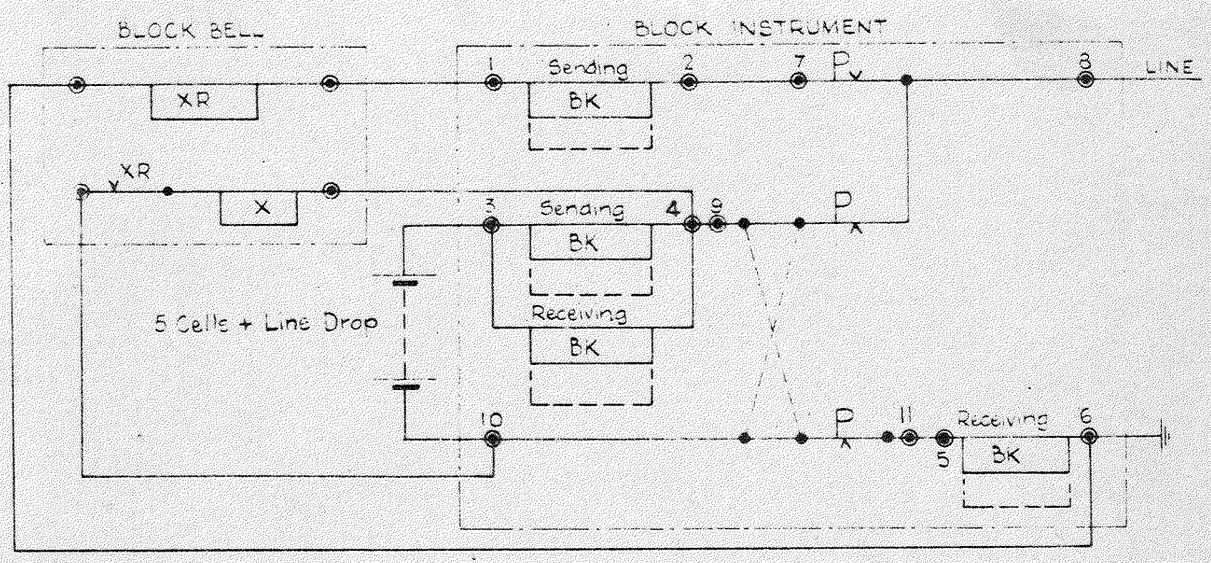

NOTE Resistances given are typical and may vary with different instruments.

STANDARD BLOCK - NO CONTROLS

TYER'S ONE WIRE, TWO POSITION, SINGLE LINE, BLOCK INSTRUMENT.

L.N.E.R. SOUTHERN AREA.

SIGNAL & TELEGRAPH ENGINEER'S OFFICE
KINGS CROSS STATION. N.1.

DRAWN BY	SWD.16
TRACED BY	
CHECKED BY	DATE 11.1.43.

STANDARD WIRING DIAGRAM

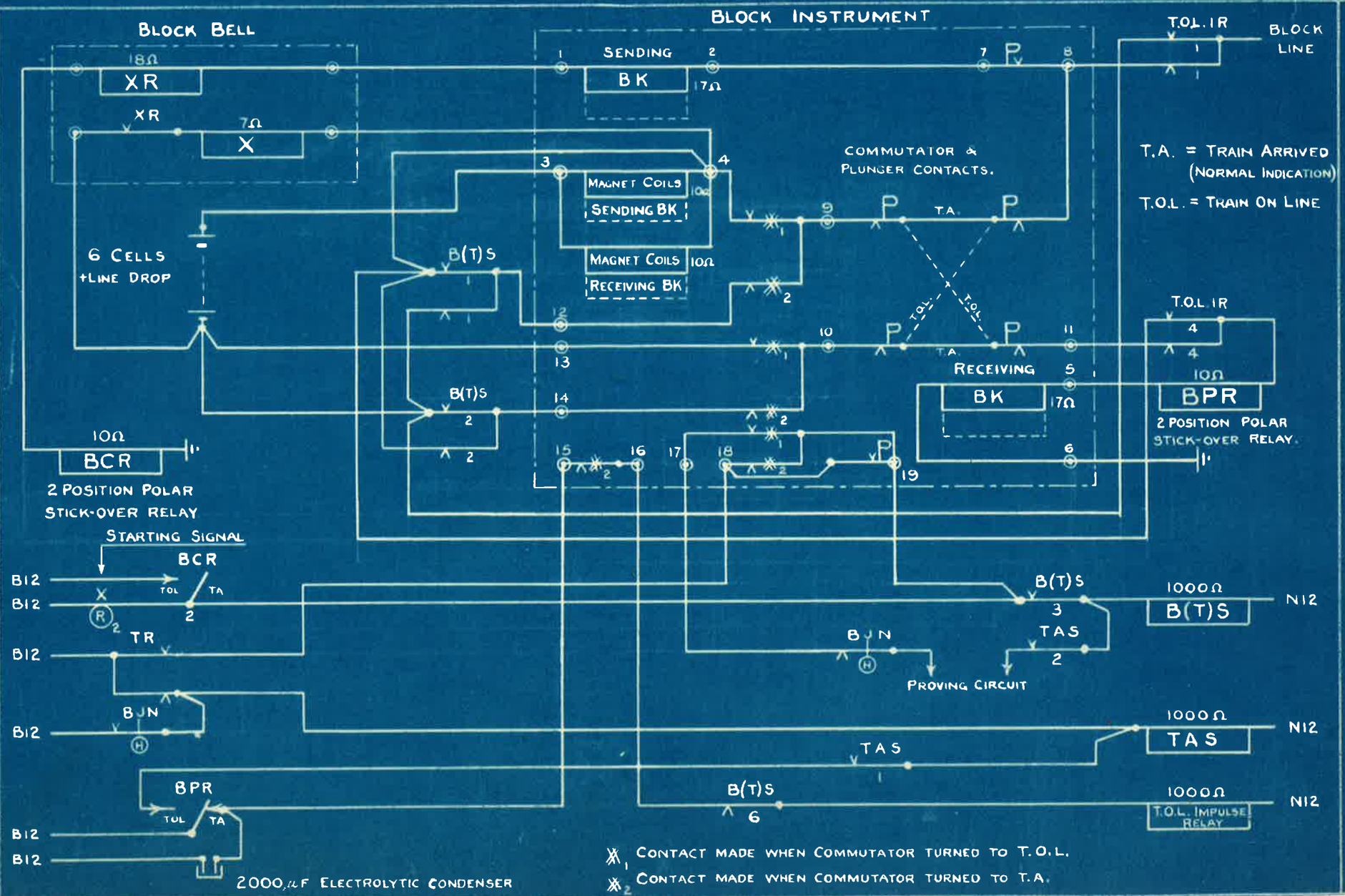

TYER'S ONE WIRE. TWO POSITION
SINGLE LINE BLOCK INSTRUMENT
TRACK CIRCUIT CONTROL & SIGNAL PROVING
EFFECTIVE FOR ONE MOVEMENT ONLY.

L.N.E.R. SOUTHERN AREA
SIGNAL & TELEGRAPH ENGINEER'S OFFICE
KINGS CROSS STATION, N.1.

DRAWN BY J.O.G.
TRACED BY
CHECKED BY
DATE 9-6-44

SWD17.

STANDARD WIRING DIAGRAM

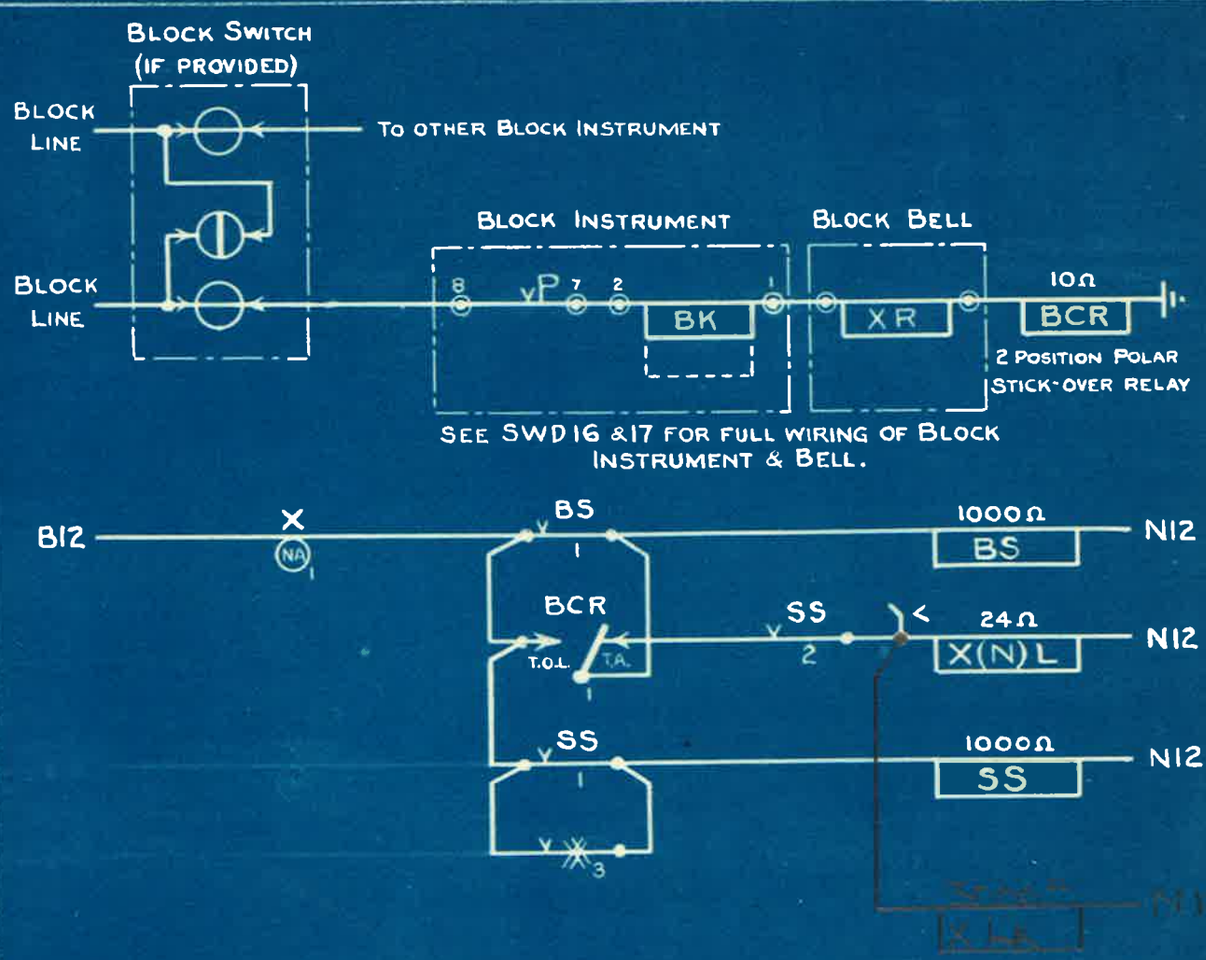

X STARTING SIGNAL LEVER.

$\times_3$ CONTACT IN TICKET BOX MADE WHEN LID OPEN.

NOTE. FOR DOUBLE LINE BLOCK (STARTING SIGNAL CONTROL) SEE SWD 13.

TYERS ONE WIRE TWO INDICATION SINGLE LINE BLOCK.

CONTROL OF STARTING SIGNAL BY BLOCK AND TRAIN STAFF. RELEASE EFFECTIVE FOR ONE MOVEMENT ONLY.	L.N.E.R. SOUTHERN AREA. SIGNAL & TELEGRAPH ENGINEER'S OFFICE KINGS CROSS STATION. N.1.
	DRAWN BY J.O.G. — SWD 18.
	TRACED BY
	CHECKED BY — DATE 23-6-44.

STANDARD WIRING DIAGRAM

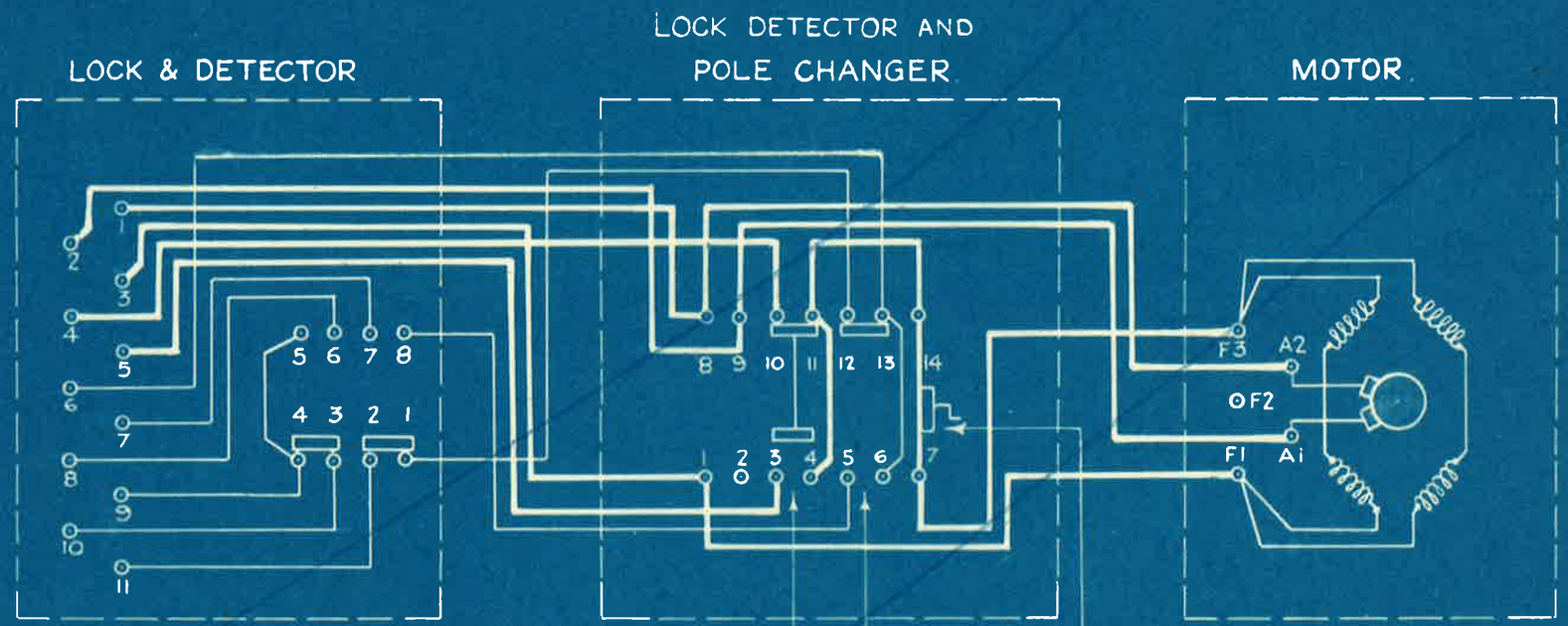

Notes 1. Motor Switch contacts both make immediately on commencement of stroke and changeover at end of stroke. This enables points to be restored to original position during stroke.

2. Isolating contacts to be strapped where individual hand cranks are used.

3. Stroke of Drive Rod 5"
Stroke of Lock Bar $8\frac{1}{2}$"

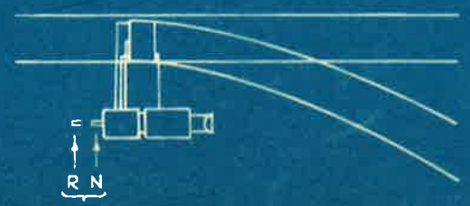

Position of Lock Bar

Typical Operating Characteristics

	Single Ended		Double Ended	
Volts	30		30	
Amps	5.2 (Max)	4.5 (average)	5.5 (Max)	4.5 (average)
Time	4 Seconds		5.5 Seconds	

(WITHDRAWN)

A Redrawn to shew internal wiring only

INTERNAL WIRING OF LOW VOLTAGE COMBINED TYPE POINT MACHINE.
S G E TYPE 1234

L.N.E.R. SOUTHERN AREA.
SIGNAL & TELEGRAPH ENGINEERS OFFICE
KINGS CROSS STATION, N.1.

DRAWN BY W.T.
TRACED BY W.T.
CHECKED BY
DATE 7. 6. 43.

SWD 22A

STANDARD WIRING DIAGRAM

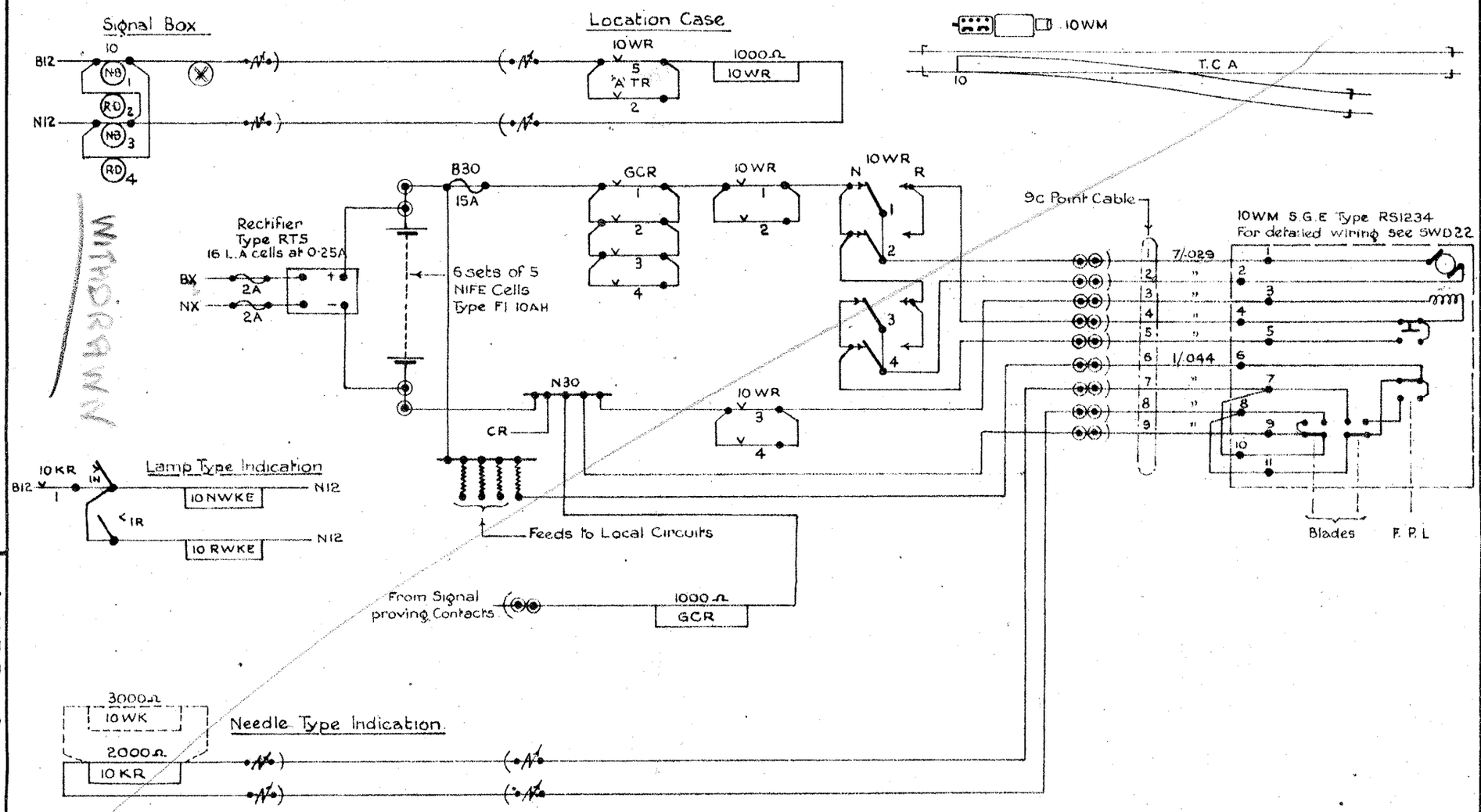

X Contact in 2-way circuit breaker operated by Annetts Lock, or in Crank Handle Controller
Contact broken when Crank Handle withdrawn.

Note:- If power supply not available, battery feed, as shewn on SWD24 to be used.

STANDARD WIRING OF LOW VOLTAGE, COMBINED TYPE POINT MACHINE FOR SINGLE ENDED POINTS. NORMAL LEFT HAND LAY. POWER FEED. S.G.E TYPE 1234 MACHINE.

L.N.E.R. SOUTHERN AREA.
SIGNAL & TELEGRAPH ENGINEER'S OFFICE
KINGS CROSS STATION. N.1.

DRAWN BY E.A.R.
TRACED BY W.T
CHECKED BY

SWD23

DATE 22. 10. 41.

STANDARD WIRING DIAGRAM

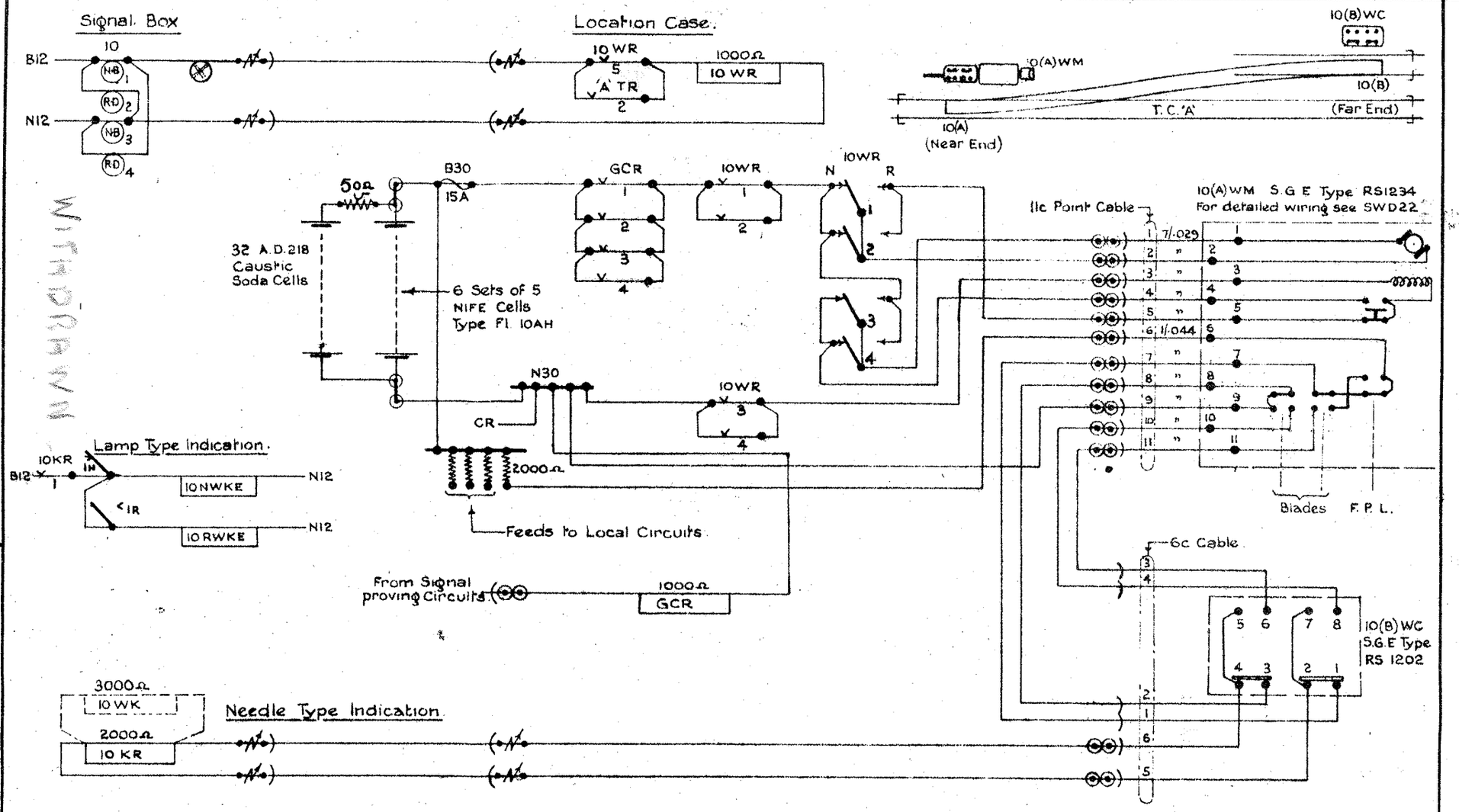

WITHDRAWN

✱ Contact in 2-way circuit breaker operated by Annetts Lock, or in Crank Handle Controller. Contact broken when Crank Handle withdrawn.

Note:- If power supply available, Rectifier Feed as shewn on S.W.D23 to be used.

STANDARD WIRING OF LOW VOLTAGE, COMBINED TYPE POINT MACHINE FOR DOUBLE ENDED POINTS. NORMAL RIGHT HAND LAY. BATTERY FEED. S.G.E TYPE 1234 MACHINE

L.N.E.R. SOUTHERN AREA.
SIGNAL & TELEGRAPH ENGINEER'S OFFICE
KINGS CROSS STATION, N.1.

DRAWN BY E.A.R.
TRACED BY W.T.
CHECKED BY
DATE 22.10.41.

SWD24

STANDARD WIRING DIAGRAM

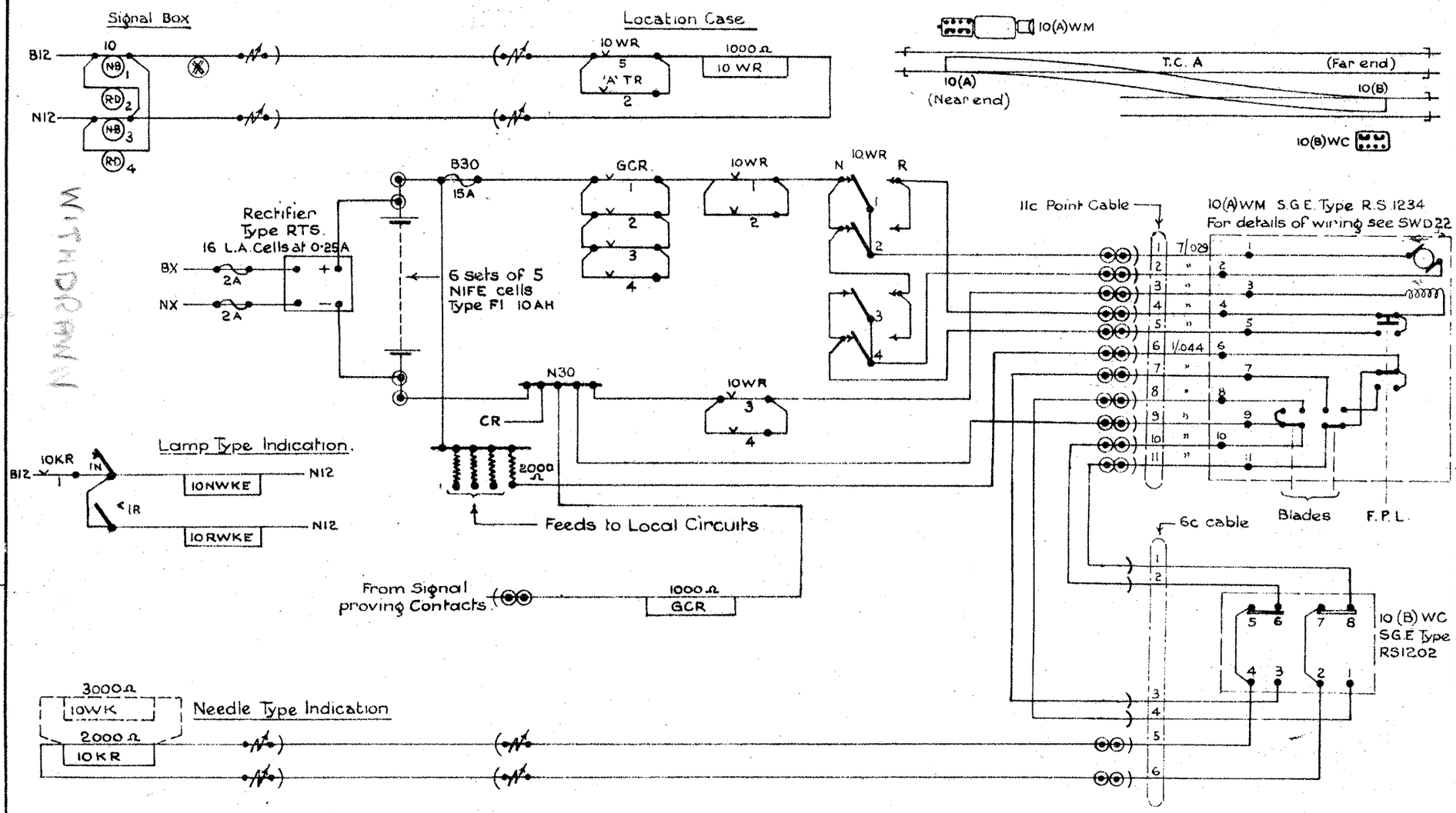

✱ Contact in 2-way circuit breaker operated by Annetts Lock, or in Crank Handle Controller. Contact broken when Crank Handle withdrawn.

Note:- If power supply not available, battery feed, as shewn on SWD24 to be used

WITHDRAWN

STANDARD WIRING OF LOW VOLTAGE COMBINED TYPE POINT MACHINE FOR DOUBLE ENDED POINTS.

NORMAL LEFT HAND LAY, POWER FEED.

S.G.E. TYPE 1234 MACHINE.

L.N.E.R. SOUTHERN AREA.
SIGNAL & TELEGRAPH ENGINEER'S OFFICE
KINGS CROSS STATION, N.1.

DRAWN BY E.A.R.
TRACED BY W.T.
CHECKED BY
DATE 22. 10. 41.

SWD25

STANDARD WIRING DIAGRAM

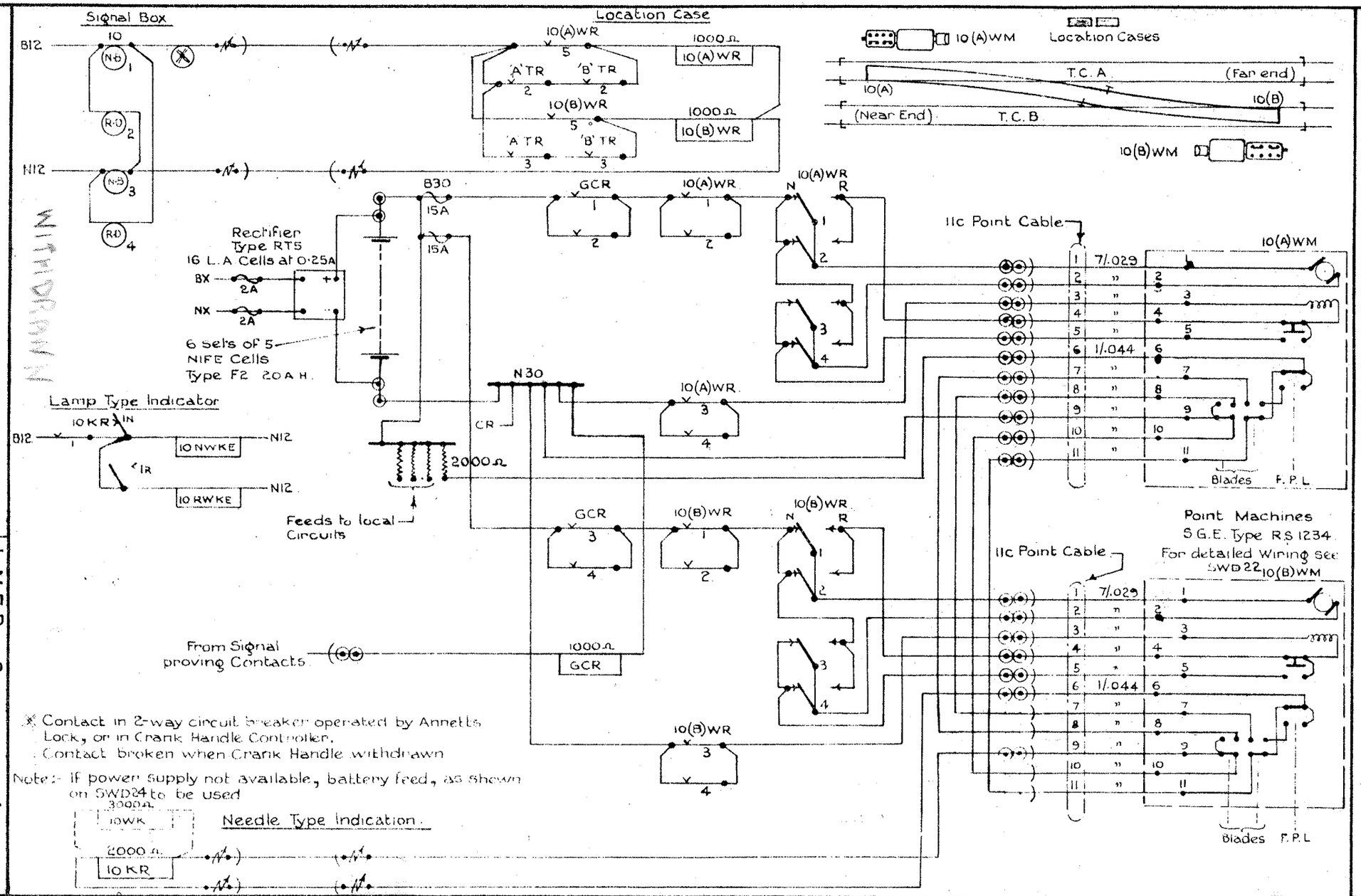

* Contact in 2-way circuit breaker operated by Annetts Lock, or in Crank Handle Controller. Contact broken when Crank Handle withdrawn

Note:- If power supply not available, battery feed, as shown on SWD24 to be used

STANDARD WIRING OF LOW VOLTAGE COMBINED TYPE POINT MACHINES FOR DOUBLE ENDED POINTS, TWO MACHINES, NORMAL LEFT HAND LAY, POWER FEED S.G.E. TYPE 1234 MACHINES.

L.N.E.R. SOUTHERN AREA.
SIGNAL & TELEGRAPH ENGINEER'S OFFICE
KINGS CROSS STATION, N.1.

DRAWN BY E.A.K
TRACED BY W.T
CHECKED BY

SWD26

DATE 22. 10. 41.

A	16.7.43

Contact Nos. on 10 WR altered.

STANDARD WIRING OF 110 VOLT SEPARATE TYPE POINT MACHINE OPERATED BY HAND GENERATOR

W.B.S. STYLE C MACHINE

RIGHT HAND LAYOUT WITH LEFT HAND TONGUE CLOSED

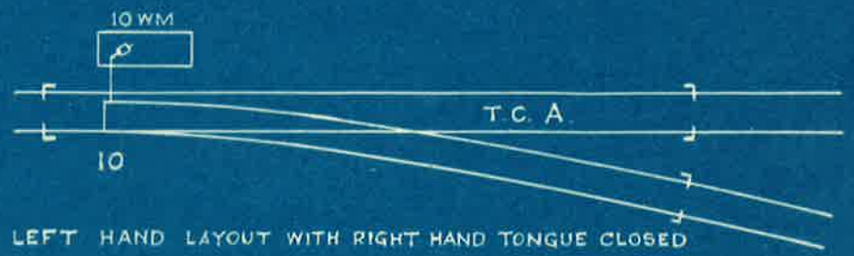

LEFT HAND LAYOUT WITH RIGHT HAND TONGUE CLOSED

SIGNAL BOX

POINT LOCATION

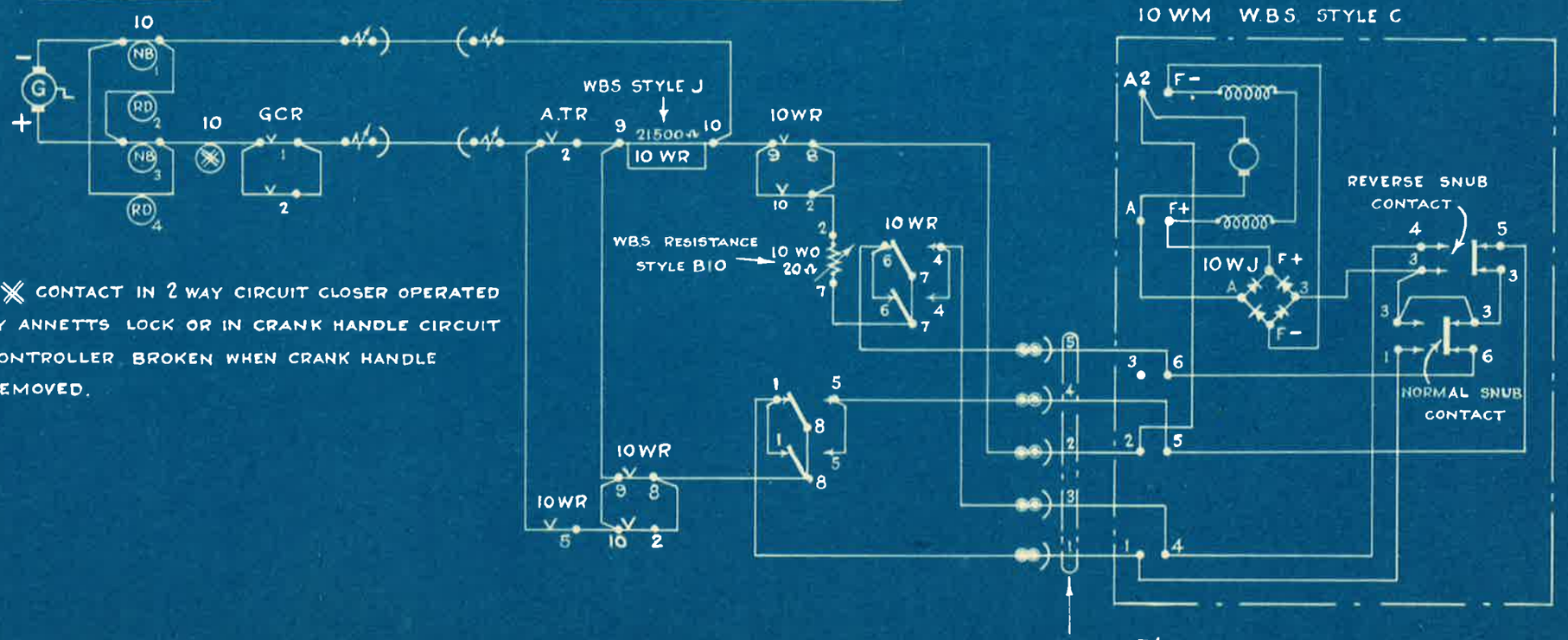

※ CONTACT IN 2 WAY CIRCUIT CLOSER OPERATED BY ANNETTS LOCK OR IN CRANK HANDLE CIRCUIT CONTROLLER BROKEN WHEN CRANK HANDLE REMOVED.

FOR WIRING OF POINT DETECTION CIRCUITS SEE SWD

L.N.E.R. SOUTHERN AREA.
SIGNAL & TELEGRAPH ENGINEER'S OFFICE
KINGS CROSS STATION, N.1.

DRAWN BY
TRACED BY C.E.P.
CHECKED BY

SWD 27A

DATE 22-4-43

STANDARD WIRING DIAGRAM

A	16.7.43

Contact Nos. on 10WR altered.

STANDARD WIRING OF 110 VOLT SEPARATE TYPE POINT MACHINE OPERATED BY HAND GENERATOR

W.B.S. STYLE C MACHINE

LEFT HAND LAYOUT WITH LEFT HAND TONGUE CLOSED

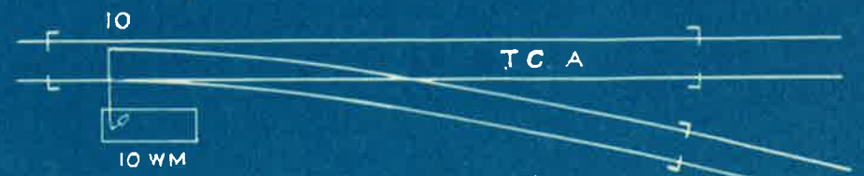

RIGHT HAND LAYOUT WITH RIGHT HAND TONGUE CLOSED

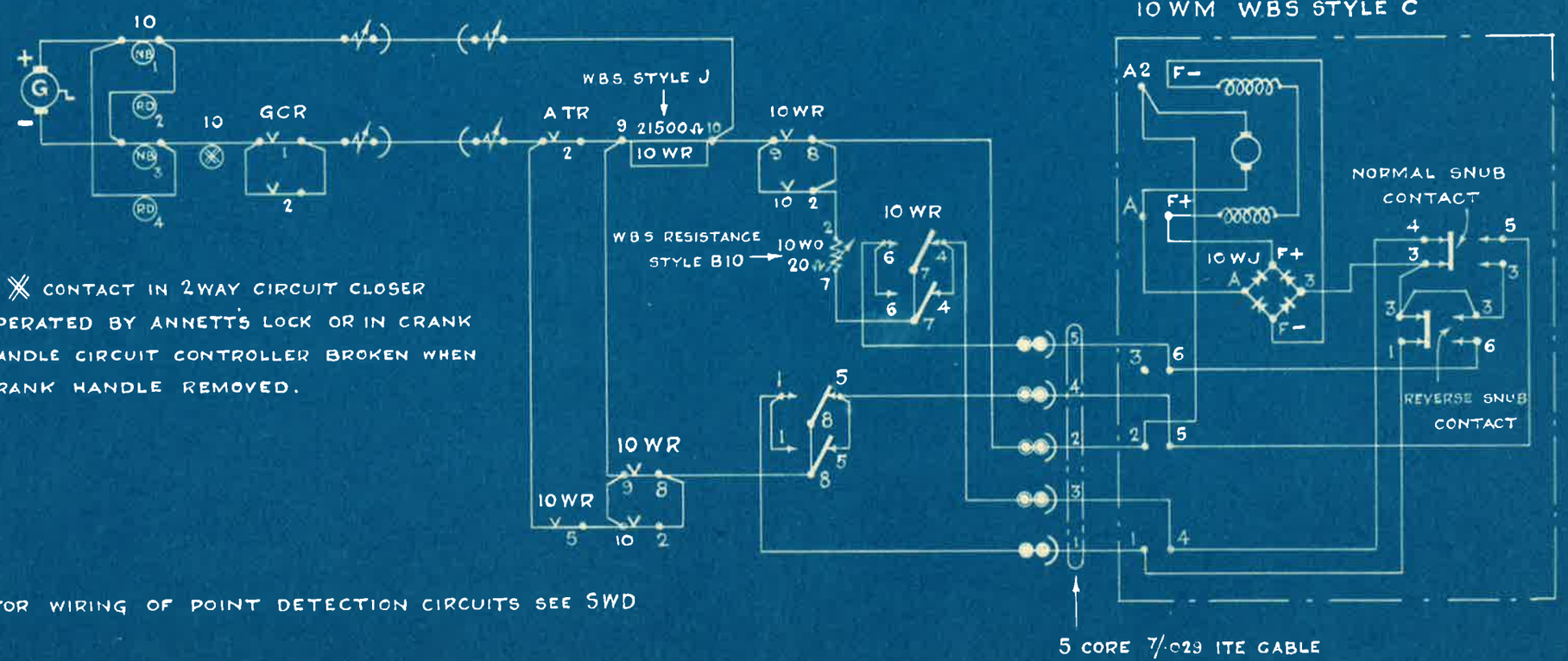

※ CONTACT IN 2WAY CIRCUIT CLOSER OPERATED BY ANNETT'S LOCK OR IN CRANK HANDLE CIRCUIT CONTROLLER BROKEN WHEN CRANK HANDLE REMOVED.

FOR WIRING OF POINT DETECTION CIRCUITS SEE SWD

L.N.E.R. SOUTHERN AREA.
CHIEF TELEGRAPH ENGINEER'S OFFICE
KINGS CROSS STATION N.1.

DRAWN BY
TRACED BY C.E.P.
CHECKED
DATE 22-4-43.

SWD 28A

STANDARD WIRING DIAGRAM

STANDARD WIRING DIAGRAM

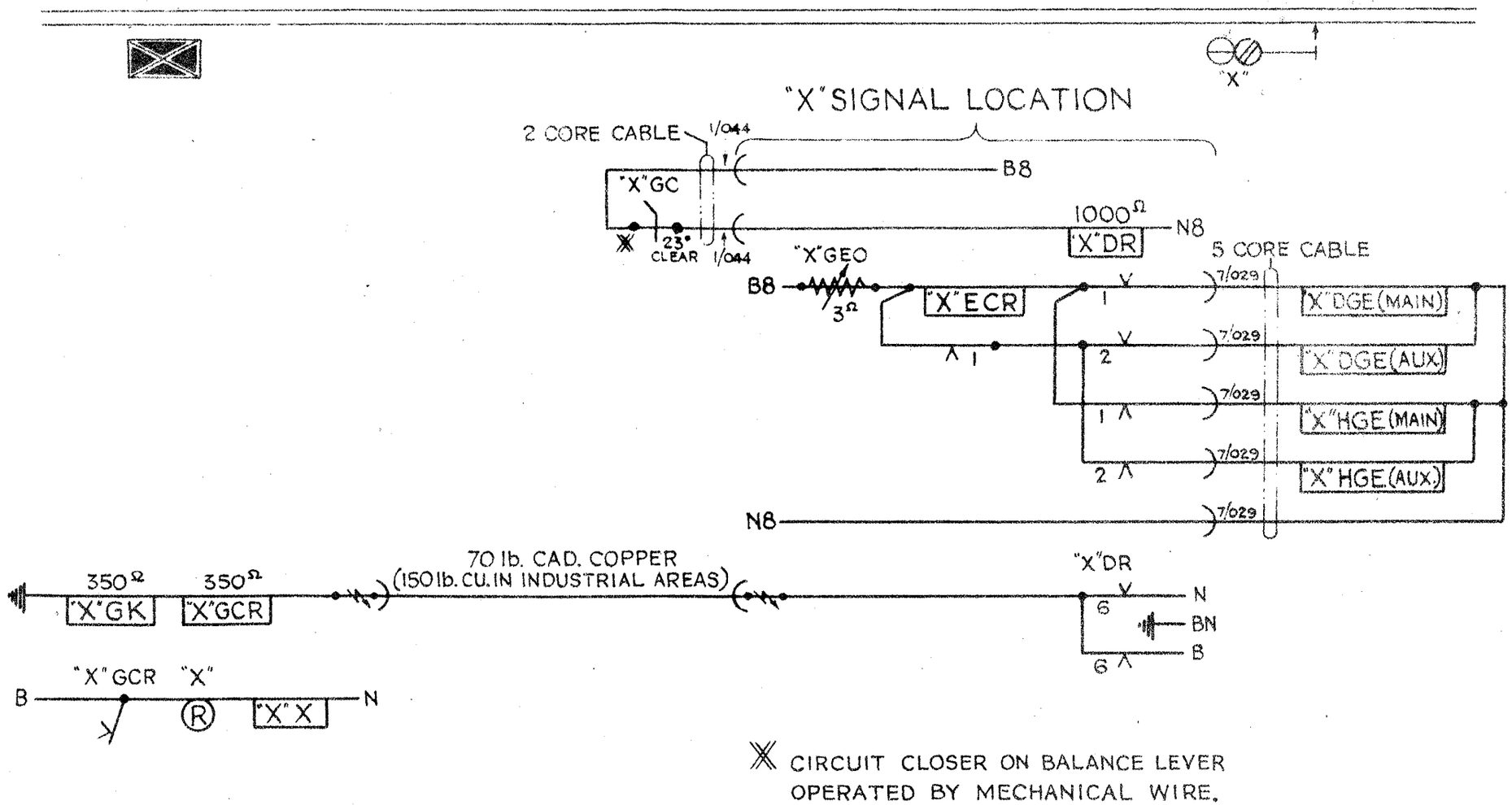

✕ CIRCUIT CLOSER ON BALANCE LEVER OPERATED BY MECHANICAL WIRE.

COLOUR LIGHT SIGNALS

OPERATED BY MECHANICAL WIRE

MULTI-UNIT TYPE

L.N.E.R. SOUTHERN AREA.
SIGNAL & TELEGRAPH ENGINEER'S OFFICE
KINGS CROSS STATION, N.1.

DRAWN BY J.R.McL
TRACED BY T.W.E.
CHECKED BY
DATE

S.W.D 30

STANDARD WIRING DIAGRAM

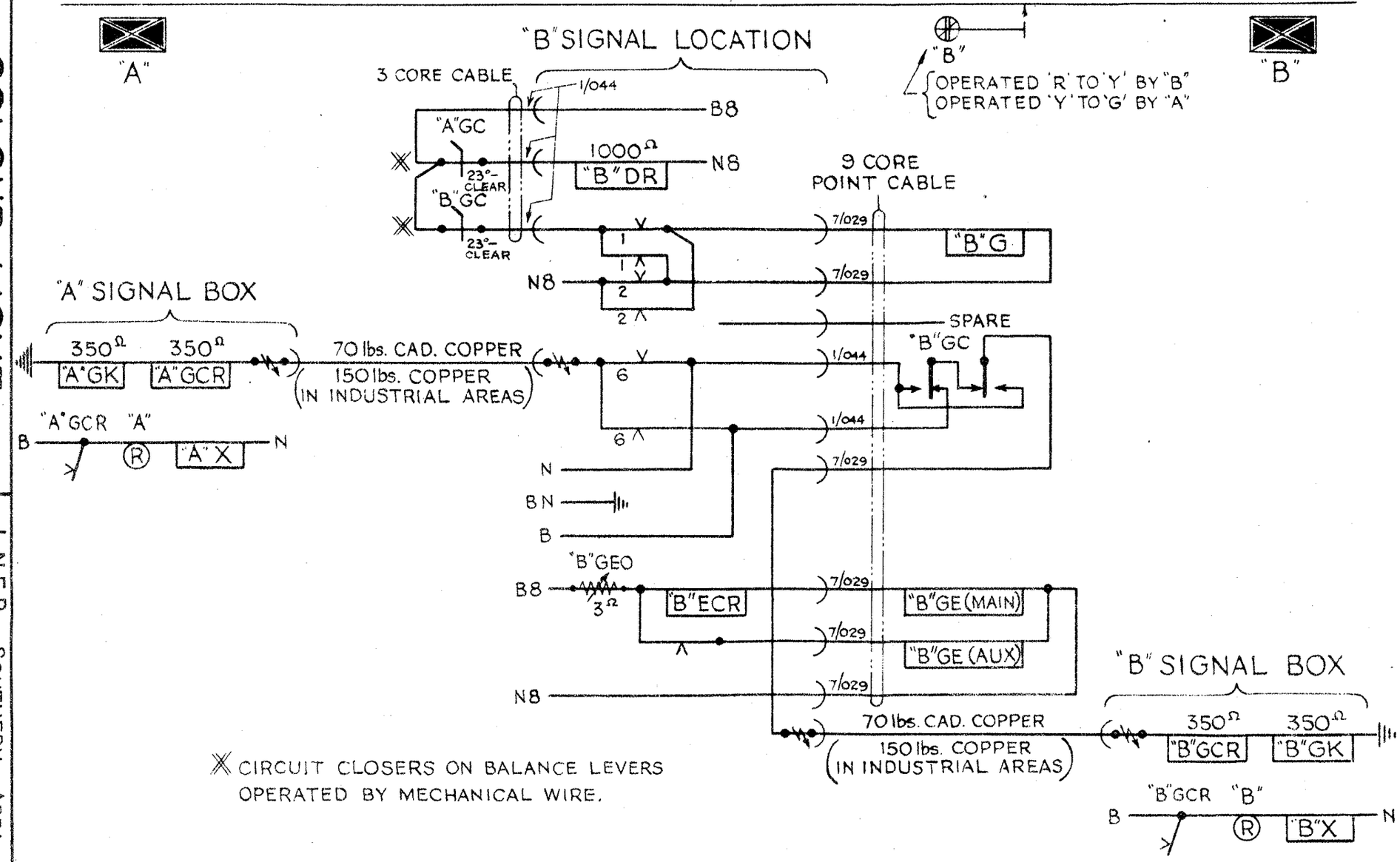

※ CIRCUIT CLOSERS ON BALANCE LEVERS OPERATED BY MECHANICAL WIRE.

COLOUR LIGHT SIGNALS

OPERATED BY MECHANICAL WIRE

SEARCHLIGHT TYPE

L.N.E.R. SOUTHERN AREA.
SIGNAL & TELEGRAPH ENGINEER'S OFFICE
KINGS CROSS STATION, N.1.

DRAWN BY J.R.McL
TRACED BY T.W.E.
CHECKED BY
DATE

S.W.D.31

STANDARD WIRING DIAGRAM

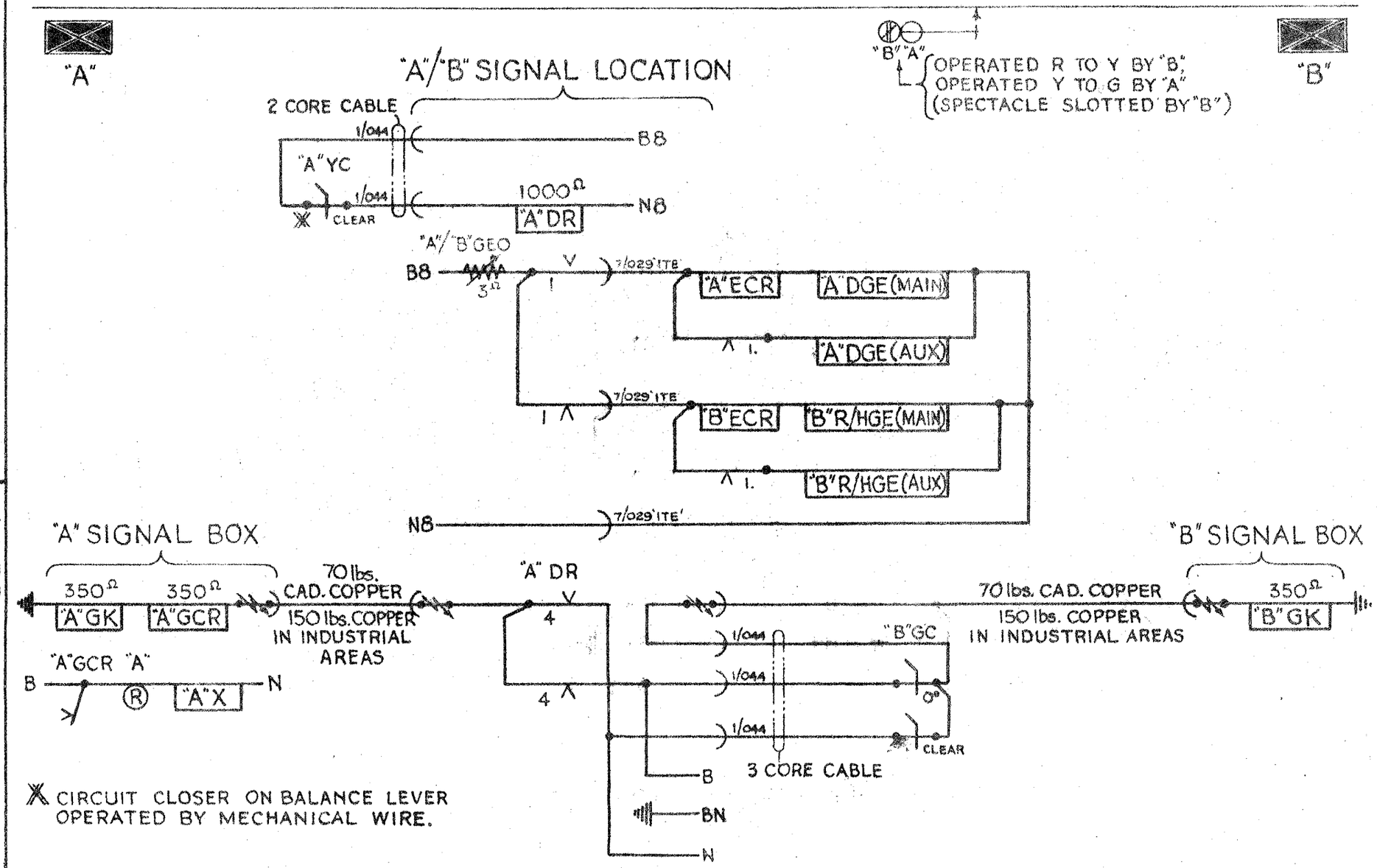

COLOUR LIGHT SIGNALS

OPERATED BY MECHANICAL WIRE

"ADLAKE" TYPE

L.N.E.R. SOUTHERN AREA.
SIGNAL & TELEGRAPH ENGINEERS OFFICE
KINGS CROSS STATION. N.1.

DRAWN BY J.R.McL
TRACED BY T.W.E.
CHECKED BY
DATE

S.W.D. 32

STANDARD WIRING DIAGRAM

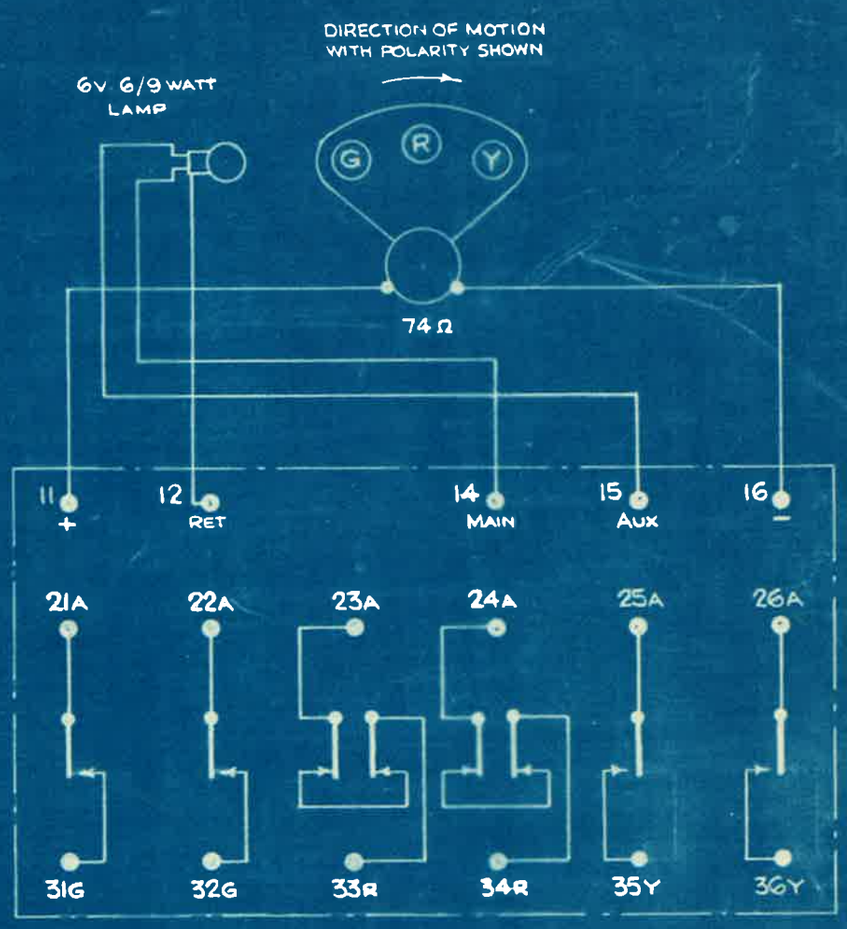

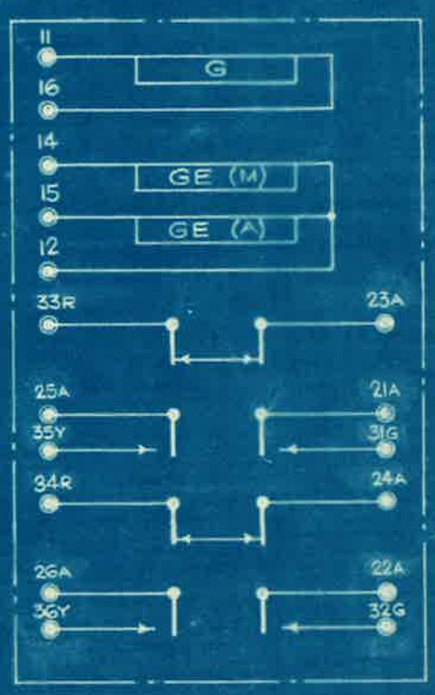

G.R.S. TYPE SA. SEARCHLIGHT SIGNAL.

WITH TWO SETS OF PROVING CONTACTS.

INTERNAL CONNECTIONS.

L.N.E.R. SOUTHERN AREA.
SIGNAL & TELEGRAPH ENGINEER'S OFFICE
KINGS CROSS STATION. N.1.

DRAWN BY	SWD 33
TRACED BY	
CHECKED BY	DATE 3.8.44

STANDARD WIRING DIAGRAM

A

Where Separate Return is provided.

B

Where Common Return is used.

BANNER REPEATER SIGNAL.

L.N.E.R. SOUTHERN AREA.
SIGNAL & TELEGRAPH ENGINEER'S OFFICE
KINGS CROSS STATION, N.1.

DRAWN BY J.R.McL.
TRACED BY J.O.G.
CHECKED BY

SWD40

DATE 12-12-42

STANDARD WIRING DIAGRAM

Type F

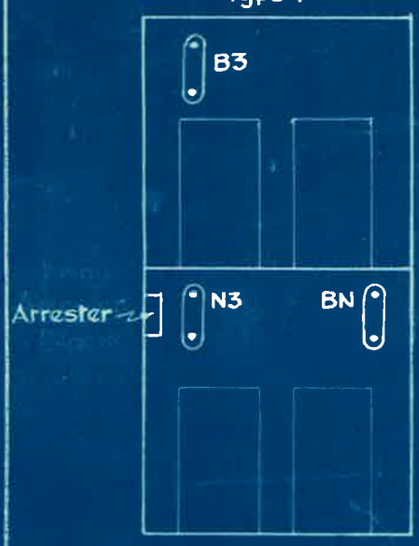

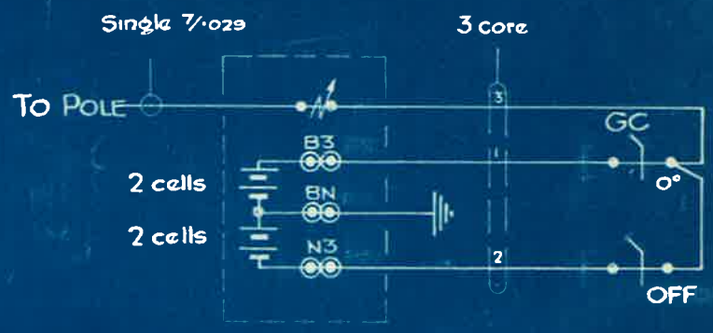

Type E

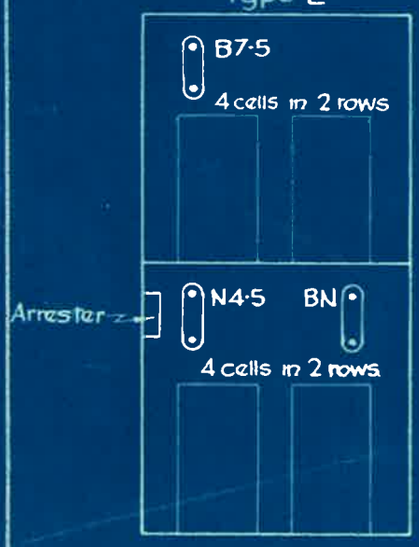

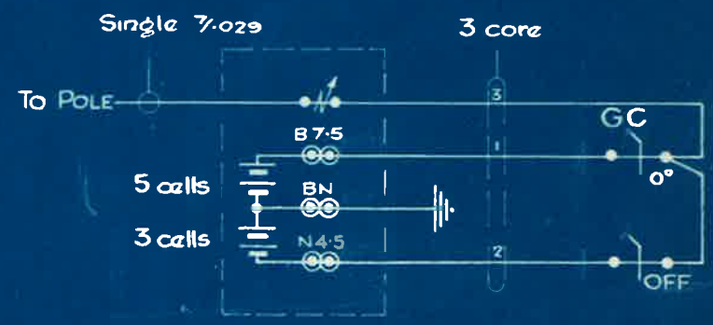

Type D

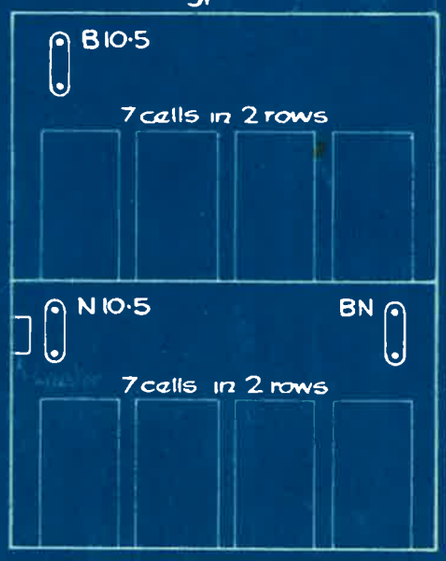

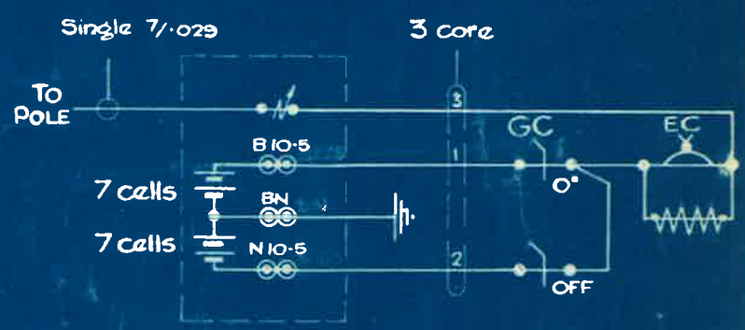

APPARATUS CUPBOARDS.

ARRANGEMENT OF REPEATER BATTERIES AND CABLING.

L.N.E.R. SOUTHERN AREA.
SIGNAL & TELEGRAPH ENGINEER'S OFFICE
KINGS CROSS STATION, N.1.

DRAWN BY	S.W.D. 41
TRACED BY	
CHECKED BY	DATE 3.12.42.

STANDARD WIRING DIAGRAM

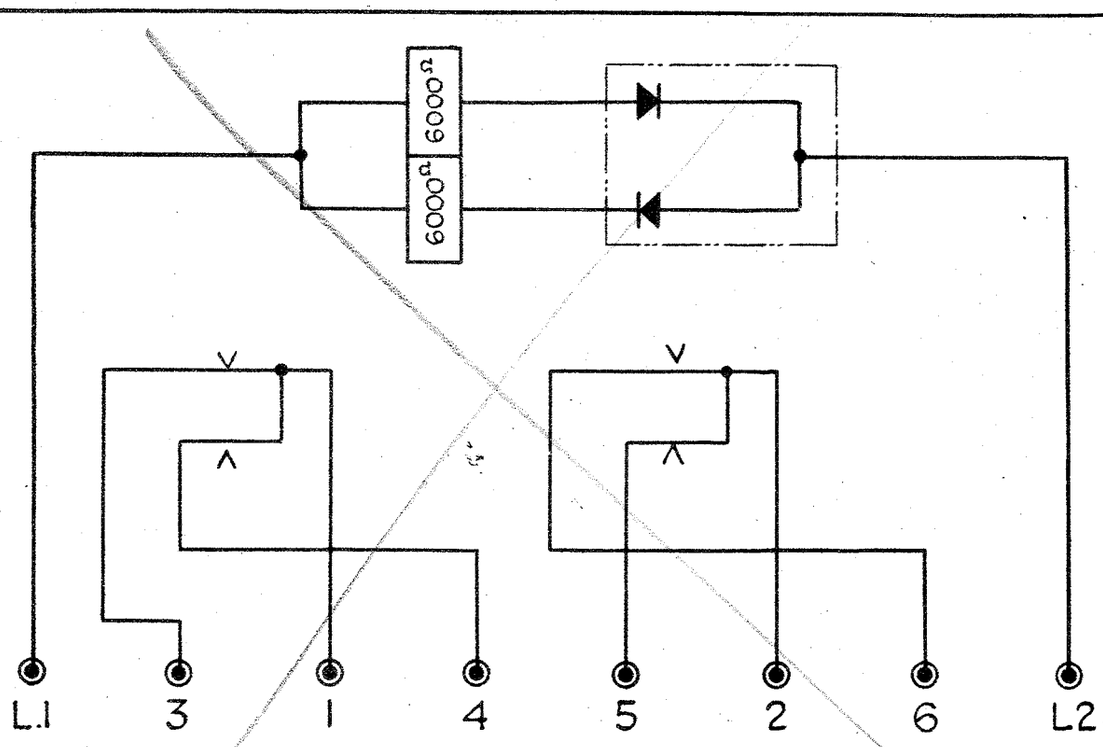

110v. TYPE

S.T.C. APPARATUS UNIT No. 4006A

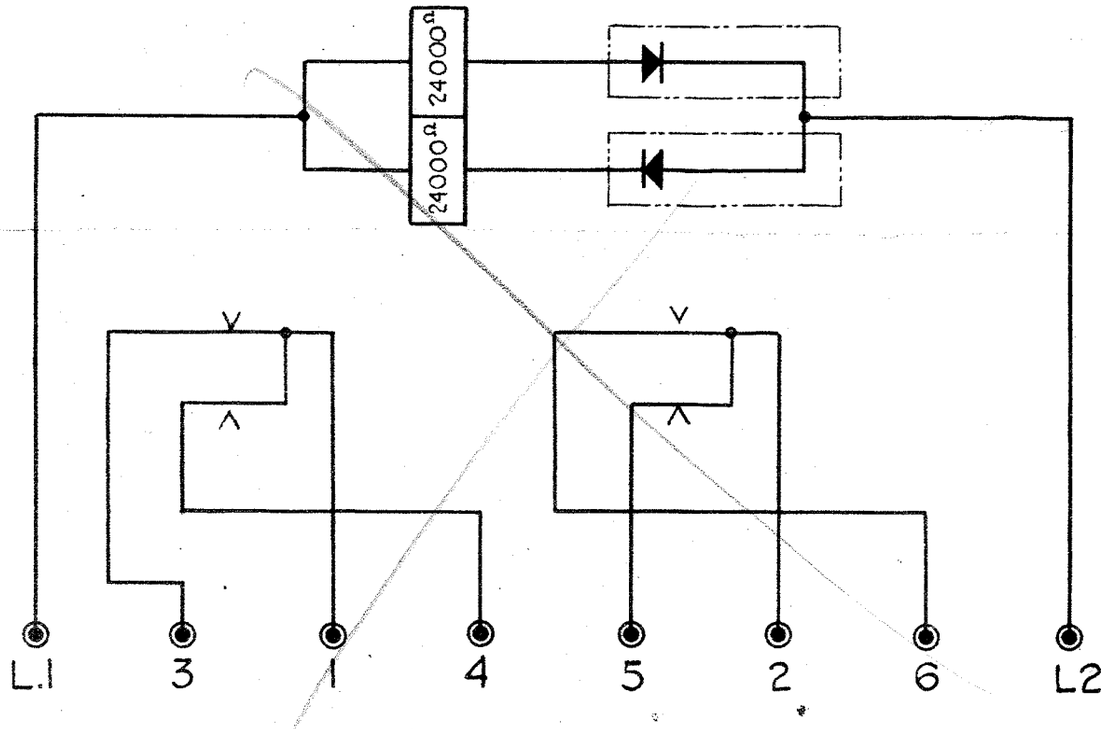

230v. TYPE

S.T.C. APPARATUS UNIT No. 4006B

"POWER OFF" RELAYS

STANDARD TELEPHONE & CABLE Co's TYPES

L.N.E.R. SOUTHERN AREA. SIGNAL & TELEGRAPH ENGINEER'S OFFICE KINGS CROSS STATION. N.1.	
DRAWN BY S.T.&C. LTD	S.W.D.45
TRACED BY T.W.E.	
CHECKED BY	DATE 14. 5. 41.

STANDARD WIRING DIAGRAM

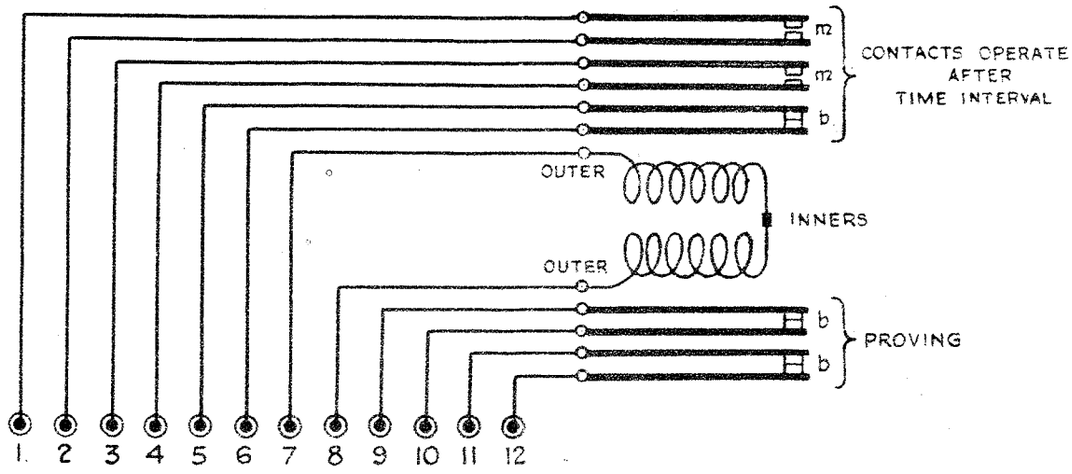

RESISTANCE OF COILS :- 10Ω + 10Ω

12v. TYPE

S.T.C. APPARATUS UNIT No. 4004A

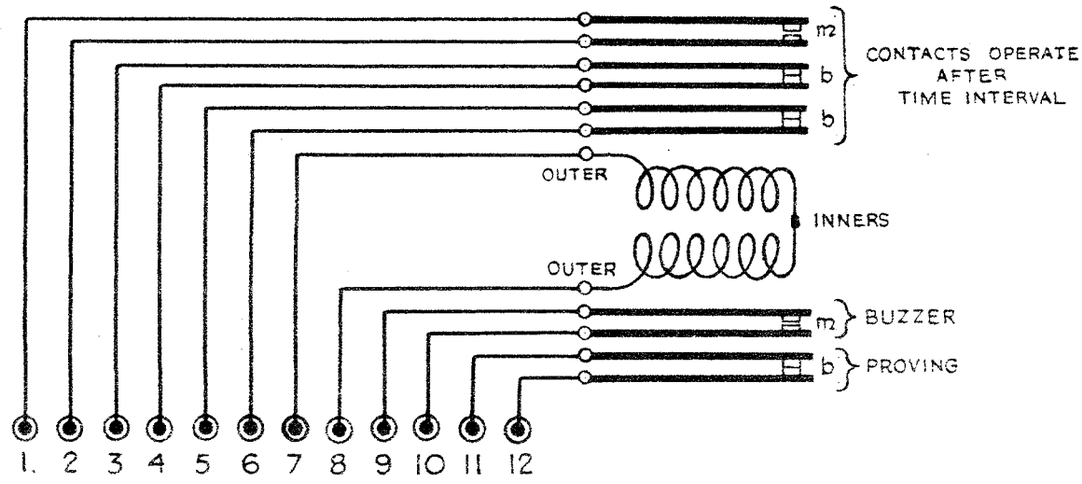

RESISTANCE OF COILS :- 150Ω + 150Ω

50v. TYPE

S.T.C. APPARATUS UNIT No. 4004B

TIME RELAYS

STANDARD TELEPHONE & CABLE CO'S. TYPES

L.N.E.R. SOUTHERN AREA.

SIGNAL & TELEGRAPH ENGINEER'S OFFICE
KINGS CROSS STATION, N.1.

DRAWN BY S.T.&C LTD.	S.W.D.47
TRACED BY T.W.E.	
CHECKED BY	DATE 16. 5. 41.

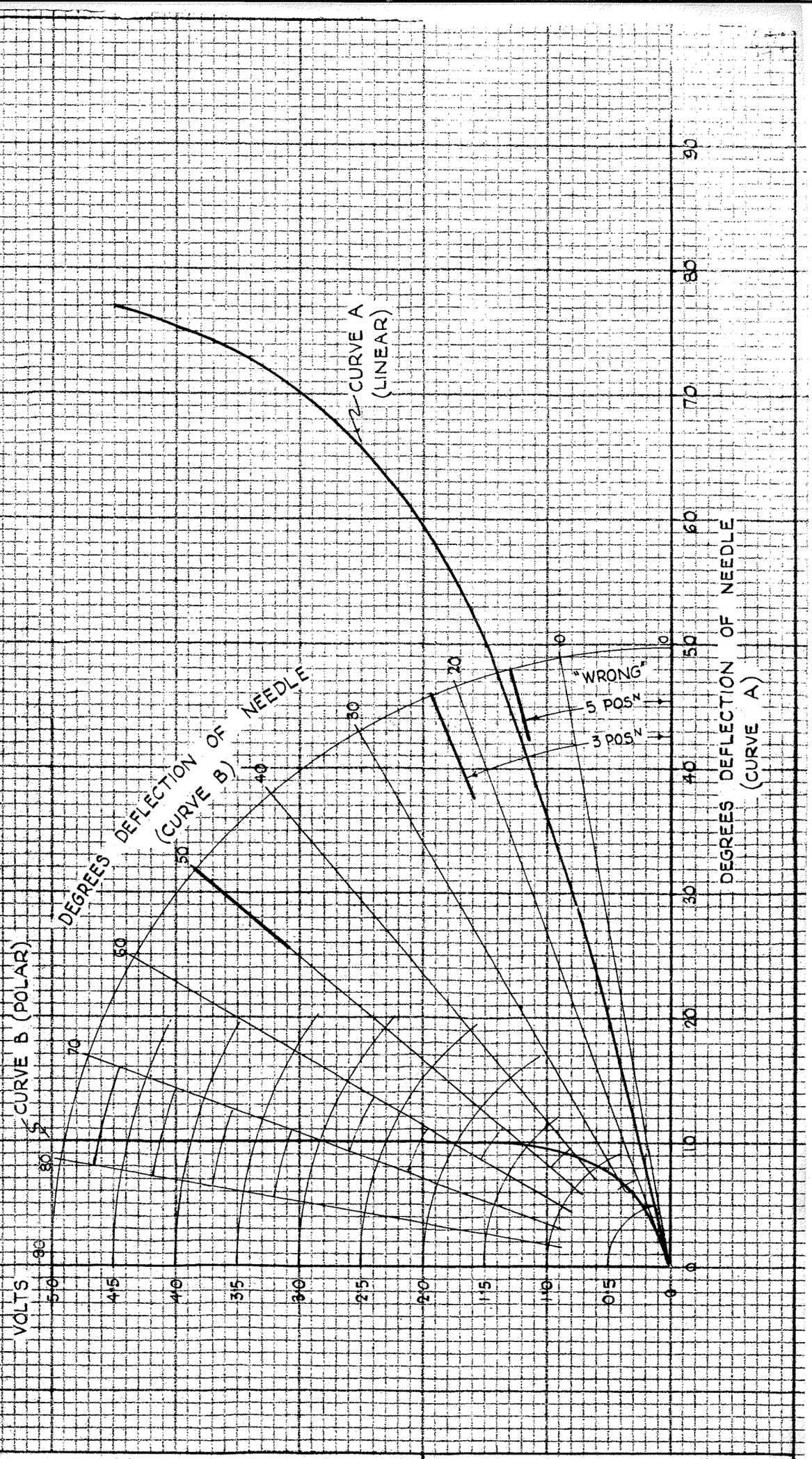

UNIVERSAL INDICATOR
350Ω CENTRE BALANCED
DEFLECTION CURVES

L.N.E.R. SOUTHERN AREA
SIGNAL & TELEGRAPH ENGINEERS OFFICE
KINGS CROSS STATION N.1.

DRAWN BY tah	SWD 49
TRACED BY tah	
CHECKED BY [illegible]	DATE 7.8.41.

STANDARD WIRING DIAGRAM

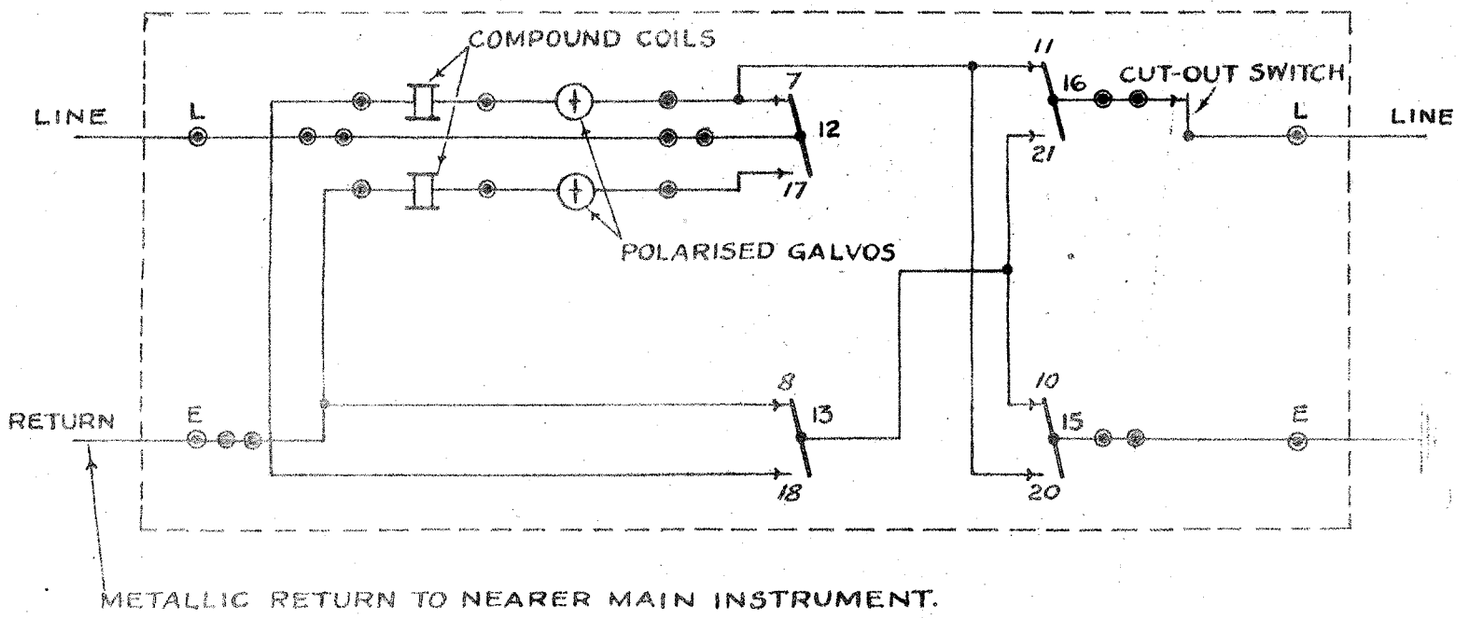

12, 13 } OPERATED WHEN STAFF LIFTED. RETURNS TO POSITION SHEWN WHEN STAFF WITHDRAWN.

15, 16 } OPERATED AUTOMATICALLY WHEN STAFF TAKEN OUT OR REPLACED.

L.N.E.R. SOUTHERN AREA.

ELEC. TRAIN STAFF INSTRUMENTS.

WIRING OF WEBB & THOMPSON LARGE TYPE SUBSIDIARY INSTRUMENT.

L.N.E.R. SOUTHERN AREA.
SIGNAL & TELEGRAPH ENGINEER'S OFFICE
KINGS CROSS STATION, N.1.

DRAWN BY S.W.S.
TRACED BY S.W.S.
CHECKED BY

SWD 50.

DATE 10-2-42.

STANDARD WIRING DIAGRAM

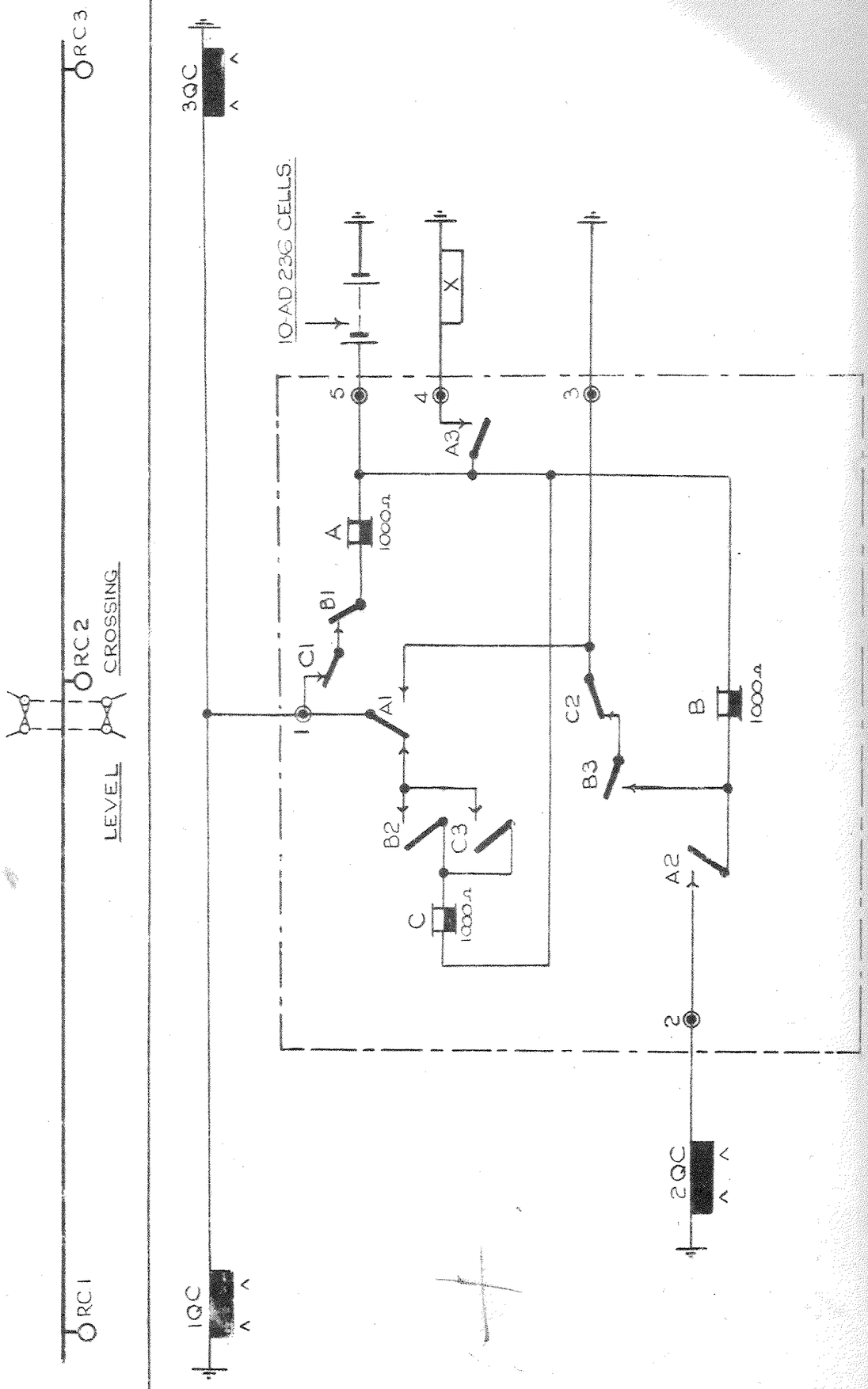

LEVEL CROSSING WARNING BELL

FOR USE ON SINGLE LINES.

RAILWAY EXECUTIVE—EASTERN REGION
SIGNAL & TELECOMMUNICATIONS ENGINEER
KINGS CROSS STATION, N.1.

DRAWN BY J.R.McL.	SWD 56.
TRACED BY A.P.H.	
CHECKED BY	DATE 30 1 48.

STANDARD WIRING DIAGRAM

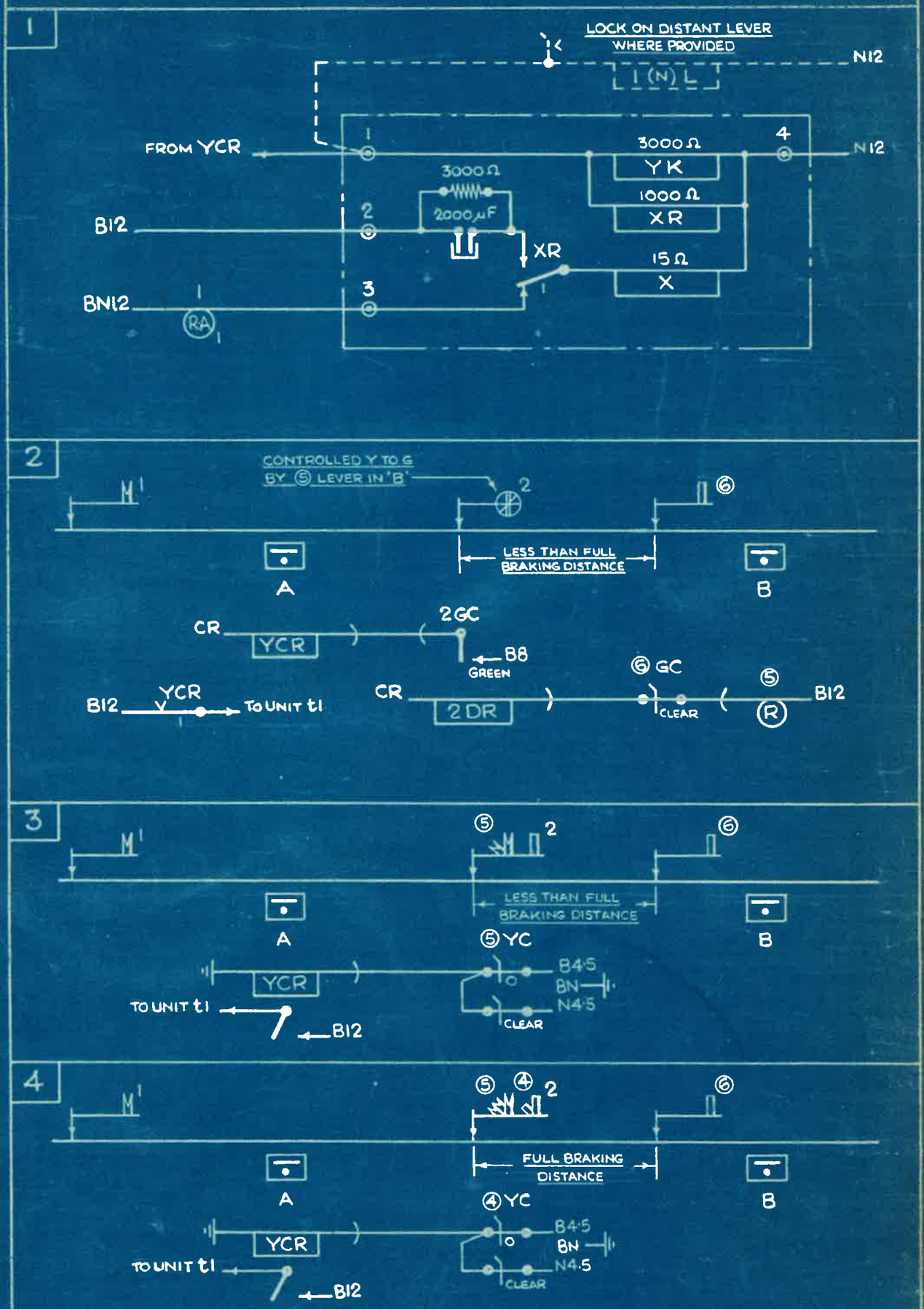

INDICATOR & AUDIBLE WARNING UNIT FOR USE WITH ELECTRICAL DISTANT INDICATOR WORKING

1. WIRING OF UNIT
2.3.4. TYPICAL APPLICATIONS

L.N.E.R. SOUTHERN AREA.
SIGNAL & TELEGRAPH ENGINEER'S OFFICE
KINGS CROSS STATION. N.1.

DRAWN BY
TRACED BY
CHECKED BY

SWD57

DATE 11. 5. 45

STANDARD WIRING DIAGRAM

GENERAL ARRANGEMENT

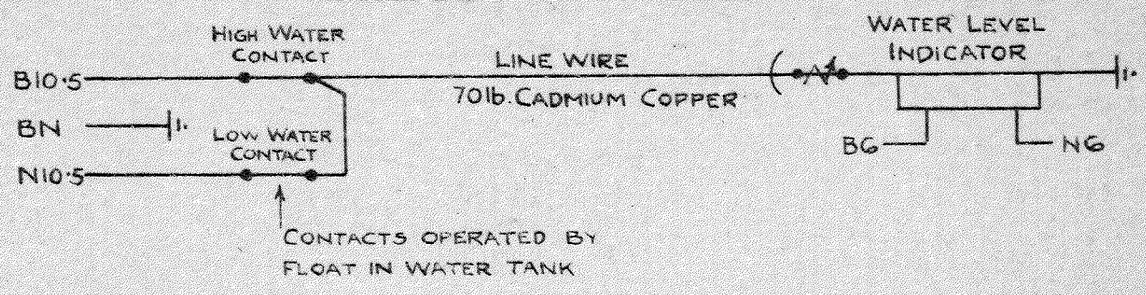

DETAILS OF INDICATOR UNIT

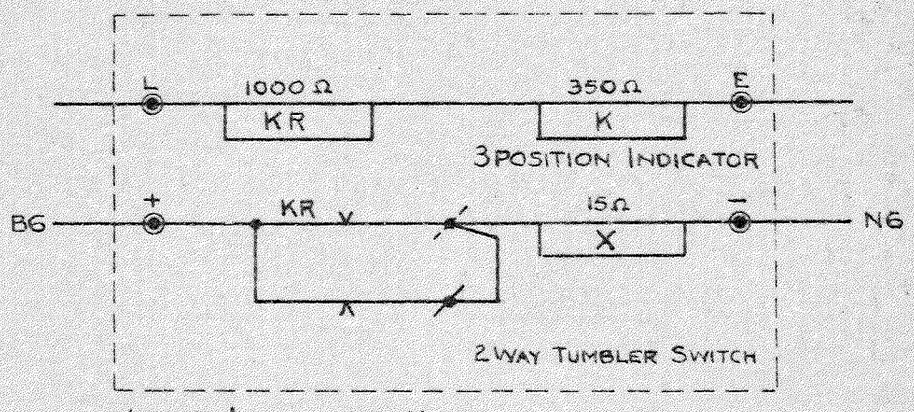

LIGHT INDICATOR UNIT FITTED WITH STANDARD 3 POSITION CENTRE BALANCED INDICATOR, AND CIRCUITS RE-ARRANGED AS SHOWN.

WHERE AVAILABLE, THE CABIN BATTERY IS TO BE TAPPED TO OBTAIN THE 6V. LOCAL SUPPLY.

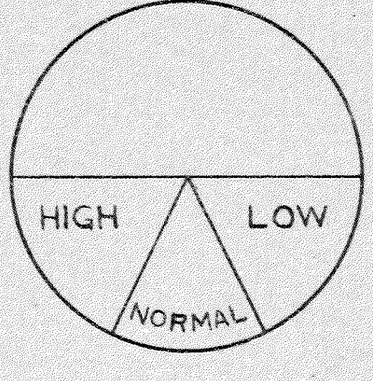

DIAL LETTERING.

WATER LEVEL INDICATOR CIRCUITS.

Copies issued to all C.&S.
2.12.52

L.N.E.R. SOUTHERN AREA.
SIGNAL & TELEGRAPH ENGINEER'S OFFICE
KINGS CROSS STATION. N.1.

DRAWN BY J.O.G.	SWD 58
TRACED BY	
CHECKED BY	DATE 25-7-45

STANDARD WIRING DIAGRAM

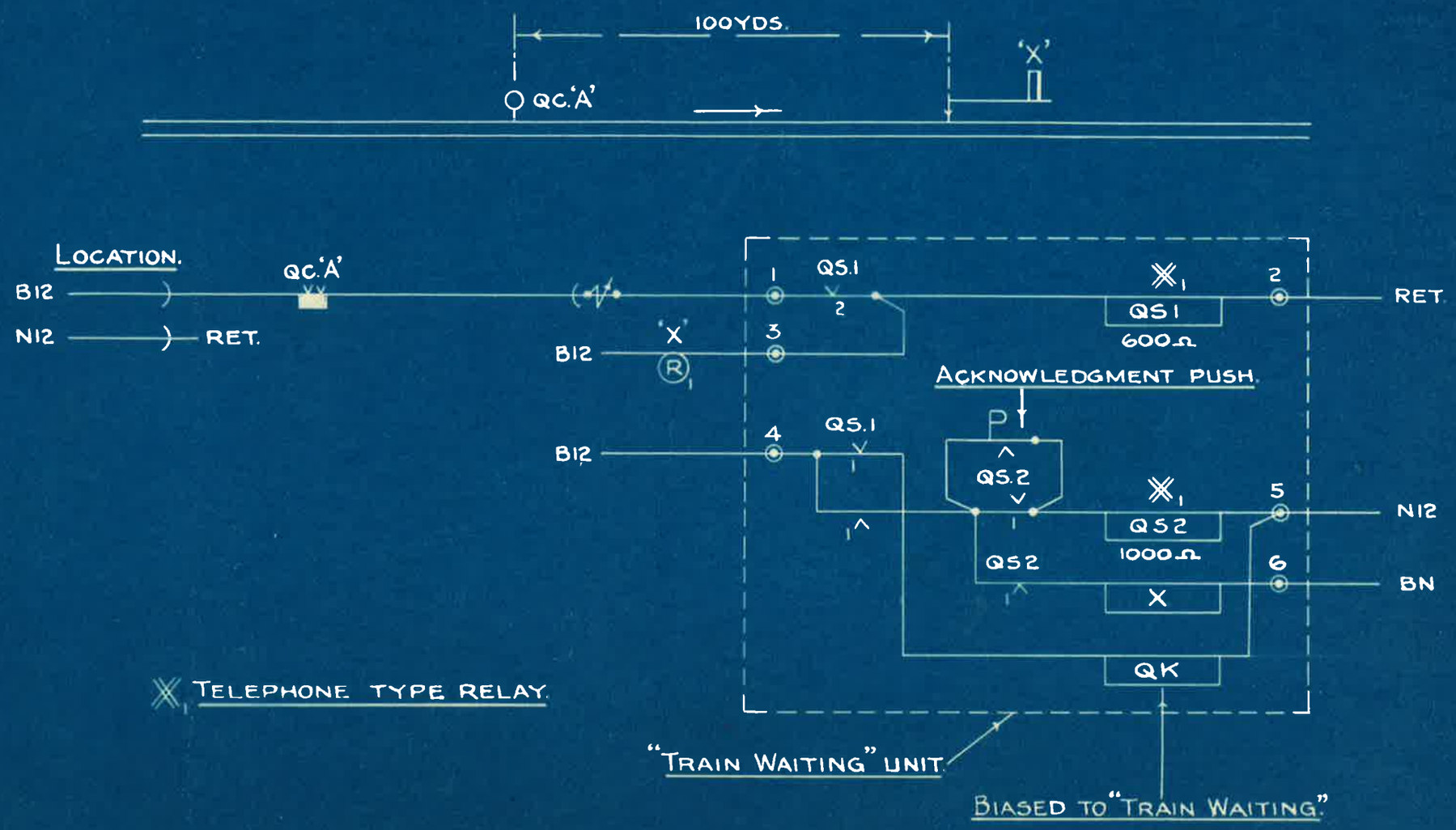

"TRAIN WAITING" UNIT.

L.N.E.R. SOUTHERN AREA.
SIGNAL & TELEGRAPH ENGINEER'S OFFICE
KINGS CROSS STATION, N.1.

DRAWN BY S.W.S.
TRACED BY S.W.S.
CHECKED BY

S.W.D. 59.

DATE 22-11-44

STANDARD WIRING DIAGRAM

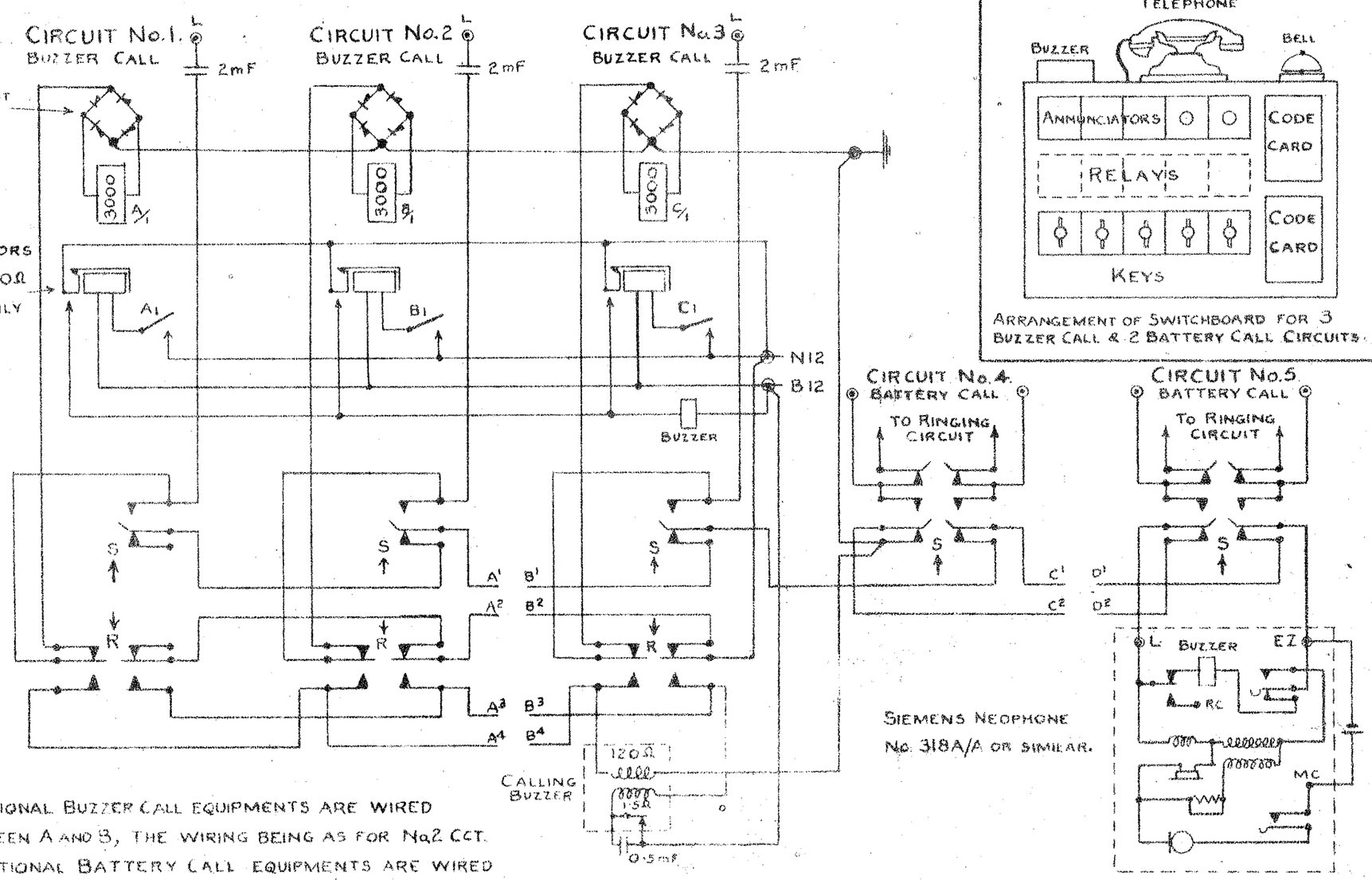

ARRANGEMENT OF SWITCHBOARD FOR 3 BUZZER CALL & 2 BATTERY CALL CIRCUITS.

ADDITIONAL BUZZER CALL EQUIPMENTS ARE WIRED BETWEEN A AND B, THE WIRING BEING AS FOR No.2 CCT.
ADDITIONAL BATTERY CALL EQUIPMENTS ARE WIRED BETWEEN C AND D.
DETAILS OF RINGING FOR BATTERY CALL CIRCUITS IS SHOWN ON WIRING DIAGRAM FOR BOX CONCERNED.

SWITCHBOARD FOR BATTERY & BUZZER CALL TELEPHONE CIRCUITS.

L.N.E.R. SOUTHERN AREA.
SIGNAL & TELEGRAPH ENGINEERS OFFICE
KINGS CROSS STATION. N.1.

DRAWN BY E.A.R.
TRACED BY J.O.G.
CHECKED BY
DATE 5-9-40

SWD60

STANDARD WIRING DIAGRAM

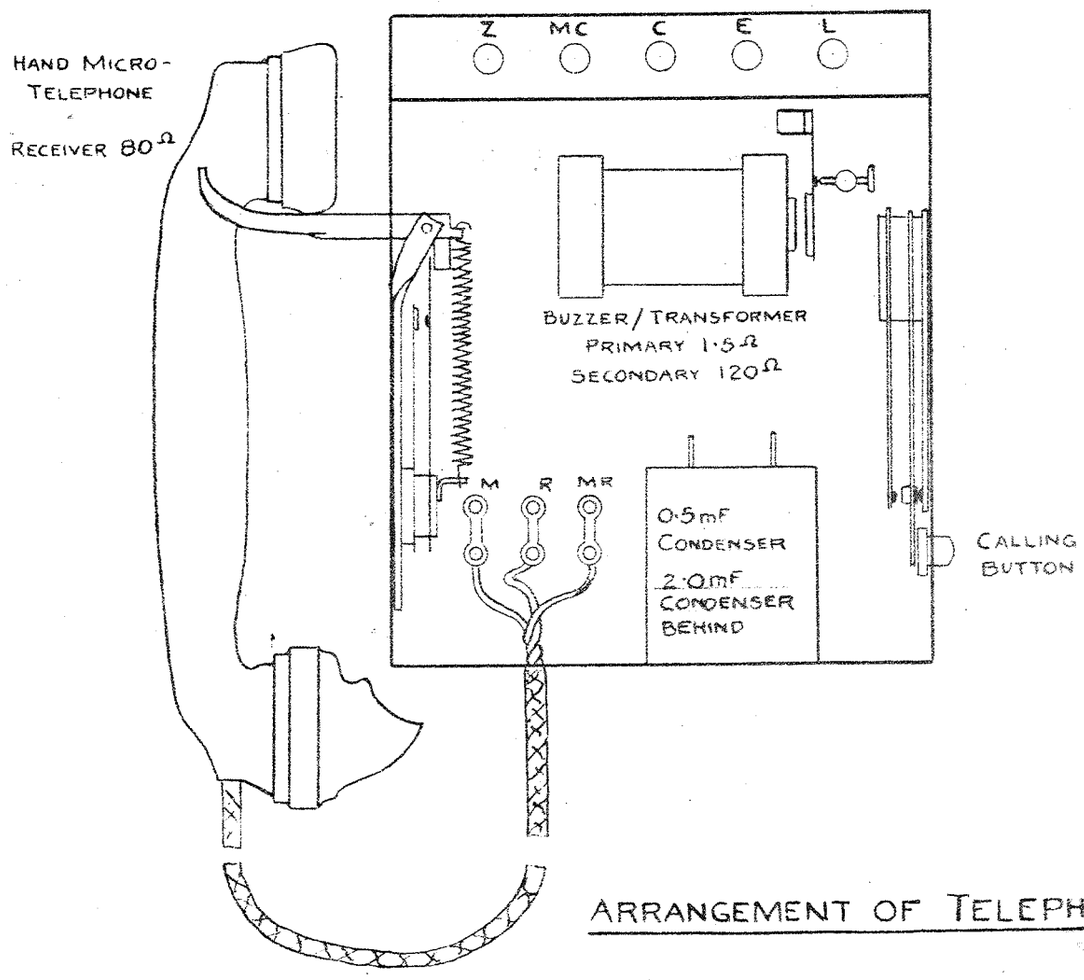

ARRANGEMENT OF TELEPHONE.

SCHEMATIC CIRCUIT.

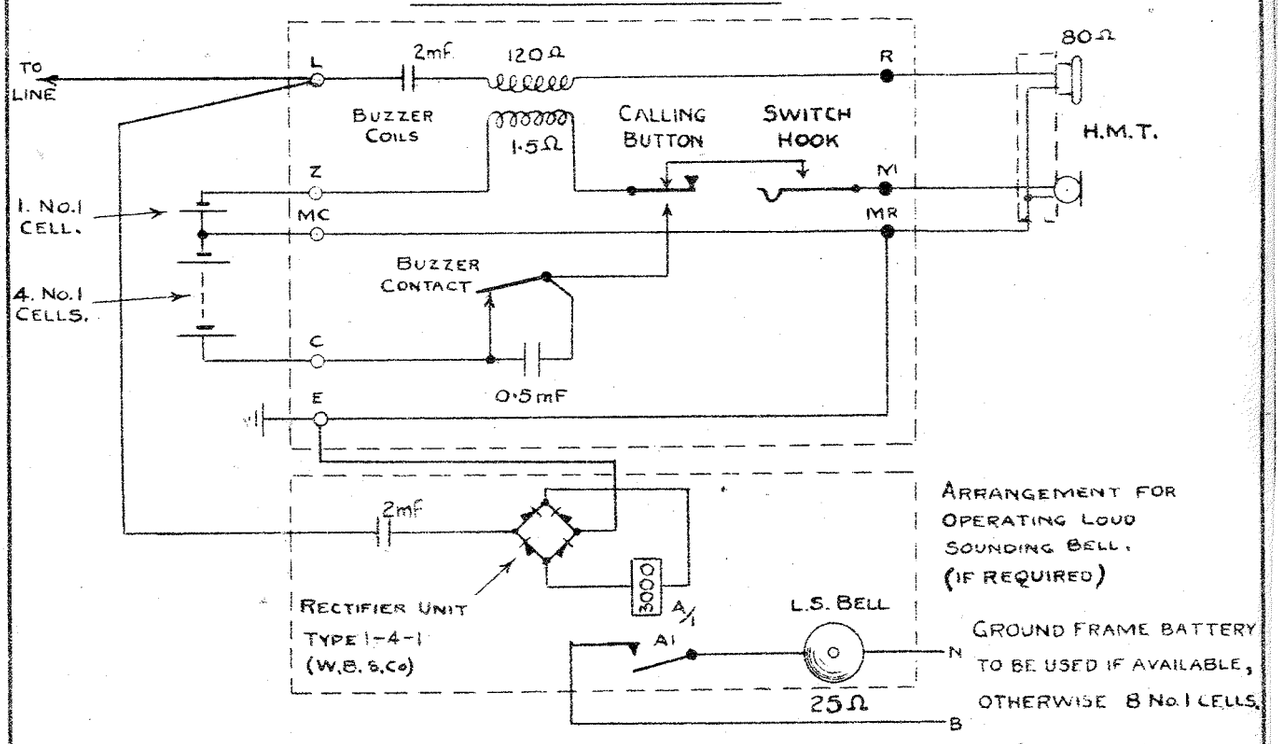

ARRANGEMENT FOR OPERATING LOUD SOUNDING BELL. (IF REQUIRED)

GROUND FRAME BATTERY TO BE USED IF AVAILABLE, OTHERWISE 8 No.1 CELLS.

THIS DIAGRAM SUPERSEDES DRG. No. LV6225.

BUZZER CALL TELEPHONE.

L.N.E.R. SOUTHERN AREA.
SIGNAL & TELEGRAPH ENGINEERS OFFICE
KINGS CROSS STATION. N.1.

DRAWN BY E.A.R.	SWD61.
TRACED BY J.O.G.	
CHECKED BY	DATE 7-9-40.

STANDARD WIRING DIAGRAM

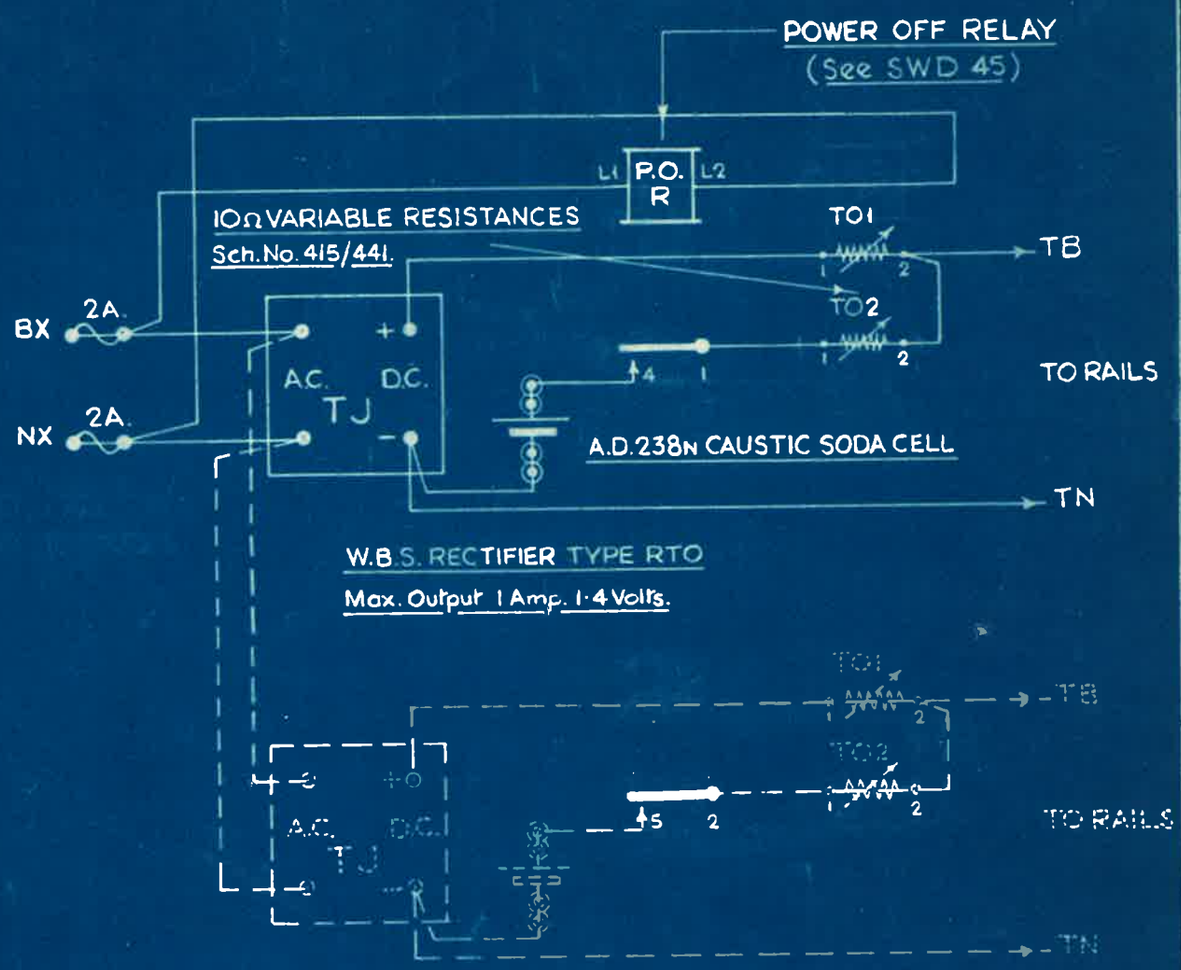

WIRING OF TRACK FEED SETS.

Where two Track Feed Sets are housed in the same Location a common Power Off Relay should be used.
Wiring of second feed shown dotted.

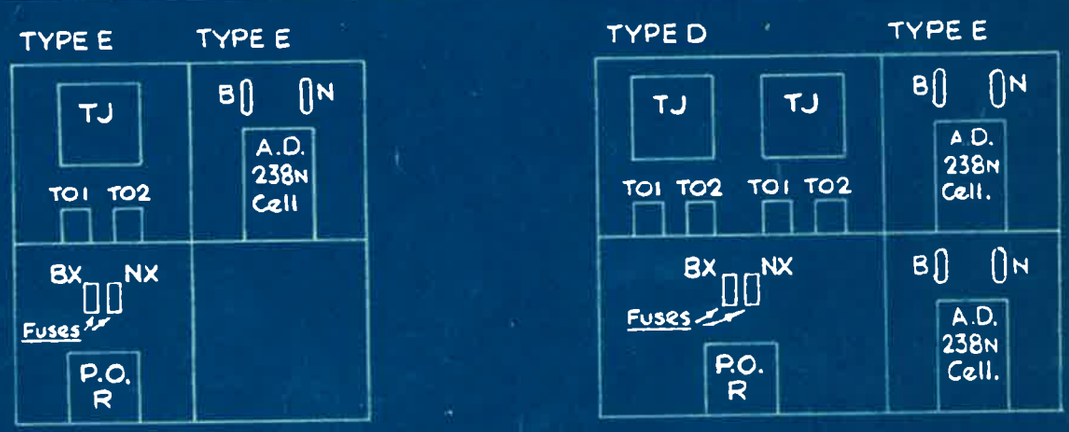

ARRANGEMENT OF APPARATUS.

RECTIFIER FED TRACK CIRCUITS. WITH POWER OFF RELAY & PRIMARY BATTERY STANDBY.	L.N.E.R. SOUTHERN AREA. SIGNAL & TELEGRAPH ENGINEER'S OFFICE KINGS CROSS STATION. N.1.
	DRAWN BY
	TRACED BY
	CHECKED BY
	SWD 66
	DATE 2.12.42.

STANDARD WIRING DIAGRAM

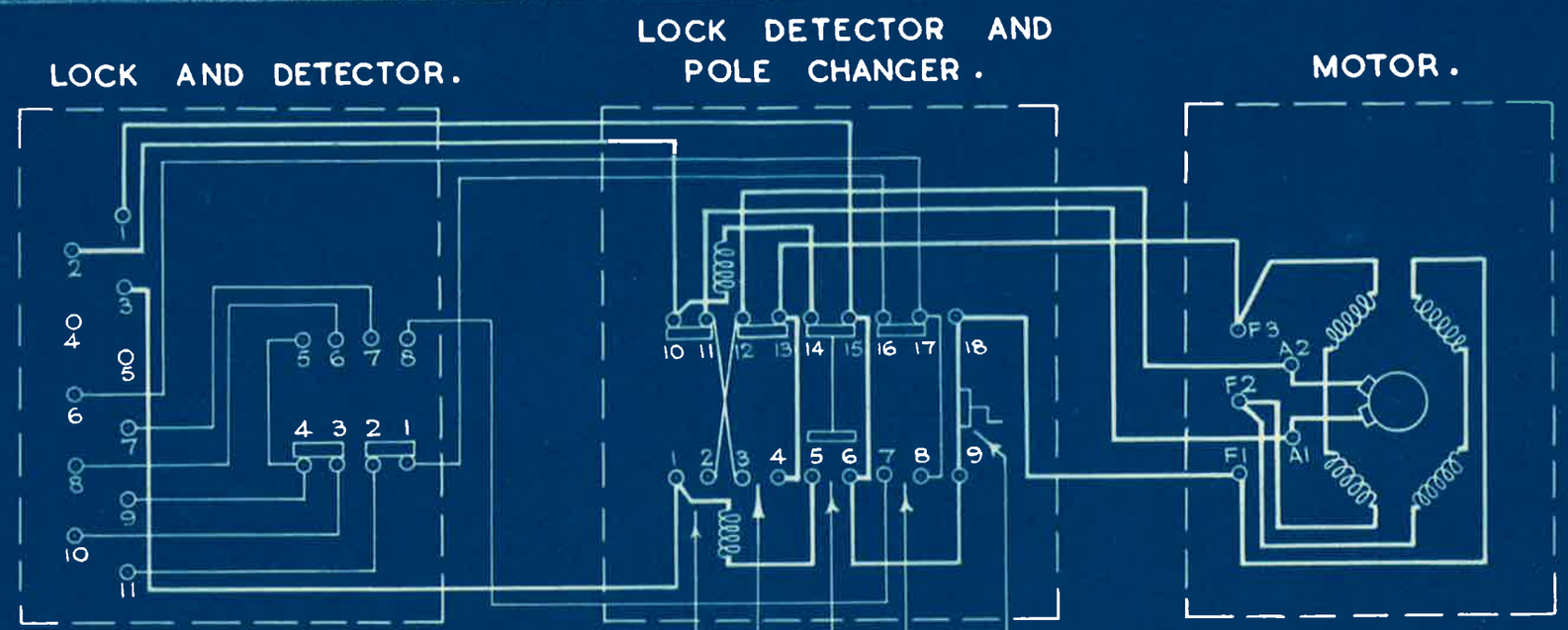

NOTES:-

1. SOLENOID SWITCH CONTACTS BOTH MAKE IMMEDIATELY ON COMMENCEMENT OF STROKE AND CHANGE OVER AT END OF STROKE.
2. POLE CHANGER CONTACTS CHANGE OVER AT END OF STROKE OR ARE PULLED OVER BY THE SOLENOID IF THE MACHINE IS REVERSED DURING STROKE.
3. ISOLATING CONTACT TO BE STRAPPED WHERE INDIVIDUAL HAND CRANKS ARE USED.
4. STROKE OF DRIVE ROD 5".
   STROKE OF LOCK BAR 8½".

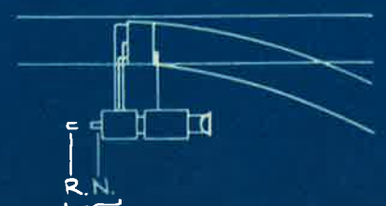

POSITION OF LOCK BAR.

INTERNAL WIRING OF 110 v.
D.C. COMBINED TYPE
POINT MACHINE.
S.G.E. TYPE 1224.

L.N.E.R. SOUTHERN AREA.
SIGNAL & TELEGRAPH ENGINEER'S OFFICE
KING'S CROSS STATION, N.1

DRAWN BY E.A.R.
TRACED BY J.W.
CHECKED BY
DATE 11.6.43.

SWD.80.

STANDARD WIRING DIAGRAM

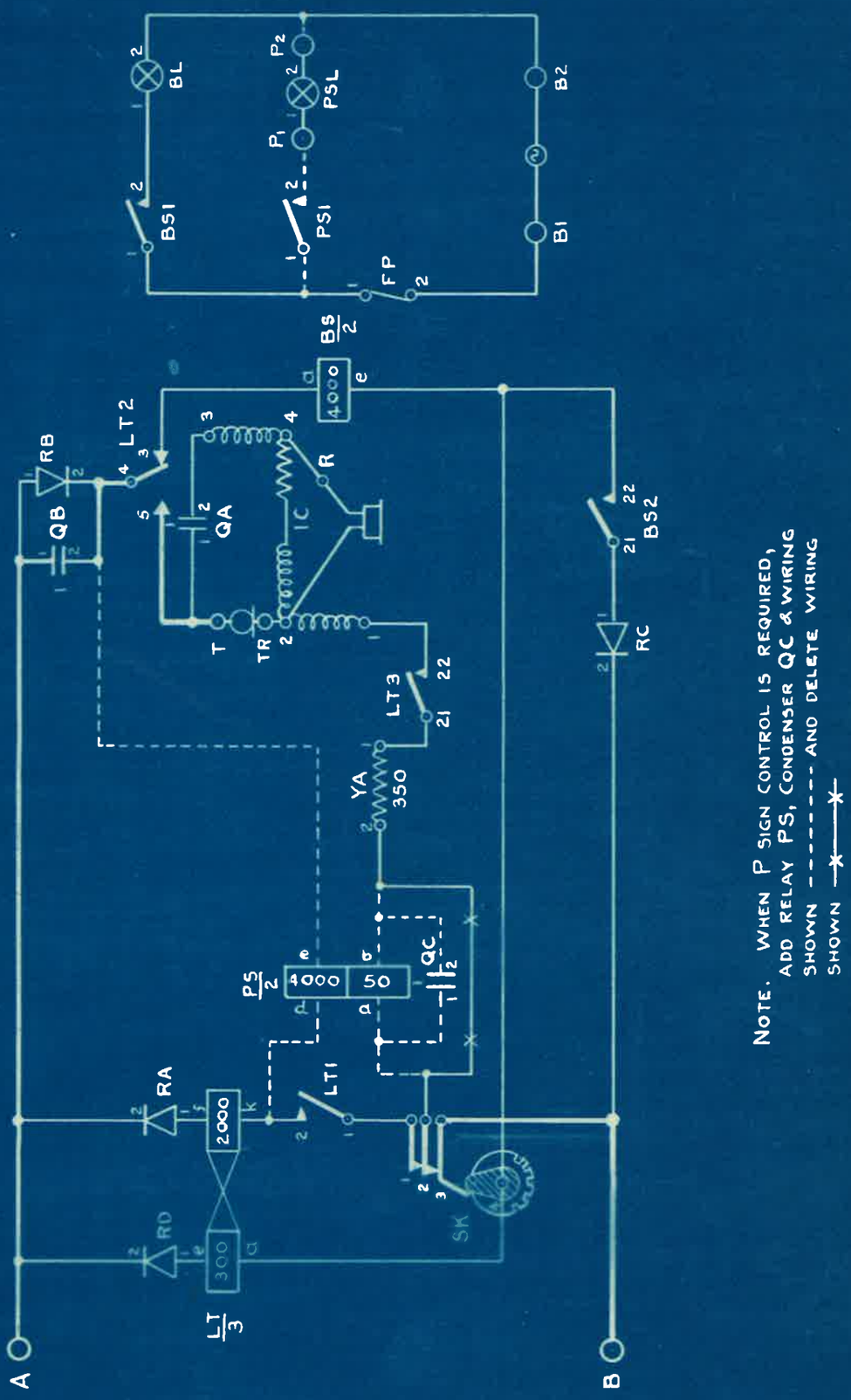

NOTE. WHEN P SIGN CONTROL IS REQUIRED, ADD RELAY PS, CONDENSER QC & WIRING SHOWN - - - - - - - AND DELETE WIRING SHOWN —x—

SIGNAL POST TELEPHONES

S. T. C. Co. WAY STATION SET WITH P SIGN EQUIPMENT.

L.N.E.R. SOUTHERN AREA.
SIGNAL & TELEGRAPH ENGINEER'S OFFICE
KINGS CROSS STATION. N.1.

DRAWN BY	SWD140
TRACED BY J.O.G	
CHECKED BY	DATE 14-1-44.

ORIGINAL No 44CES/A 400/1 2-11-48

A | 8-2-52 | JAS
NOTES 3 & 4 ADDED.

STANDARD WIRING DIAGRAM.

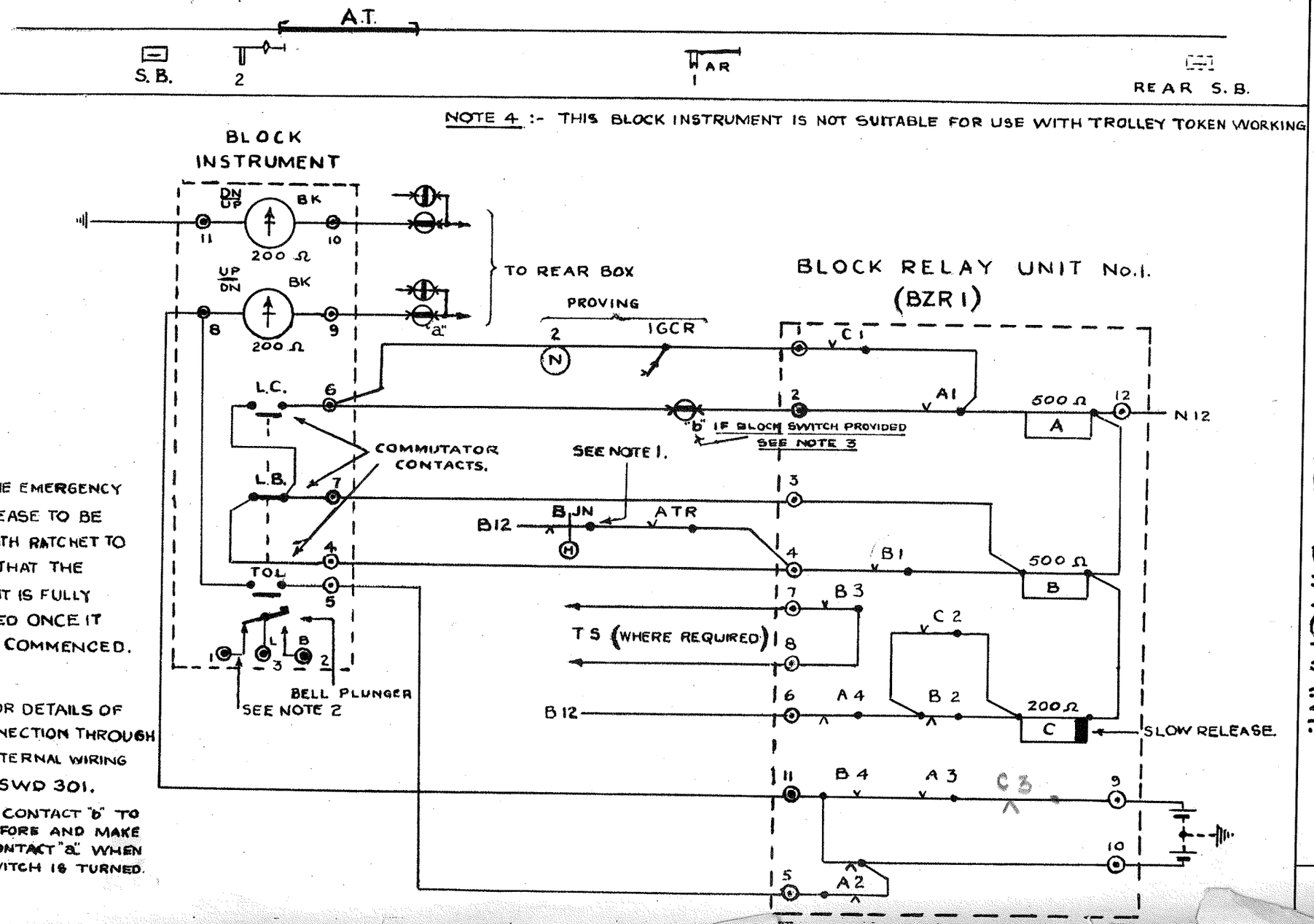

NOTE 1. THE EMERGENCY TIME RELEASE TO BE FITTED WITH RATCHET TO ENSURE THAT THE MOVEMENT IS FULLY COMPLETED ONCE IT HAS BEEN COMMENCED.

NOTE 2. FOR DETAILS OF THIS CONNECTION THROUGH BX SEE INTERNAL WIRING DIAGRAM SWD 301.

NOTE 3 CONTACT "b" TO BREAK BEFORE AND MAKE AFTER CONTACT "a" WHEN BLOCK SWITCH IS TURNED.

3 POSN. S.N. BLOCK.

TRACK CIRCUIT CONTROL WITH ACCEPTANCE EFFECTIVE FOR ONE MOVEMENT ONLY.

RAILWAY EXECUTIVE EASTERN REGION
SIGNAL & TELECOMMUNICATION ENGINEER
KING'S CROSS STATION, N.1.

DRAWN: B Y CHECKED: DATE. 22-9-45.

No. SWD 300. A B.

STANDARD WIRING DIAGRAM

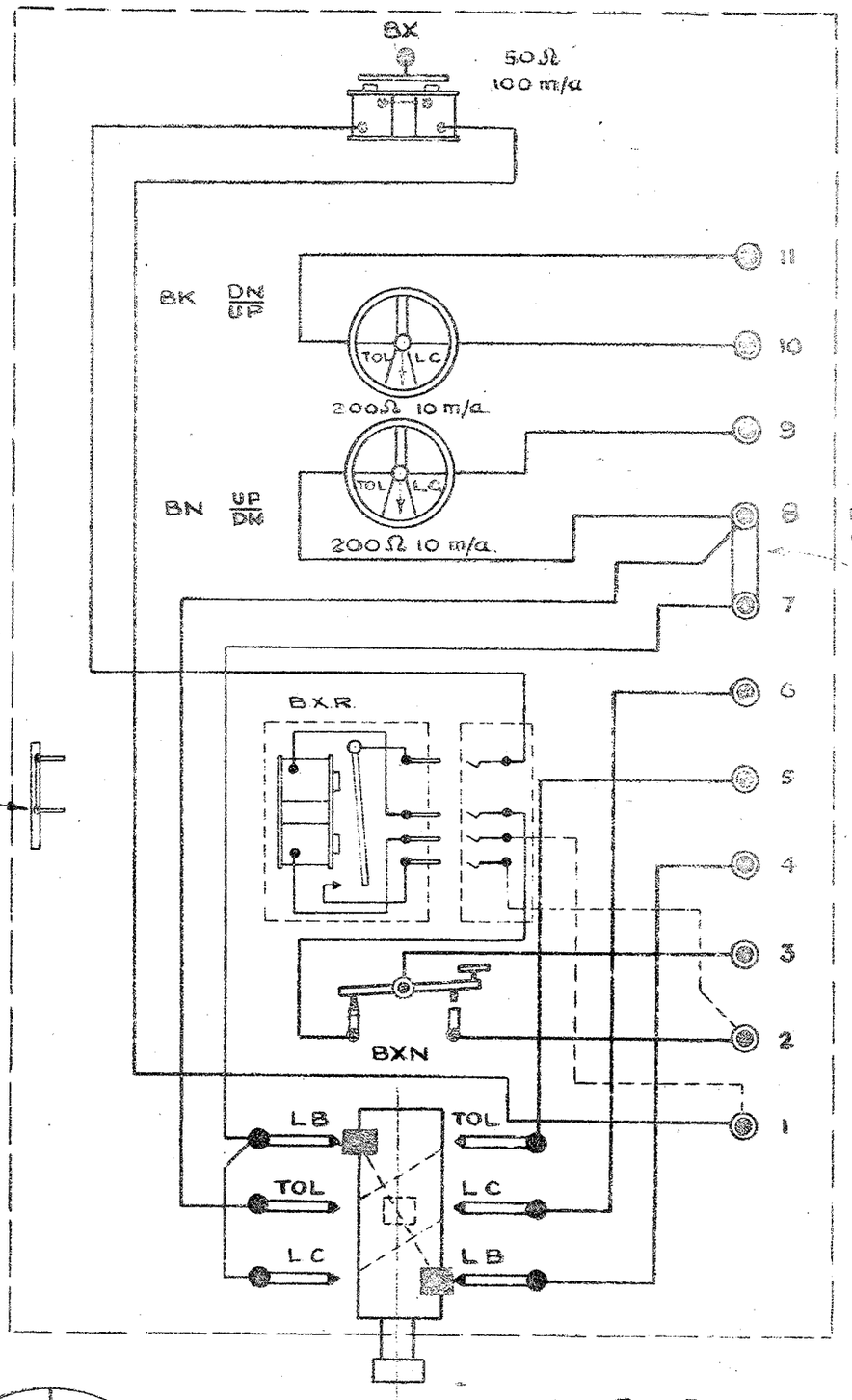

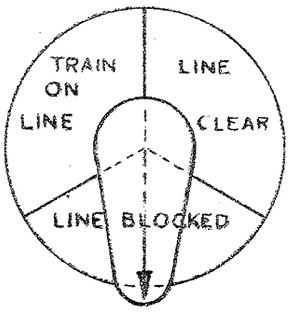

FRONT VIEW
COMMUTATOR PLATE AND HANDLE (NORMAL)

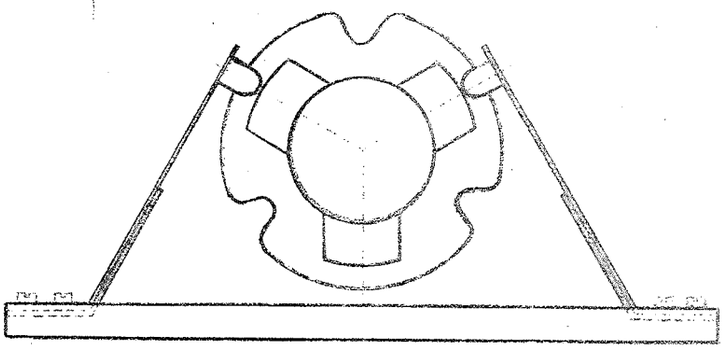

END VIEW
COMMUTATOR BARREL AND SPRINGS. (NORMAL)

3 POS.N S.N. BLOCK.

DOUBLE DIAL INSTRUMENT.

INTERNAL WIRING.

RAILWAY EXECUTIVE EASTERN REGION
SIGNAL & TELECOMMUNICATION ENGINEER.
KING'S CROSS STATION. N.1.

DRAWN: R.Y. CHECKED: DATE. 22-9-45.

No. SWD 301.

ORIGINAL No
44CES/400/2
2-11-48.

STANDARD WIRING DIAGRAM

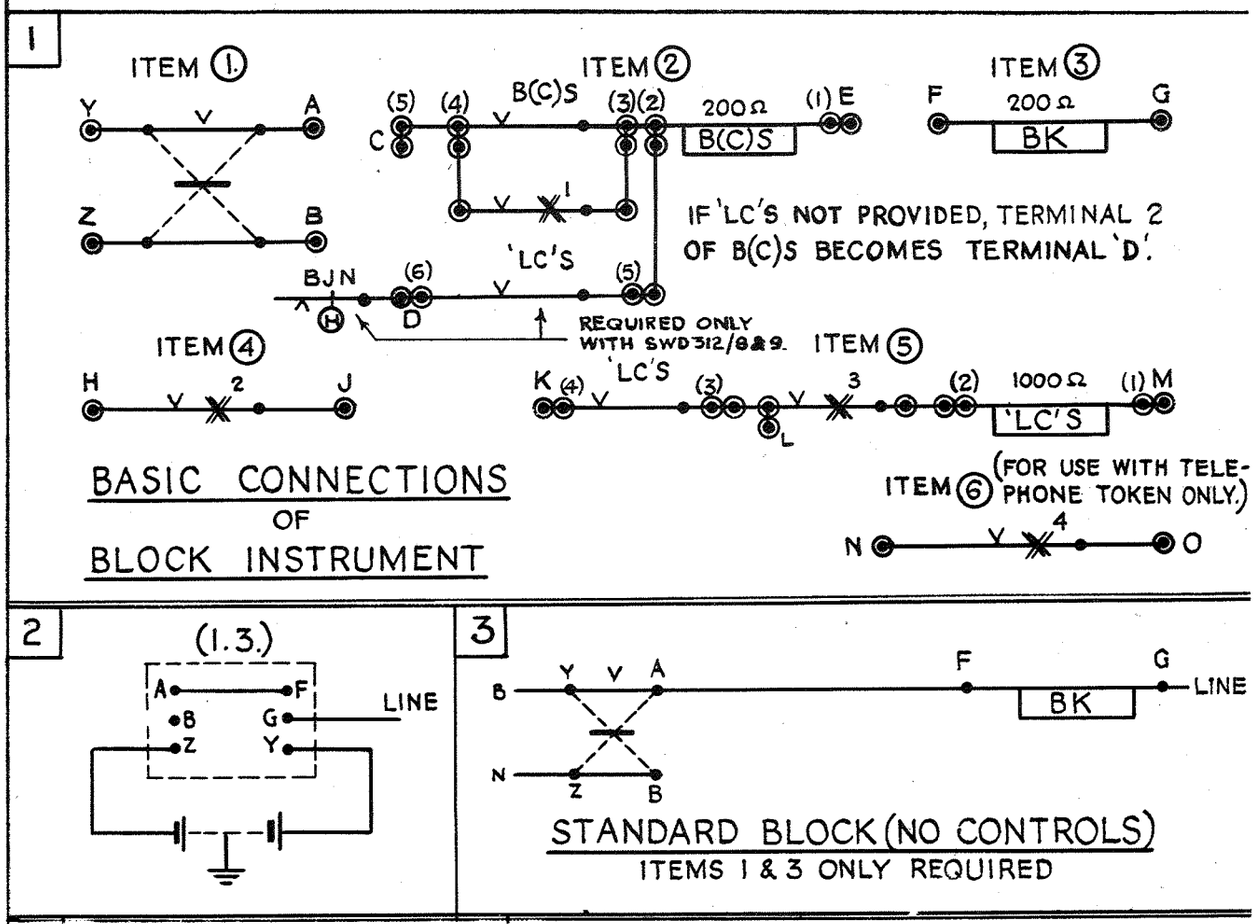

NOTES

$\times^1$ AND $\times^2$ CONTACTS BROKEN WHEN COMMUTATOR IS AT "LINE CLEAR".

$\times^3$ CONTACT BROKEN MOMENTARILY WHEN COMMUTATOR TURNED FROM "LINE CLEAR" TO "LINE BLOCKED" POSITION.

$\times^4$ CONTACT BROKEN WHEN COMMUTATOR IS AT "LINE CLEAR" OR "TRAIN ON LINE".

THE B(C)S AND 'LC'S RELAYS ARE TELEPHONE TYPE RELAYS MOUNTED ON THE BACK OF THE BLOCK INSTRUMENT.

THE B(T)S RELAY IS A STANDARD 1000Ω LINE RELAY 2F/B. 2F CONTACTS, CONTRACT 415, ITEM 380. (SEE S.W.D. 312)

21-9-50	A	12 5 52	J.AS
FORMERLY S.W.D. 11.		B.J.N. & NOTE ADDED IN ITEM 2 PART 1.	

3 WIRE, 3 POSITION SINGLE NEEDLE BLOCK. WIRING OF PEGGER INSTRUMENTS.

L.N.E.R. SOUTHERN AREA.
SIGNAL & TELEGRAPH ENGINEER'S OFFICE
KINGS CROSS STATION. N.1.

DRAWN BY E.A.R.	SWD. 311A
TRACED BY T.W.E.	
CHECKED BY	DATE 20. 9. 40.

STANDARD WIRING DIAGRAM

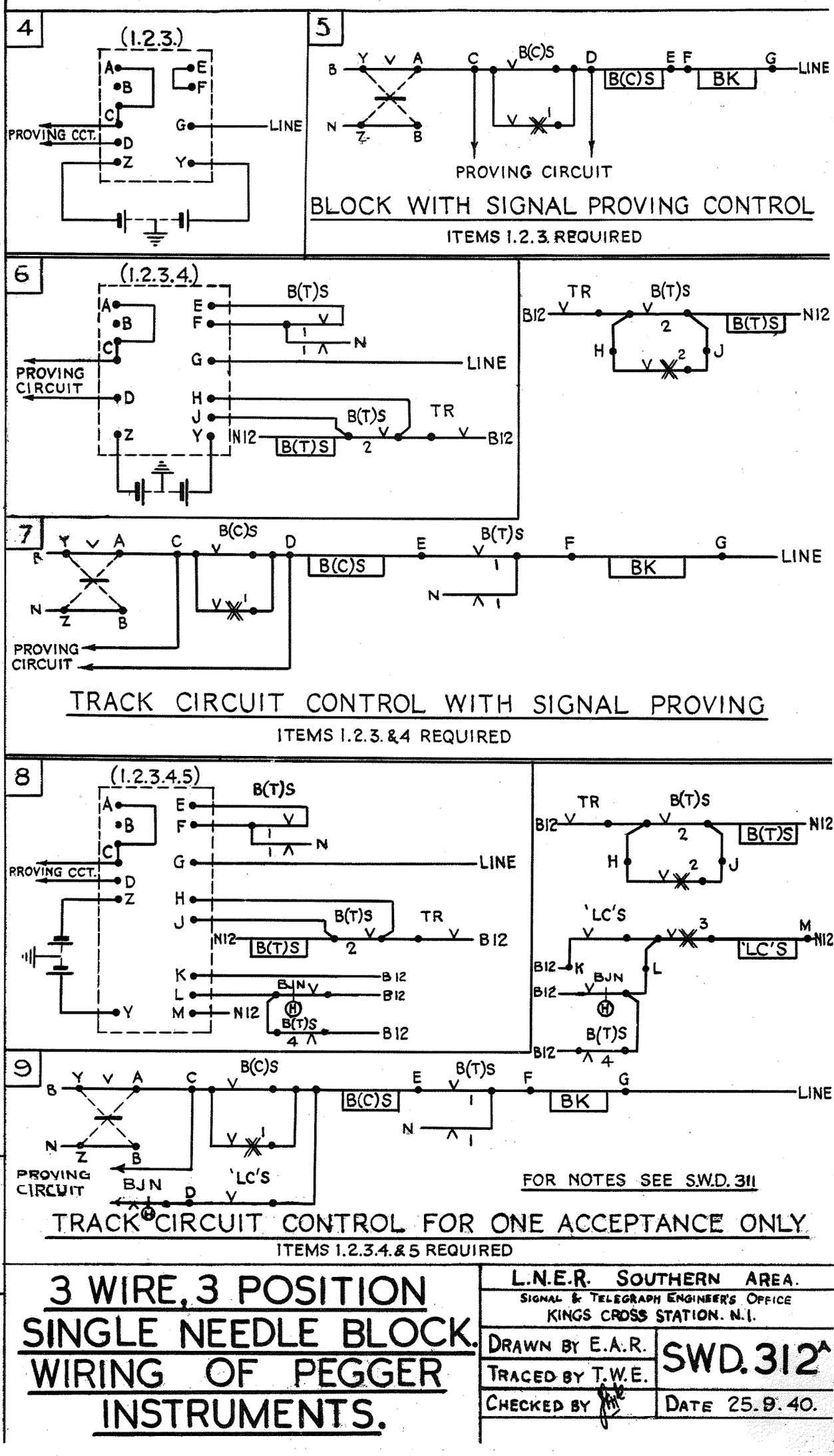

21-9-50	A	12-5-52	JAS
	BJN ADDED IN PART 9.		
FORMERLY SWD 12			

3 WIRE, 3 POSITION SINGLE NEEDLE BLOCK. WIRING OF PEGGER INSTRUMENTS.

L.N.E.R. SOUTHERN AREA.
SIGNAL & TELEGRAPH ENGINEER'S OFFICE
KINGS CROSS STATION. N.1.

DRAWN BY E.A.R.	SWD. 312A
TRACED BY T.W.E.	
CHECKED BY	DATE 25.9.40.

STANDARD WIRING DIAGRAM

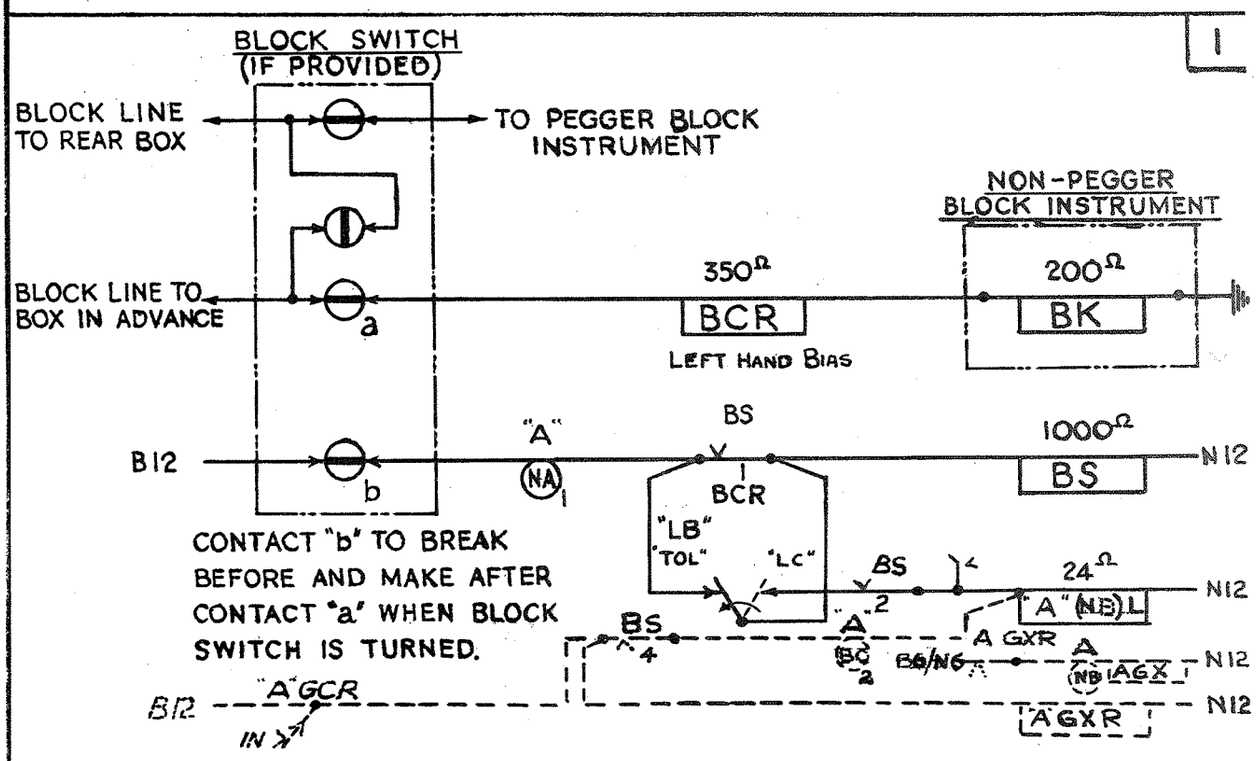

CONTACT "b" TO BREAK BEFORE AND MAKE AFTER CONTACT "a" WHEN BLOCK SWITCH IS TURNED.

NOTE:- WIRING SHEWN DOTTED IN ITEMS 1. & 2. TO BE PROVIDED WHERE A DISC LEADS UP TO A STARTING SIGNAL WHICH IS TO BE PROVED AT DANGER.

WHERE NO LOCK EXISTS ON THE SIGNAL TO THE REAR AND THE NORMAL PROVING IS EFFECTED MECHANICALLY THE LOCK TO BE PROVIDED ON THE STARTING SIGNAL MUST BE OF THE FORCED DROP TYPE.

THREE WIRE, THREE INDICATION BLOCK.

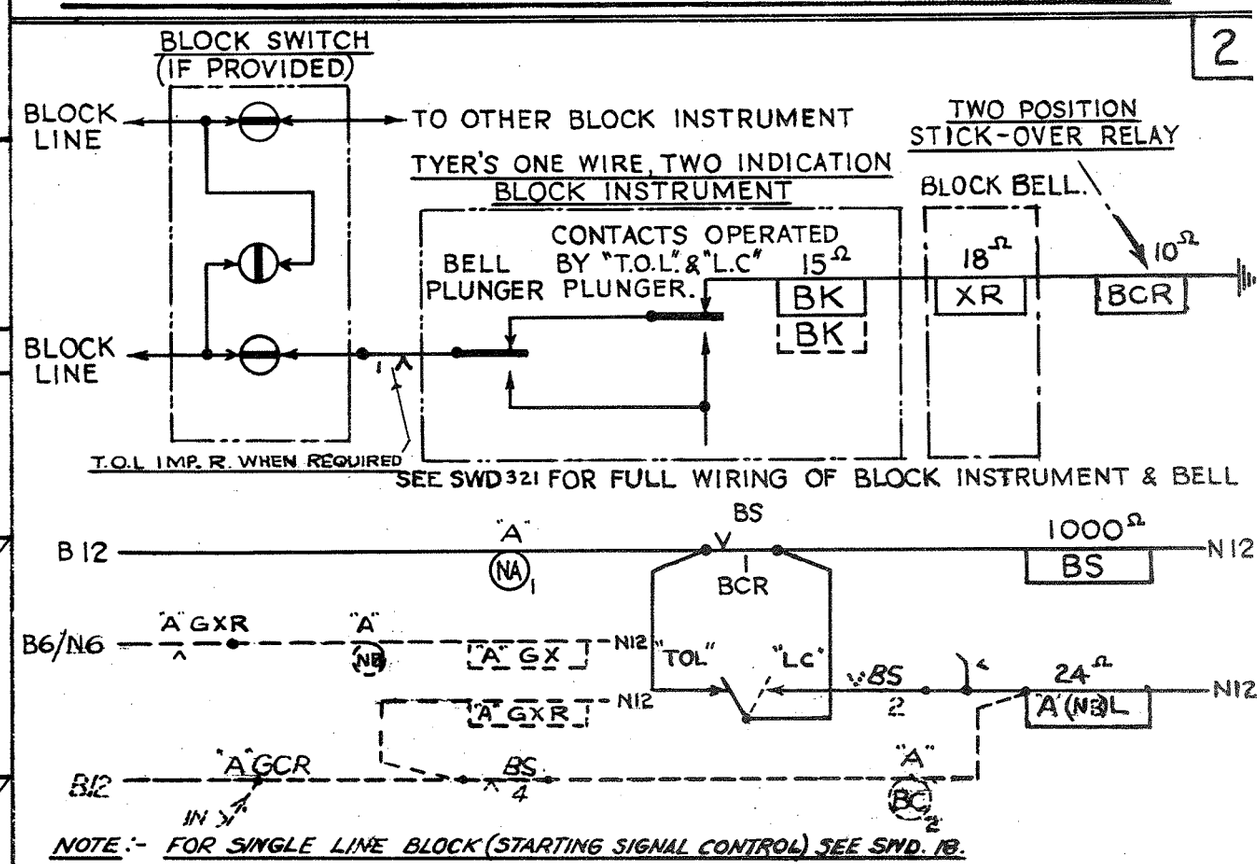

NOTE:- FOR SINGLE LINE BLOCK (STARTING SIGNAL CONTROL) SEE SWD. 18.

TYER'S ONE WIRE, TWO INDICATION BLOCK

B	20-1-44	J.O.G.	BLOCK SWITCH CONTACT DELETED IN B12 FEED TO X(N)A, SEE ITEM 2.		
C	24-6-44	J.O.G.	REFERENCE TO SINGLE LINE WORKING ALTERED. SEE ITEM 2.		
D	6-1-50	R.S.F.	BACKLOCK CIRCUIT & REFERENCE TO FORCED DROP LOCK ADDED. ITEMS 1. & 2.	FORMERLY S.W.D. 13.	21-9-50
A	4-4-51		CONTACT BS 2B ALTERED TO BS 2F IN X(N)L CIRCUIT SEE ITEM 2		
B	12-5-52	J.A.S.	GX CIRCUITS ADDED		

CONTROL OF STARTING SIGNAL BY BLOCK INST. PEGGED TO "LINE CLEAR." RELEASE EFFECTIVE FOR ONE MOVEMENT ONLY.

L.N.E.R. SOUTHERN AREA.
SIGNAL & TELEGRAPH ENGINEER'S OFFICE
KINGS CROSS STATION. N.1.

DRAWN BY J.R. McL.	SWD. 313B
TRACED BY T.W.E.	
CHECKED BY	DATE 4.12.40.

STANDARD WIRING DIAGRAM.

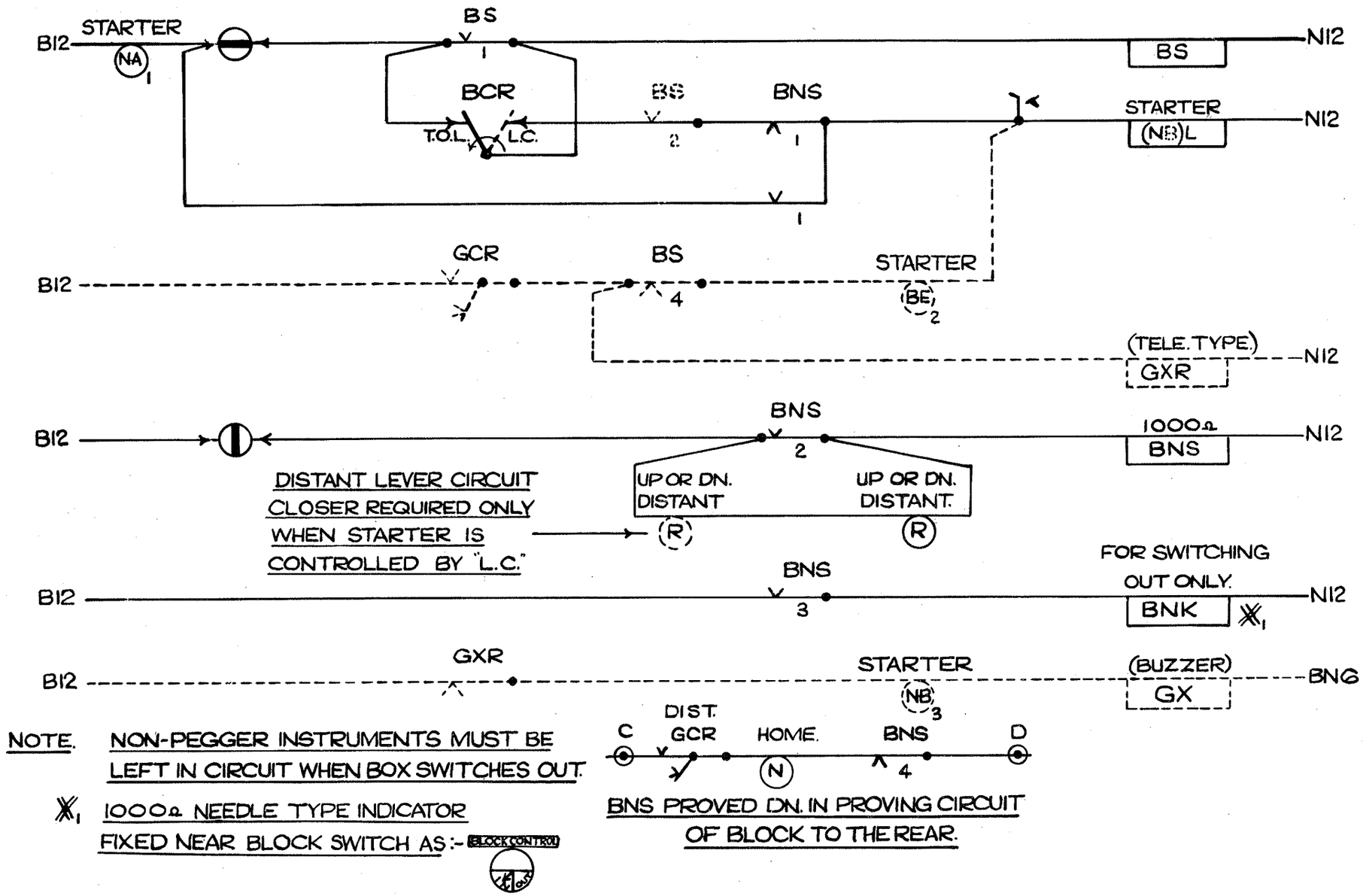

L.C. RELEASE CIRCUIT WHEN BOX IS SWITCHED OUT & STARTING SIGNALS REPLACED FOR OPERATION OF LEVEL CROSSING GATES. (ARRANGEMENT WHEN LOCK ON BLOCK SWITCH DOES NOT EXIST.)

R.E. ~ E.R.

SIGNAL & TELECOMMUNICATIONS ENGR.
KINGS CROSS STATION, LONDON, N.1.

DRAWN BY V.C.

TRACED BY R.S.T.

CHECKED BY N.M.

SWD 314.

DATE. 24·4·53

STANDARD WIRING DIAGRAM.

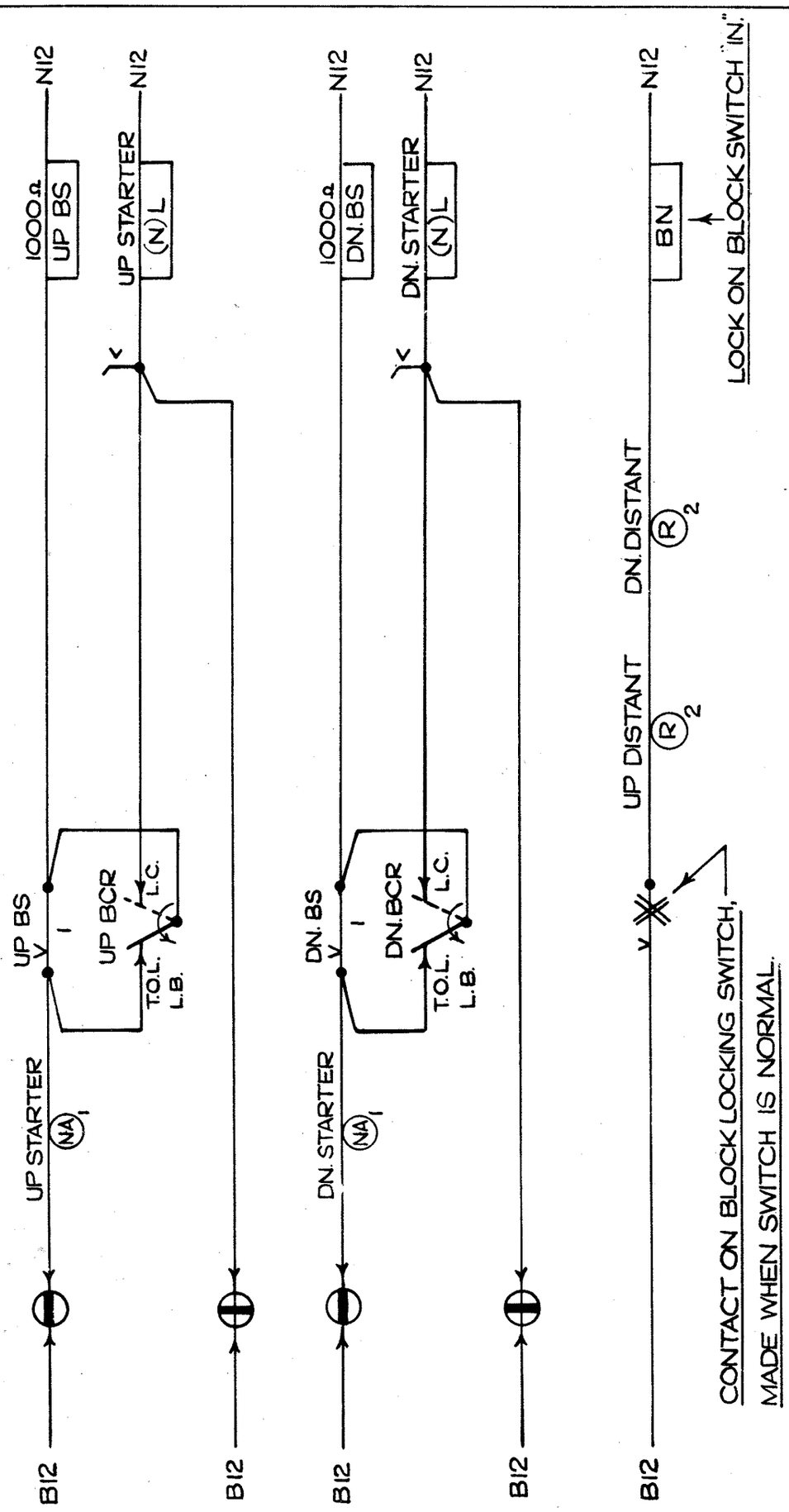

L.C. RELEASE CIRCUIT WHEN BOX IS SWITCHED OUT & STARTING SIGNALS REPLACED FOR OPERATION OF LEVEL CROSSING GATES. (ARRANGEMENT WHEN LOCK ON BLOCK SWITCH EXISTS.)

R.E.~E.R.	
SIGNAL & TELECOMMUNICATIONS ENGS. KINGS CROSS STATION, LONDON, N.1.	
DRAWN BY	SWD. 315.
TRACED BY R.S.T.	
CHECKED BY N.M.	DATE. 27·4·53

STANDARD WIRING DIAGRAM

1.

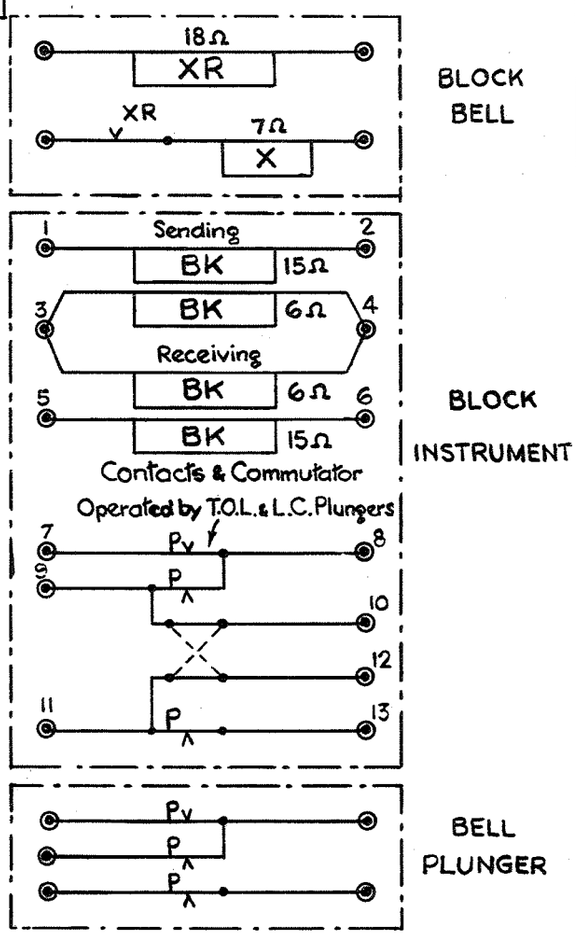

GENERAL ARRANGEMENT

2.

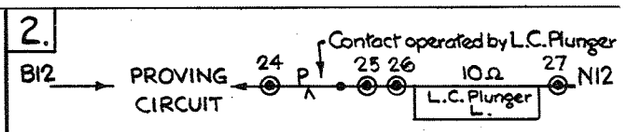

LOCK ON LINE CLEAR PLUNGER

Fitted for Signal Proving where Track Control is not provided, but always required where Trolley Token working exists.

3.

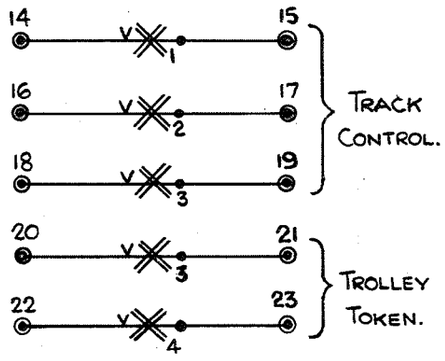

✗1 Contact made when commutator at Line Clear. Broken before ✗2 when plunging Train on Line.

✗2 Contact broken when T.O.L. Plunger Depressed.

✗3 Contact made when commutator at Train on Line.

✗4 Contact made when Train Passed Flap turned to right.

SPECIAL CONTACTS FITTED IN BLOCK INSTRUMENT.

4

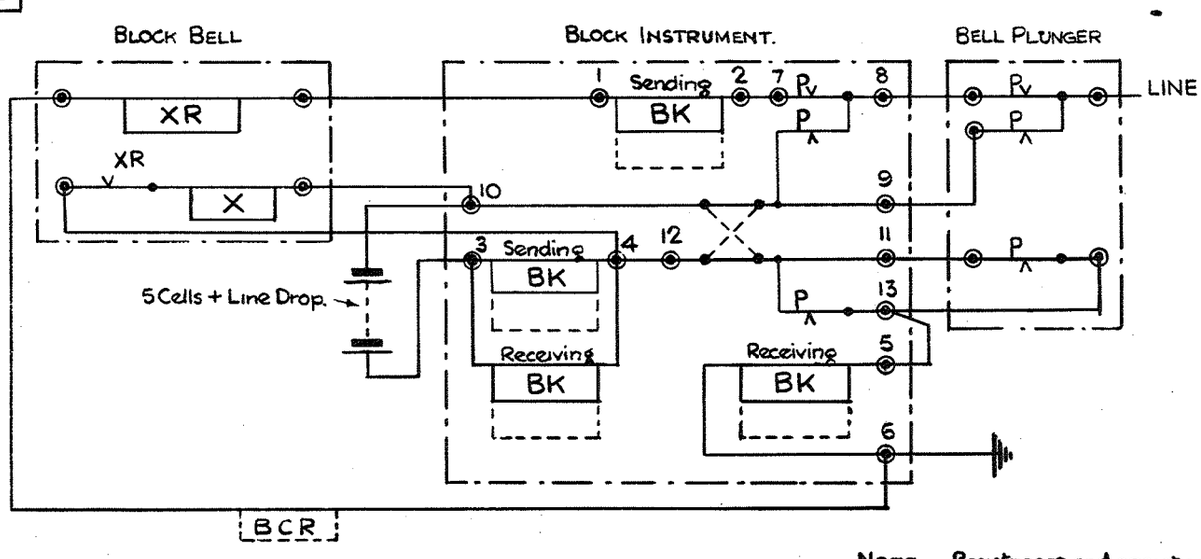

Minimum Operating Currents — Block Bell ..... 0·4 Amp.
Bell Relay & Indicators... 0·04 Amp.

NOTE — Resistances and operating currents vary with different instruments and the values stated are typical only.

STANDARD BLOCK — NO CONTROLS.

TYER'S ONE WIRE TWO POSITION BLOCK INSTRUMENT.

L.N.E.R. SOUTHERN AREA
SIGNAL & TELEGRAPH ENGINEER'S OFFICE
KINGS CROSS STATION N1

DRAWN BY	SWD 321 A
TRACED BY	
CHECKED BY	DATE 11.9.41.

A	12·5·52	J.A.S.	BCR ADDED
	21 9 50		FORMERLY SWD 14
B	18·6·43		NOTE RE- Trolley Token Working added in Item 2

A 8.2.43	B 17.3.43	C 18.6.43	21.9.50	A 12.5.52 J.A.S
Block bell return was connected to terminal 10.	Electrolytic Condenser added.	L.C. PLUNGER LOCK ADDED	FORMERLY S.W.D. 15.	BCR ADDED.

STANDARD WIRING DIAGRAM

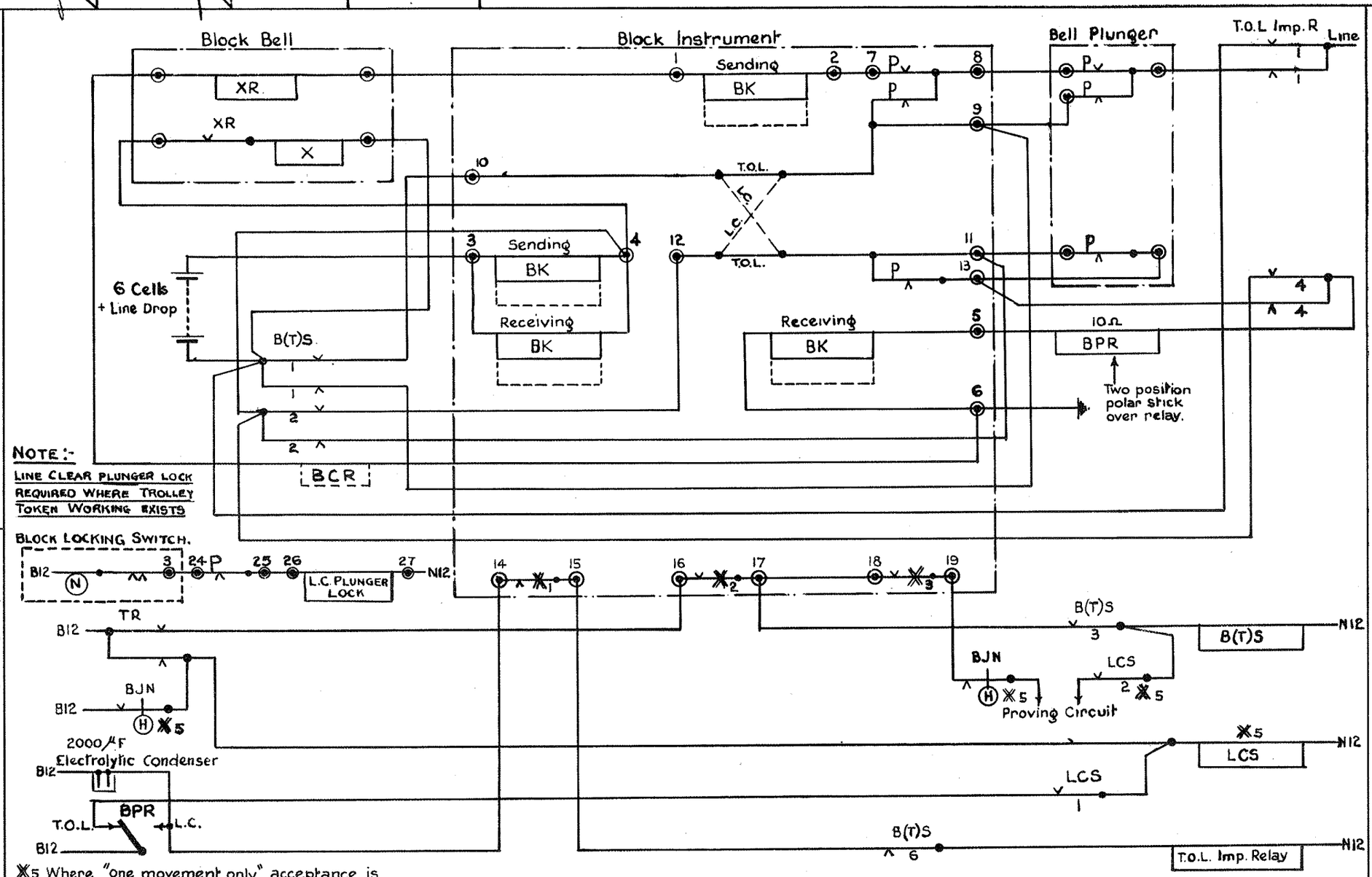

✕5 Where "one movement only" acceptance is not required LCS & BJN are not provided. Other circuits as shown.

TRACK CIRCUIT CONTROL & SIGNAL PROVING (Acceptance effective for one movement only).

TYER'S ONE WIRE TWO POSITION BLOCK INSTRUMENT.

L.N.E.R. SOUTHERN AREA.
SIGNAL & TELEGRAPH ENGINEER'S OFFICE
KINGS CROSS STATION. N.1

DRAWN BY J.R. McL
TRACED BY W.T.
CHECKED BY
DATE 11. 9. 41.

SWD322 A

STANDARD WIRING DIAGRAM

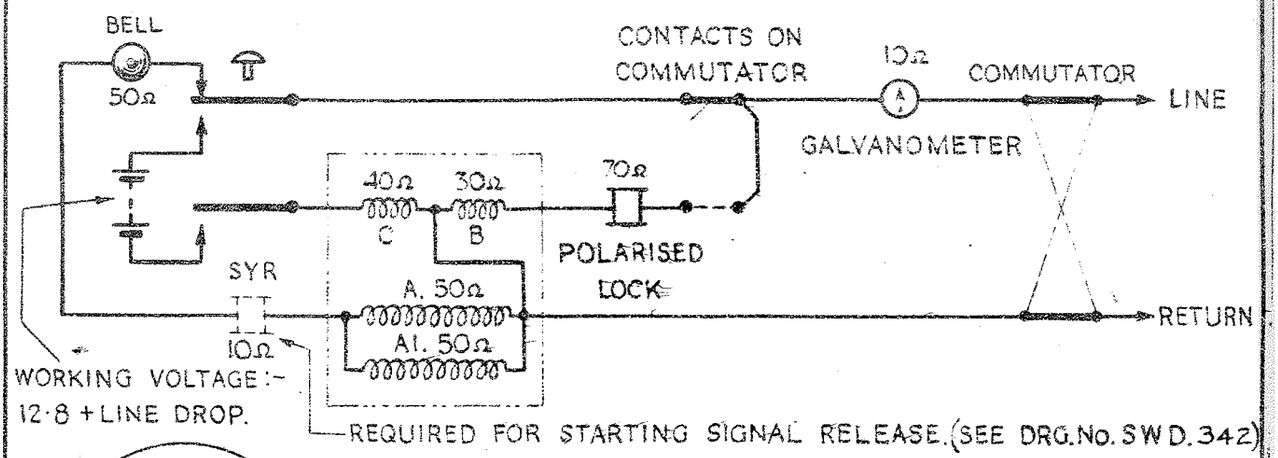

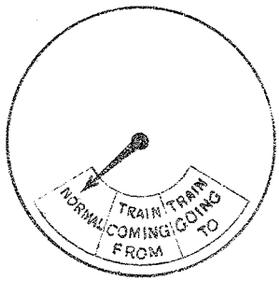

A.& A1. POLARISED OR INDICATING COILS.

B. LIFTS STOP OUT TO ALLOW NEEDLE TO GO RIGHT OVER TO "TRAIN GOING TO" INDICATION.

C. PUTS STOP IN TO PREVENT NEEDLE GOING BEYOND "TRAIN COMING FROM" INDICATION.

METHOD OF OPERATION

OPERATION	A		B	
	INDICATION	COILS ENERGISED	INDICATION	COILS ENERGISED
'B' ASKS "IS LINE CLEAR"?	NORMAL	A, A1. (IN PHASE)	NORMAL	C. (STOP IN)
'A' REPLIES "LINE CLEAR" AND HOLDS IN	NORMAL	C. (STOP IN)	NORMAL	A, A1. (IN PHASE)
'A' HOLDS IN, 'B' TURNS COMM. TO 90°	NORMAL	C (STOP IN)	NORMAL	B. (STOP OUT)
'A' HOLDS IN 'B' TURNS COMM. TO 180°	NORMAL	C. (STOP IN)	TRAIN GOING TO	A.A1. (OUT OF PHASE)
'B' SENDS "ENTERED SECTION"	TRAIN COMING FROM	A.A1 (OUT OF PHASE)	TRAIN GOING TO	C.
'A' ACKNOWLEDGES "ENTERED SECTION"	TRAIN COMING FROM	C.	TRAIN GOING TO	A, A1. (OUT OF PHASE)
TOKEN ARRIVES AT 'A' AND PLACED IN INSTRUMENT. COMM. TURNED TO 180°. 'A' GIVES OUT OF SECTION.	TRAIN COMING FROM	C.	NORMAL	A.A1. (IN PHASE)
'B' ACKNOWLEDGES "OUT OF SECTION"	NORMAL	A.A1. (IN PHASE)	NORMAL	C. (STOP IN)

"METHOD OF OPERATION" SUPERSEDES DRG. No. L.V. 4236

TYER'S KEY TOKEN INSTRUMENT. ORIGINAL FORM.

L.N.E.R. SOUTHERN AREA.
SIGNAL & TELEGRAPH ENGINEER'S OFFICE
KINGS CROSS STATION, N.1.

DRAWN BY T.W.E.	SWD.341
TRACED BY T.W.E.	
CHECKED BY	DATE 1. 8. 40.

21-9-50 | FORMERLY SWD. 3.

STANDARD WIRING DIAGRAM

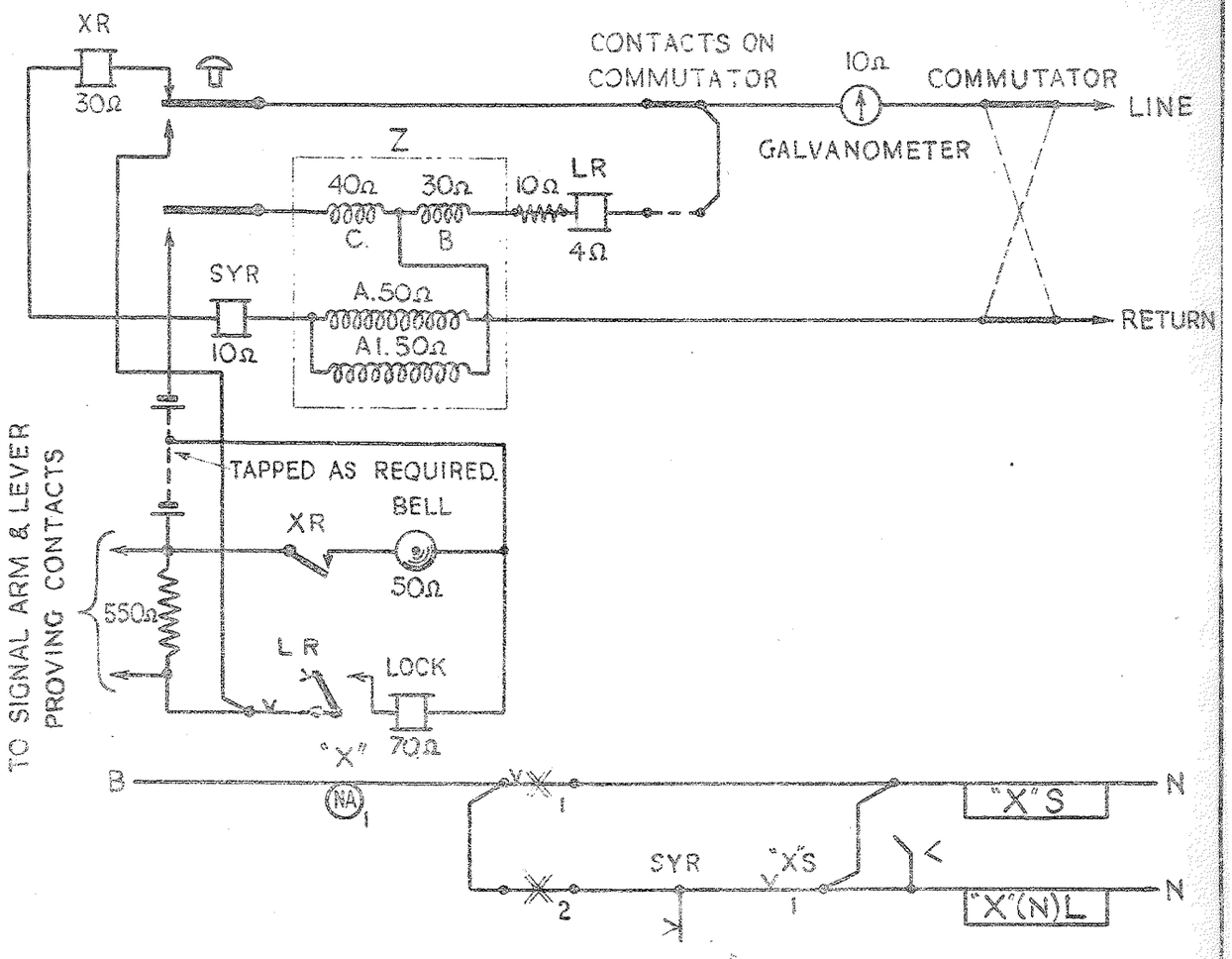

X_1 CONTACT MADE MOMENTARILY WHEN KEY TOKEN WITHDRAWN
X_2 " BROKEN " " " " INSERTED
Z INDICATOR. (FOR DETAILS SEE DRG. NO. SWD. 341)

TYPES OF RELAYS.

XR. TELEPHONE TYPE

LR. NEUTRAL POLAR REWOUND TO 4Ω

SYR. BRASS CASED POLAR REWOUND TO 10Ω

A	5-3-43	J.O.G	21-9-50
DETAILS OF RELAYS ADDED.			FORMERLY S.W.D.A.

TYER'S KEY TOKEN INSTRUMENT.

WITH SIGNAL PROVING & STARTING SIGNAL RELEASE EQUIPMENT.

L.N.E.R. - SOUTHERN AREA.
SIGNAL & TELEGRAPH ENGINEER'S OFFICE
KINGS CROSS STATION. N.1.

DRAWN BY T.W.E.	SWD.342
TRACED BY T.W.E.	
CHECKED BY	DATE 3. 8. 40.

STANDARD. WIRING. DIAGRAM.

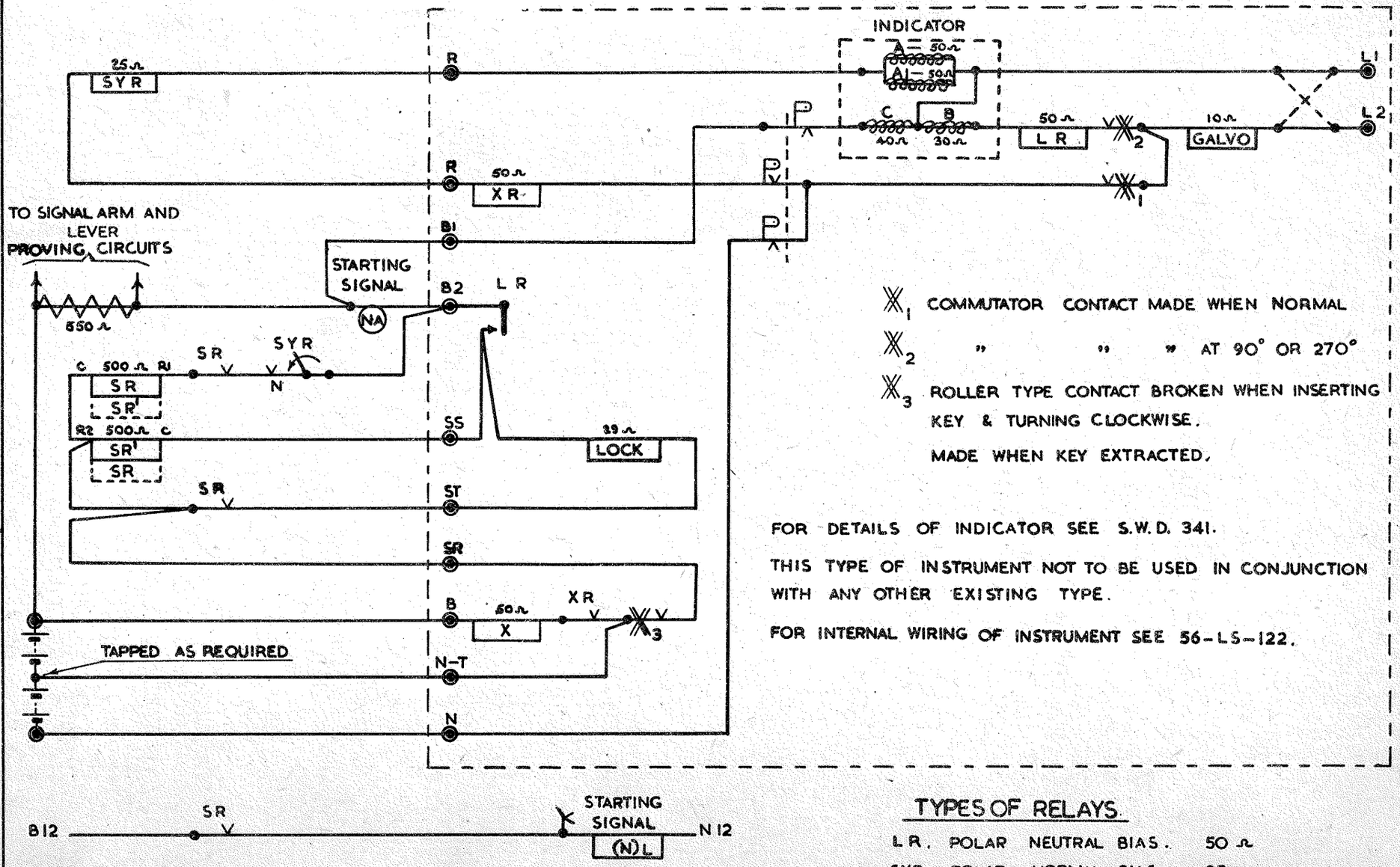

X_1 COMMUTATOR CONTACT MADE WHEN NORMAL

X_2 " " " AT 90° OR 270°

X_3 ROLLER TYPE CONTACT BROKEN WHEN INSERTING KEY & TURNING CLOCKWISE.

MADE WHEN KEY EXTRACTED.

FOR DETAILS OF INDICATOR SEE S.W.D. 341.

THIS TYPE OF INSTRUMENT NOT TO BE USED IN CONJUNCTION WITH ANY OTHER EXISTING TYPE.

FOR INTERNAL WIRING OF INSTRUMENT SEE 56-LS-122.

TYPES OF RELAYS.

LR.	POLAR NEUTRAL BIAS.	50 Ω
SYR.	POLAR NORMAL BIAS.	25 Ω
SR.	LINE RELAY. (SEPARATE COILS)	500Ω + 500Ω

TYERS KEY TOKEN INSTRUMENT TYPE 12A II

WITH SIGNAL PROVING AND STARTING SIGNAL RELEASE.

B.R. ~ ER.
SIGNAL ENGRS: DEPT:
KINGS CROSS STATION.

DRAWN BY. GRB
TRACED BY. GRB
CHECKED BY. NM
DATE. 1.6.56

S.W.D. 343

21-9-50		
FORMERLY S.W.D. 2.		
A	17-1 52	B.O.B

NOTE:- WHEN USED WITH SWD 342 ADDED

TYER'S INTERMEDIATE KEY TOKEN INSTRUMENT.

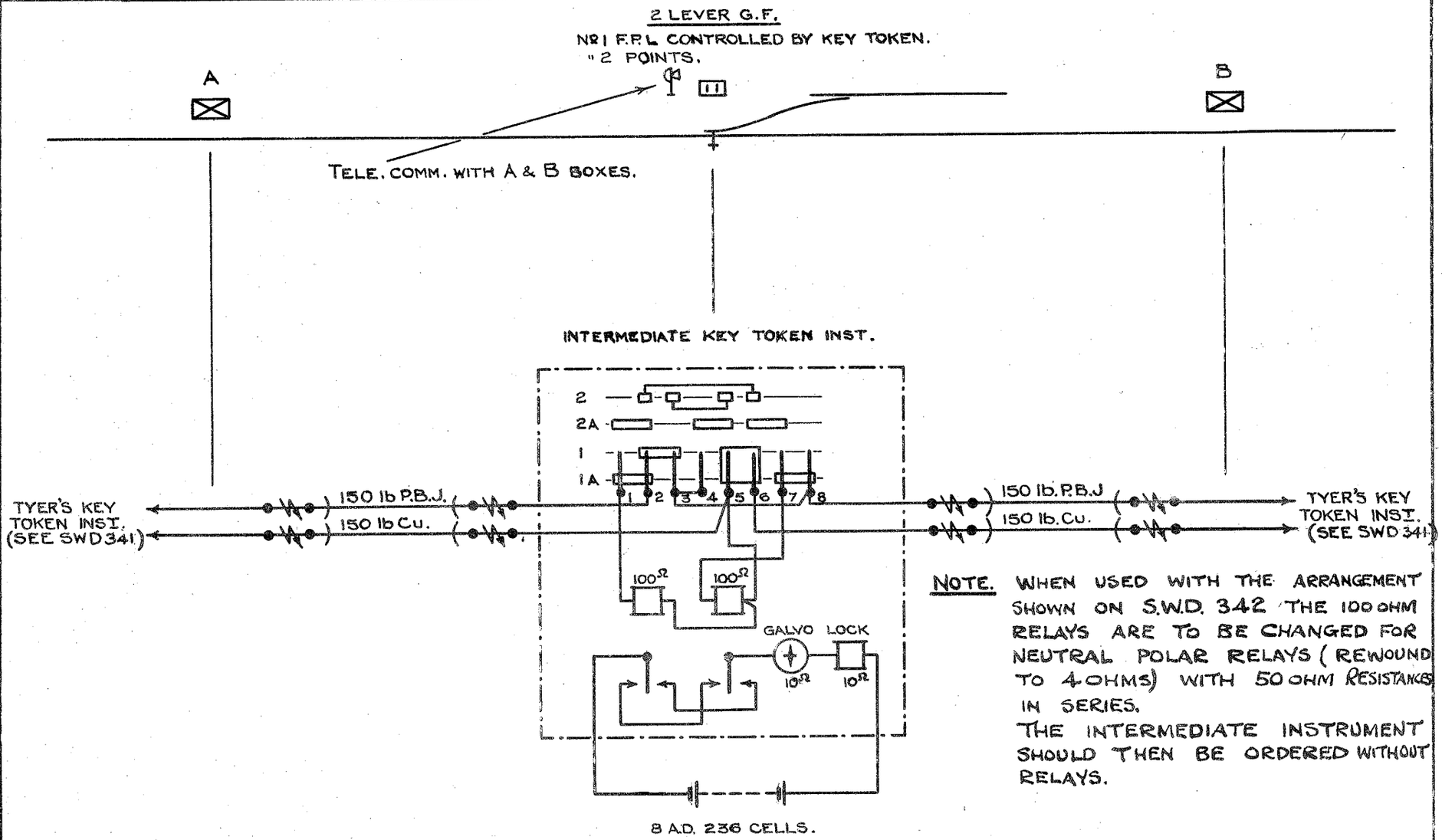

NOTE. WHEN USED WITH THE ARRANGEMENT SHOWN ON S.W.D. 342 THE 100 OHM RELAYS ARE TO BE CHANGED FOR NEUTRAL POLAR RELAYS (REWOUND TO 4 OHMS) WITH 50 OHM RESISTANCES IN SERIES.
THE INTERMEDIATE INSTRUMENT SHOULD THEN BE ORDERED WITHOUT RELAYS.

TO OBTAIN KEY SHUNTER TELEPHONES A & B SIGNAL BOXES & TURNS KEY THRO' 90°. SIGNALMEN AT A & B PLUNGE SIMULTANEOUSLY ON MAIN TOKEN INSTS, & IF THESE ARE IN PHASE THE GALVO. OF THE INTER. TOKEN INST. WILL SHOW 'FREE' & THE LOCK BE RELEASED TO ENABLE THE SHUNTER TO TURN THE KEY THRO' A FURTHER 90° & WITHDRAW IT.

L.N.E.R. SOUTHERN AREA.
SIGNAL & TELEGRAPH ENGINEER'S OFFICE
KINGS CROSS STATION, N.1.

DRAWN BY F.M.F
TRACED BY F.M.F
CHECKED BY
DATE 2.6.47.

SWD. 345A

STANDARD WIRING DIAGRAM

1026

ORIGINALLY DRAWING
Nº 44CES/A829/1A.

STANDARD WIRING DIAGRAM

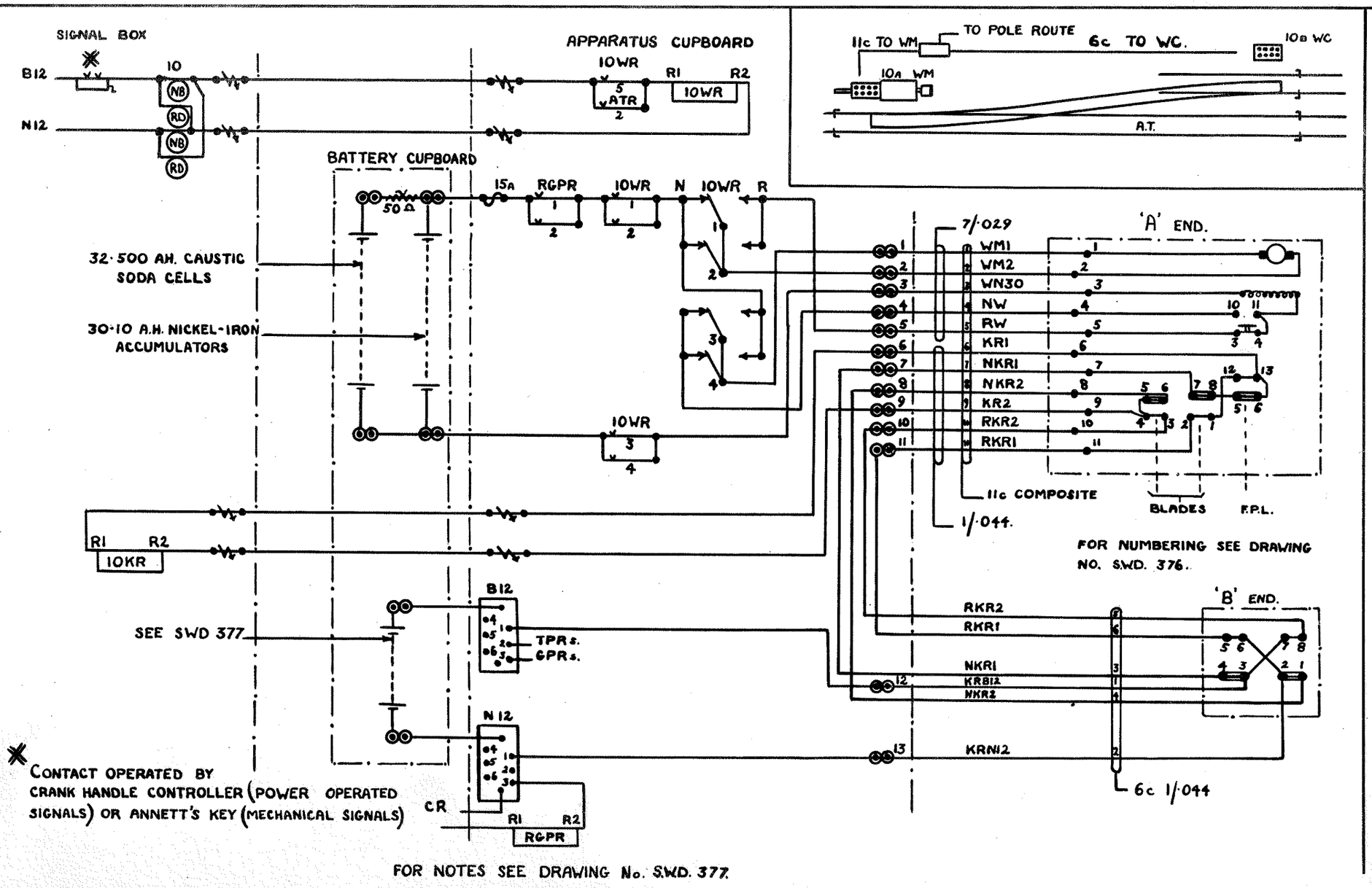

LOW VOLTAGE POINT MACHINE
DOUBLE END DETECTION
LEFT HAND SWITCH CLOSED
MACHINE TYPE S.G.E. HB741.

RAILWAY EXECUTIVE - EASTERN REGION.
SIGNAL & TELECOMMUNICATIONS ENGR. OFFICE.
KINGS CROSS STATION N1.

DRAWN BY V.C.
TRACED BY Y.R.
CHECKED BY N.M.

SWD 371

DATE 18. 2. 53.

ORIGINALLY DRAWING
Nº 44CES/AB29/2

STANDARD WIRING DIAGRAM

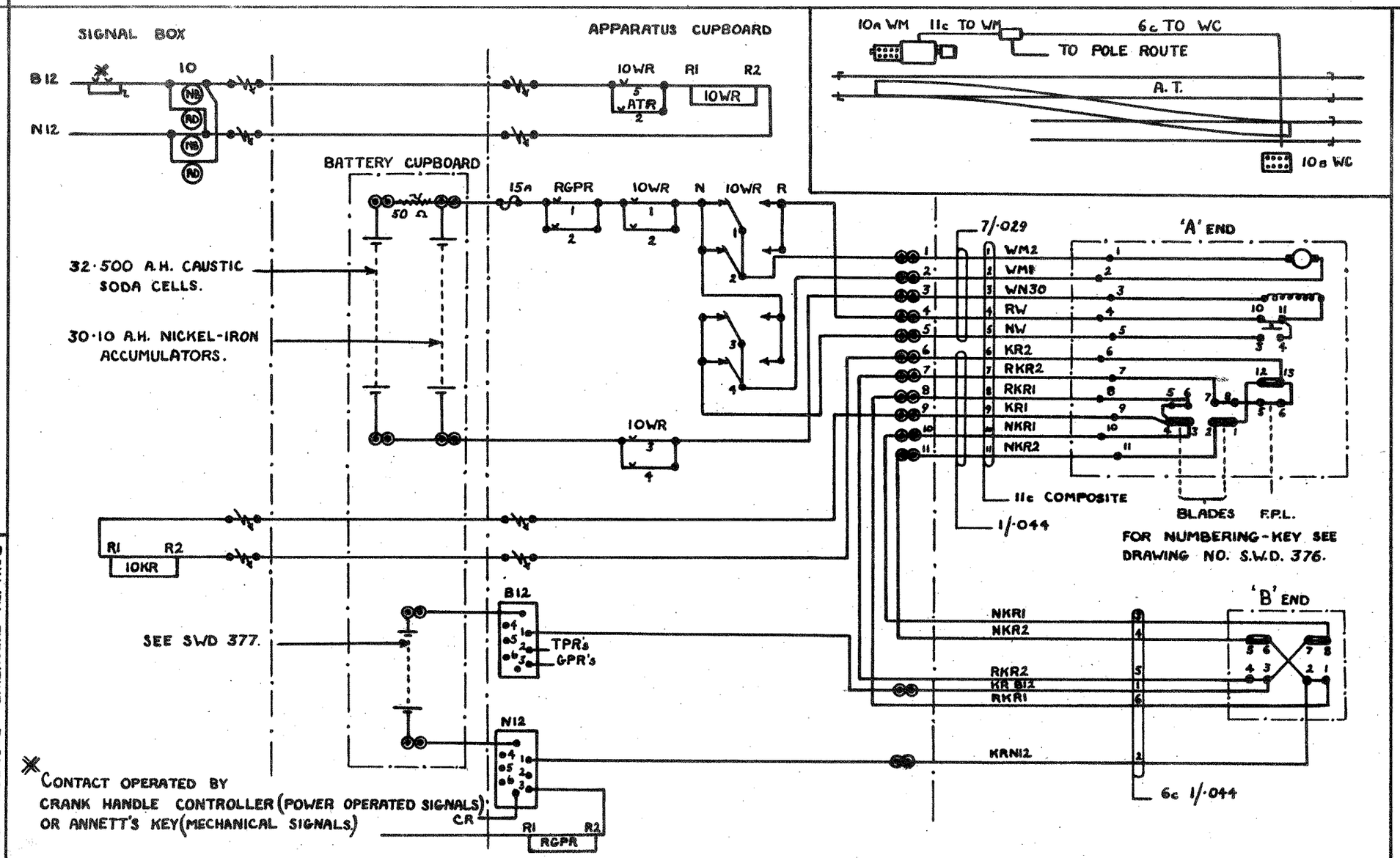

FOR NOTES SEE DRAWING No. SWD. 377.

LOW VOLTAGE POINT MACHINE
DOUBLE END DETECTION
RIGHT HAND SWITCH CLOSED
MACHINE TYPE S.G.E. HB741.

RAILWAY EXECUTIVE - EASTERN REGION.
SIGNAL & TELECOMMUNICATIONS ENGR. OFFICE.
KINGS CROSS STATION N1.

DRAWN BY V.C.
TRACED BY Y.R.
CHECKED BY N.M.
DATE 18.2.53.

SWD 372

ORIGINALLY DRAWING
Nº 44CES/A829/3.

STANDARD WIRING DIAGRAM

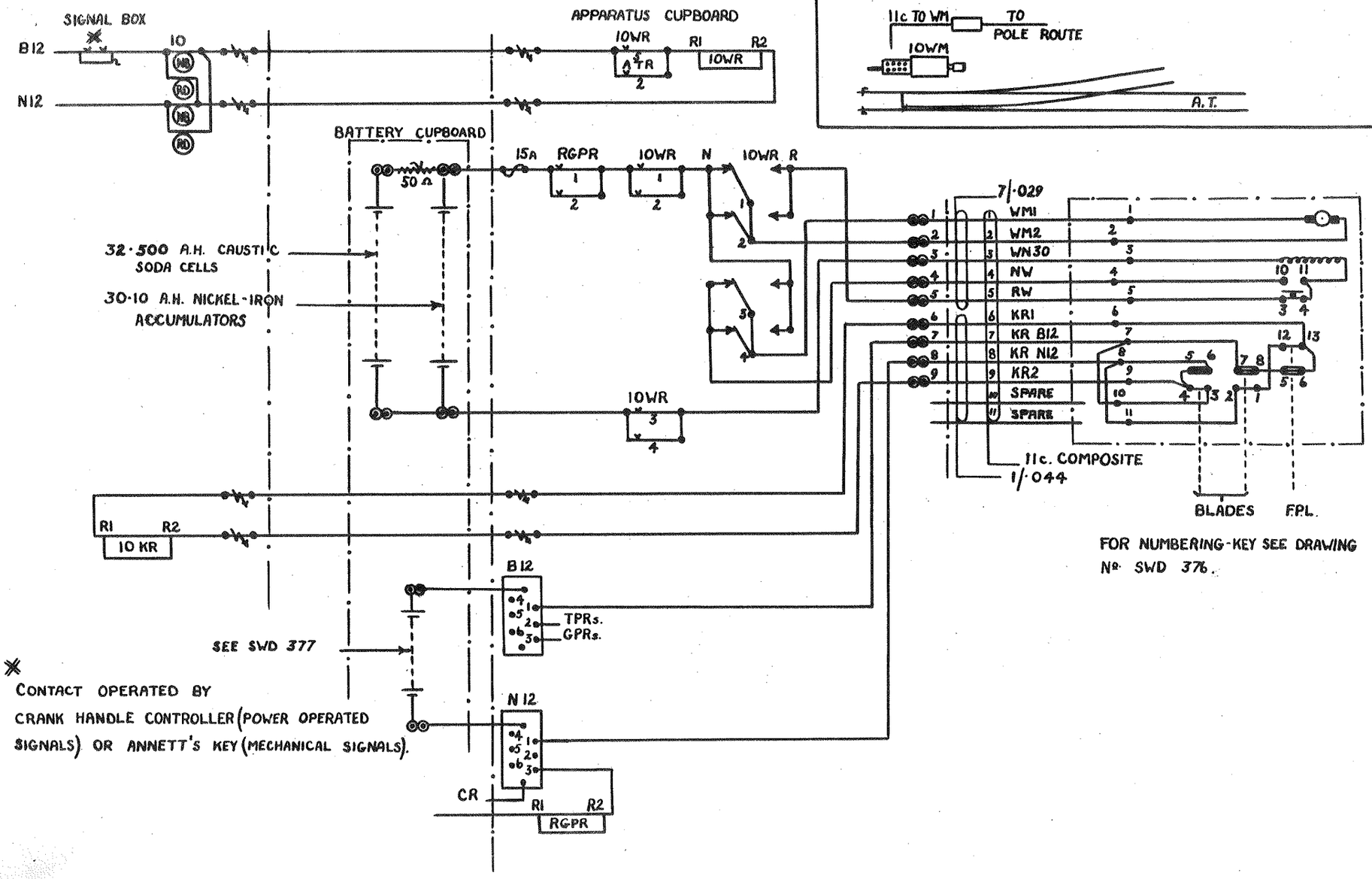

✱ CONTACT OPERATED BY CRANK HANDLE CONTROLLER (POWER OPERATED SIGNALS) OR ANNETT'S KEY (MECHANICAL SIGNALS).

FOR NOTES SEE DRAWING No. SWD. 377.

LOW VOLTAGE POINT MACHINE
SINGLE END DETECTION
LEFT HAND SWITCH CLOSED
MACHINE TYPE S.G.E. HB 741.

RAILWAY EXECUTIVE - EASTERN REGION
SIGNAL & TELECOMMUNICATIONS ENGRS OFFICE.
KINGS CROSS STATION N1.

DRAWN BY V.C.
TRACED BY Y.R.
CHECKED BY. N.M.
DATE 16.2.53.

SWD 373

ORIGINALLY DRAWING
Nº 44CES/A829/4.

STANDARD WIRING DIAGRAM

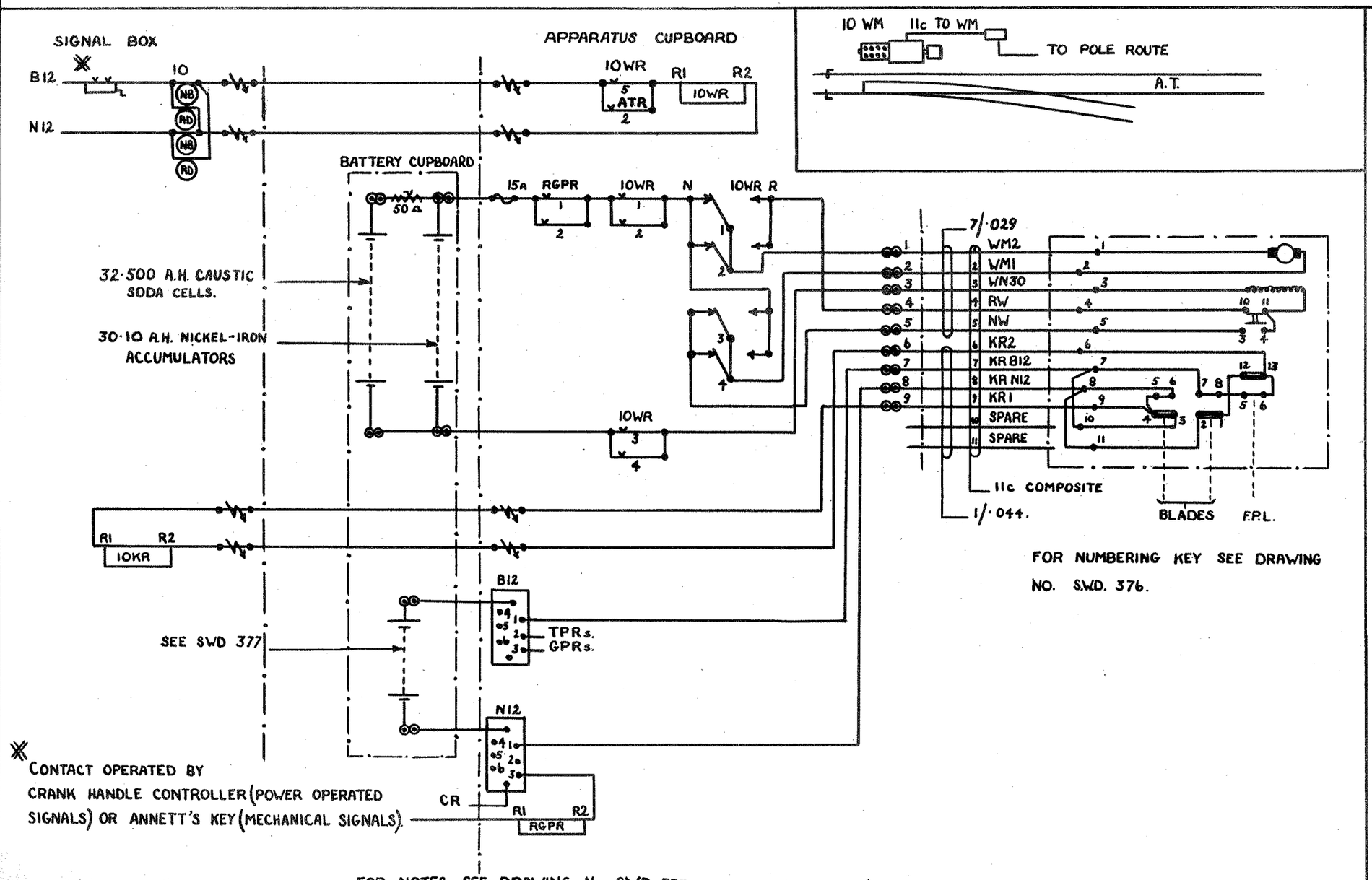

LOW VOLTAGE POINT MACHINE
SINGLE END DETECTION
RIGHT HAND SWITCH CLOSED
MACHINE TYPE S.G.E. HB 741.

RAILWAY EXECUTIVE - EASTERN REGION
SIGNAL & TELECOMMUNICATIONS ENGR. OFFICE.
KINGS CROSS STATION N1.

DRAWN BY V.C.
TRACED BY Y.R.
CHECKED BY N.M.
DATE 17. 2. 53.

SWD 374

ORIGINALLY DRAWING NO. 44CES/A829/5.

STANDARD WIRING DIAGRAM

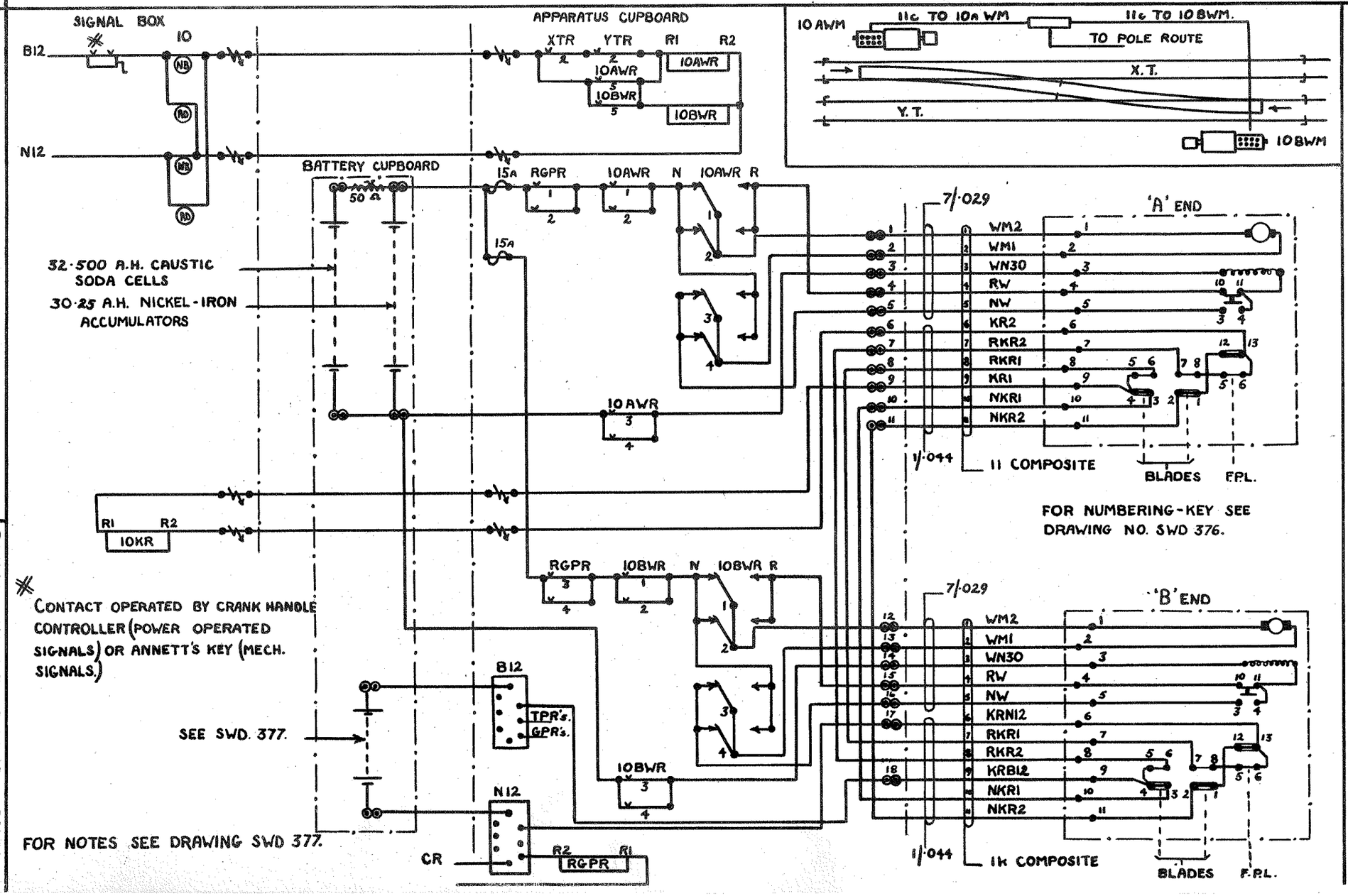

LOW VOLTAGE POINT MACHINE

DOUBLE END DETECTION

FACING CROSSOVER RIGHT HAND

SWITCH CLOSED

MACHINE TYPE SGE HB741

RAILWAY EXECUTIVE - EASTERN REGION.

SIGNAL & TELECOMMUNICATIONS ENGR. OFFICE.

KINGS CROSS STATION N1.

DRAWN BY V.C.

TRACED BY Y.R.

CHECKED BY N.M.

DATE 19. 2. 53.

SWD 375

ORIGINALLY DRAWING NO. 44CES/A829/6.

STANDARD WIRING DIAGRAM

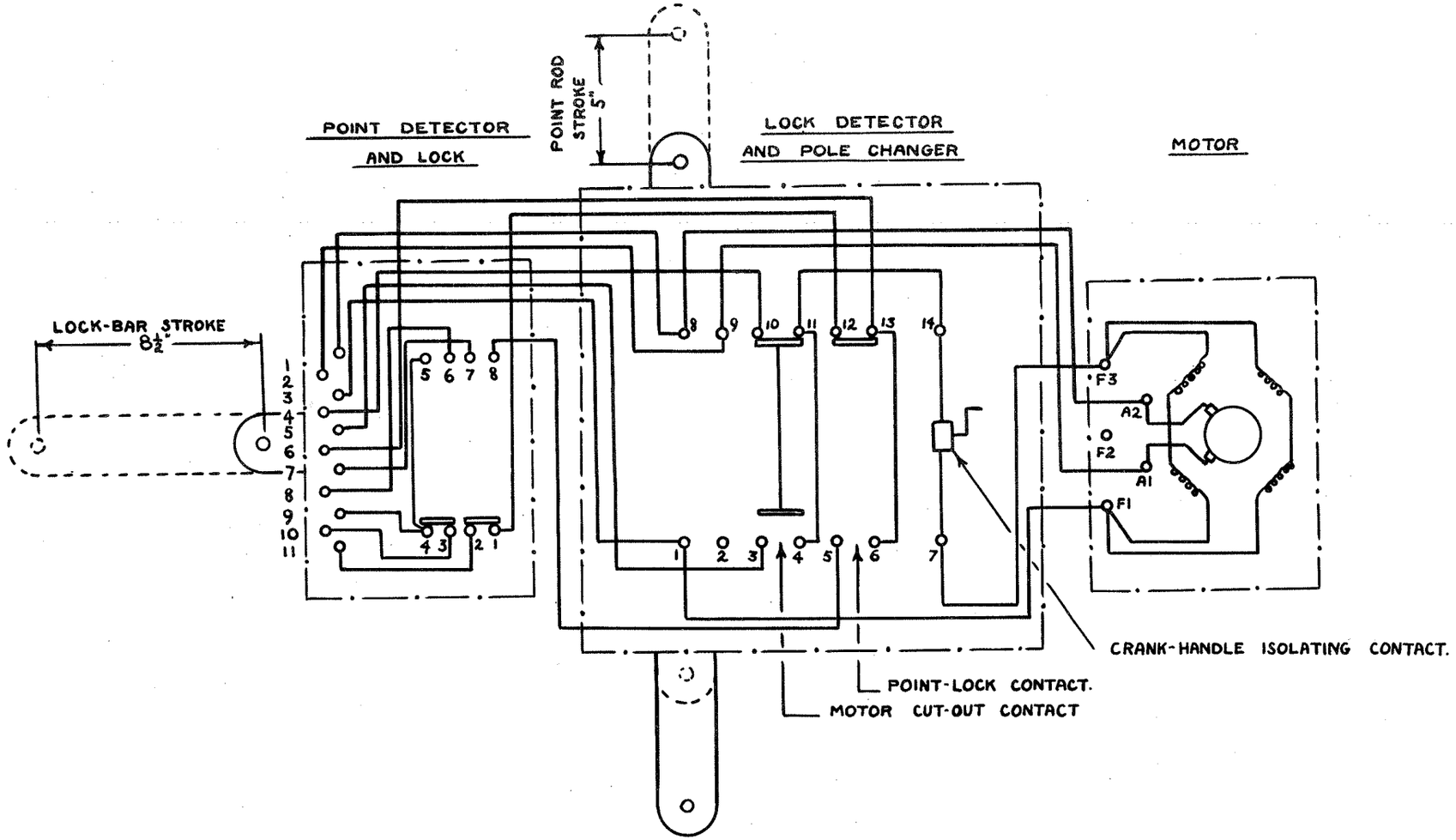

NOTE :- 1. MOTOR CUT-OUT CONTACTS BOTH MAKE IMMEDIATELY ON COMMENCEMENT OF STROKE AND CHANGEOVER AT END OF STROKE.

2. ISOLATING CONTACT TO BE STRAPPED WHERE INDIVIDUAL CRANK-HANDLE IS USED.

TYPICAL OPERATING CHARACTERISTICS

	SINGLE ENDED	DOUBLE ENDED.
VOLTS	30	30
AMPS.	5·2 MAX. 4·5 AV.	5·5 MAX. 4·5 AV.
TIME	4·2 SECS.	5·5 SECS.

LOW VOLTAGE POINT MACHINE

INTERNAL WIRING

MACHINE TYPE SGE HB741

RAILWAY EXECUTIVE - EASTERN REGION.
SIGNAL & TELECOMMUNICATIONS ENGR. OFFICE.
KINGS CROSS STATION N1.

DRAWN BY V.C.
TRACED BY Y.R.
CHECKED BY N.M.
DATE 19. 2. 53.

SWD. 376.

ORIGINALLY DRAWING
Nº. 44CES/A829/7A.

A	5.4.54.	W.B.

NOTE 9 & REFERENCE IN BRACKETS TO NOTE 6 ADDED. N.M.

NOTES:-

1. WHEN POWER SUPPLY AVAILABLE CAUSTIC SODA CELLS TO BE REPLACED BY DUAL RANGE RECTIFIER OUTPUT 0·3 AMP., 50 OHM. LIMITING RESISTANCE AND INDICATION BATTERY TO BE OMITTED (DRG Nº SWD 378)
2. IF APPARATUS CUPBOARD TERMINAL NUMBERS CANNOT BE ARRANGED AS SHEWN, THEN NUMBERS BEGINNING 11 OR 21 ETC. TO BE USED.
3. WHEN POWER OPERATED SIGNALS ARE USED RGPR NOT REQUIRED.
4. IN THE CASE OF DOUBLE FACING CROSSOVER RGPR PROVES BOTH UP & DOWN SIGNALS AT DANGER (DRG. Nº SWD 375).
5. 'A' END DENOTES POINTS NEARER SIGNAL BOX.
6. WHEN MACHINE IS INSTALLED AT 'B' END. (APPLICABLE TO HB741/2 MACHINE ONLY.)

AT FACING END ('B' END)			BETWEEN ENDS			AT TRAILING END. ('A' END)		
KR1	BECOMES	KR B12	RKR1	BECOMES	RKR2	KR B12	BECOMES	KR1.
KR2	"	KR N12	RKR2	"	RKR1	KR N12	"	KR2

7. KR TO BE FED FROM 'B' END IN ALL CASES.
8. INDICATION BATTERY TO BE COMPOSED OF 10-AD. Nº 236 CELLS.
9. IF MACHINE TYPE HB542 OR HB742 IS USED FOR SINGLE ENDED POINTS, SPLIT LOCK SLIDES TO BE RIVETTED TOGETHER.

LOW VOLTAGE POINT MACHINE

NOTE REFERENCES APPLICABLE TO DRAWINGS NOS. SWD. 371-5, 379, 380-2

RAILWAY EXECUTIVE - EASTERN REGION.
SIGNAL & TELECOMMUNICATIONS ENGR. OFFICE.
KINGS CROSS STATION N1.

DRAWN BY V.C.
TRACED BY Y.R.
CHECKED BY N.M.

SWD. 377A

DATE 23. 2. 53.

STANDARD WIRING DIAGRAM

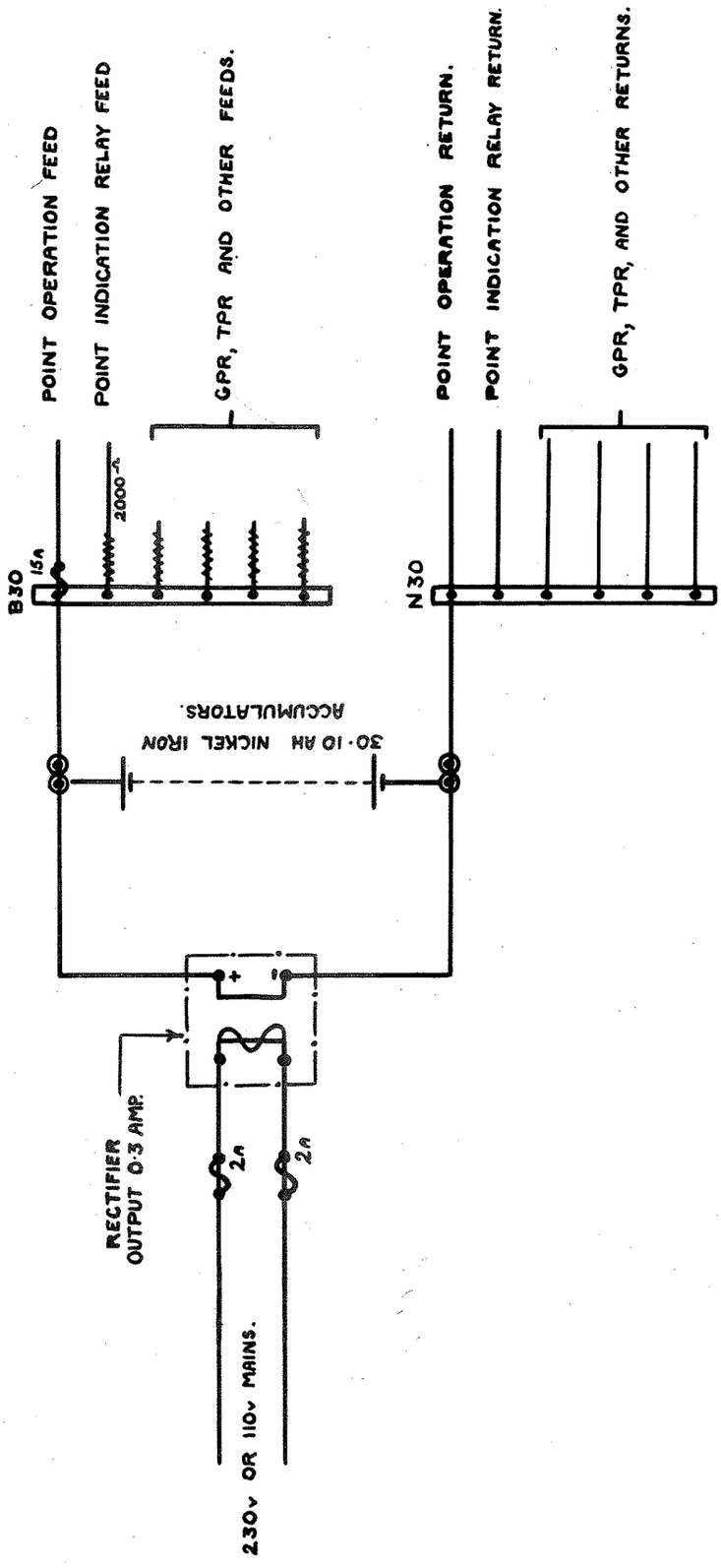

LOW VOLTAGE POINT MACHINE

COMMON BATTERY WHEN

POWER SUPPLY AVAILABLE

RAILWAY EXECUTIVE EASTERN REGION.

SIGNAL & TELECOMMUNICATIONS ENG^R OFFICE.
KINGS CROSS STATION N1.

DRAWN BY V.C.	S.W.D. 378.
TRACED BY Y.R.	
CHECKED BY N.M.	DATE 23. 2. 53.

ORIGINALLY DRAWING
No. 44CES/A829/8.

STANDARD WIRING DIAGRAM.

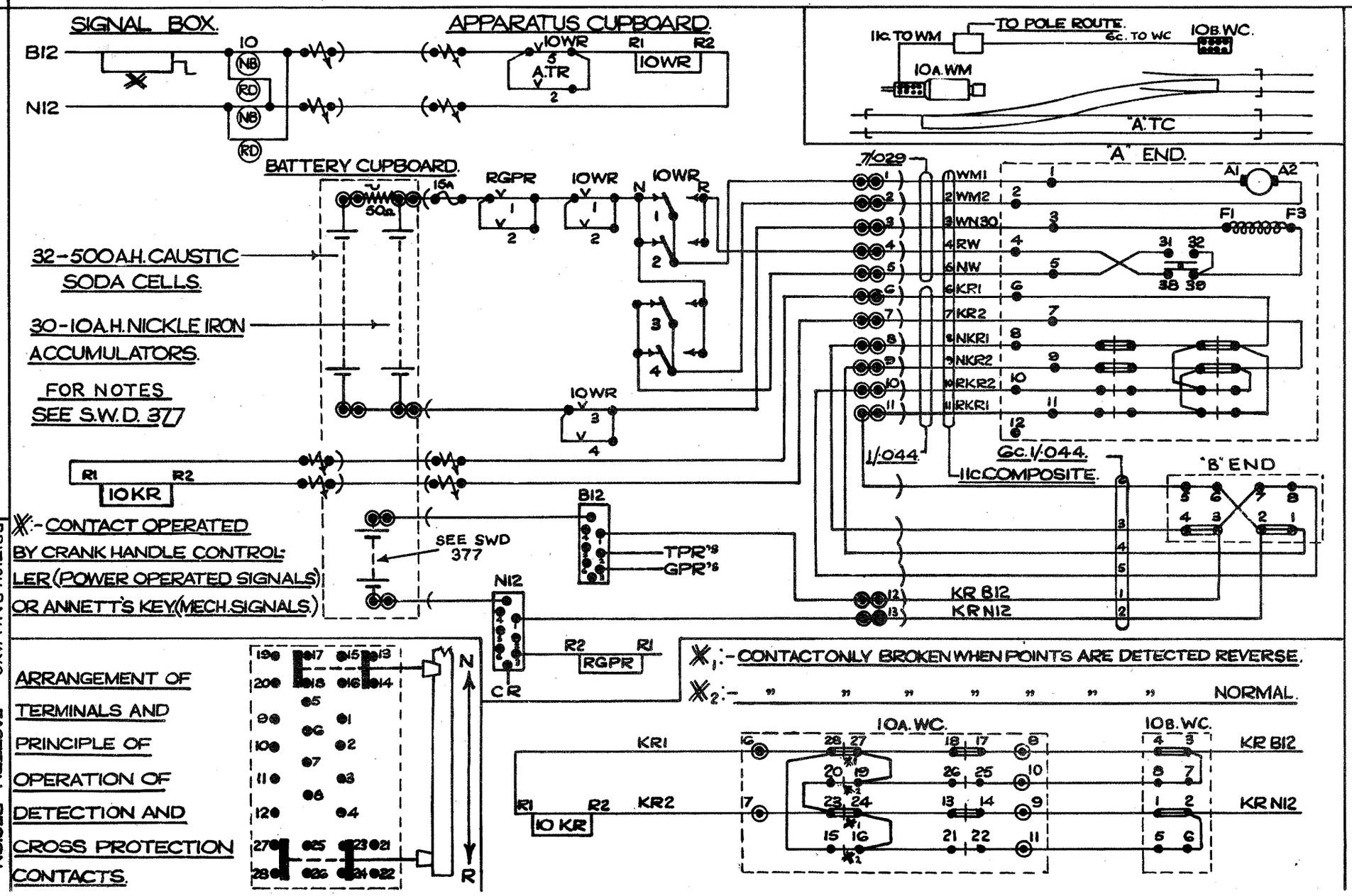

LOW VOLTAGE POINT MACHINE
DOUBLE END DETECTION
LEFT HAND SWITCH CLOSED
MACHINE TYPE S.G.E. HB 541/2.

BRITISH RAILWAYS — EASTERN REGION
SIGNAL & TELECOMMUNICATIONS ENG'R OFFICE.
KINGS CROSS STATION, LONDON, N.1.

DRAWN BY R.R.
TRACED BY R.S.T.
CHECKED BY N.M.
DATE 31.3.54.

SWD 379.

STANDARD WIRING DIAGRAM.

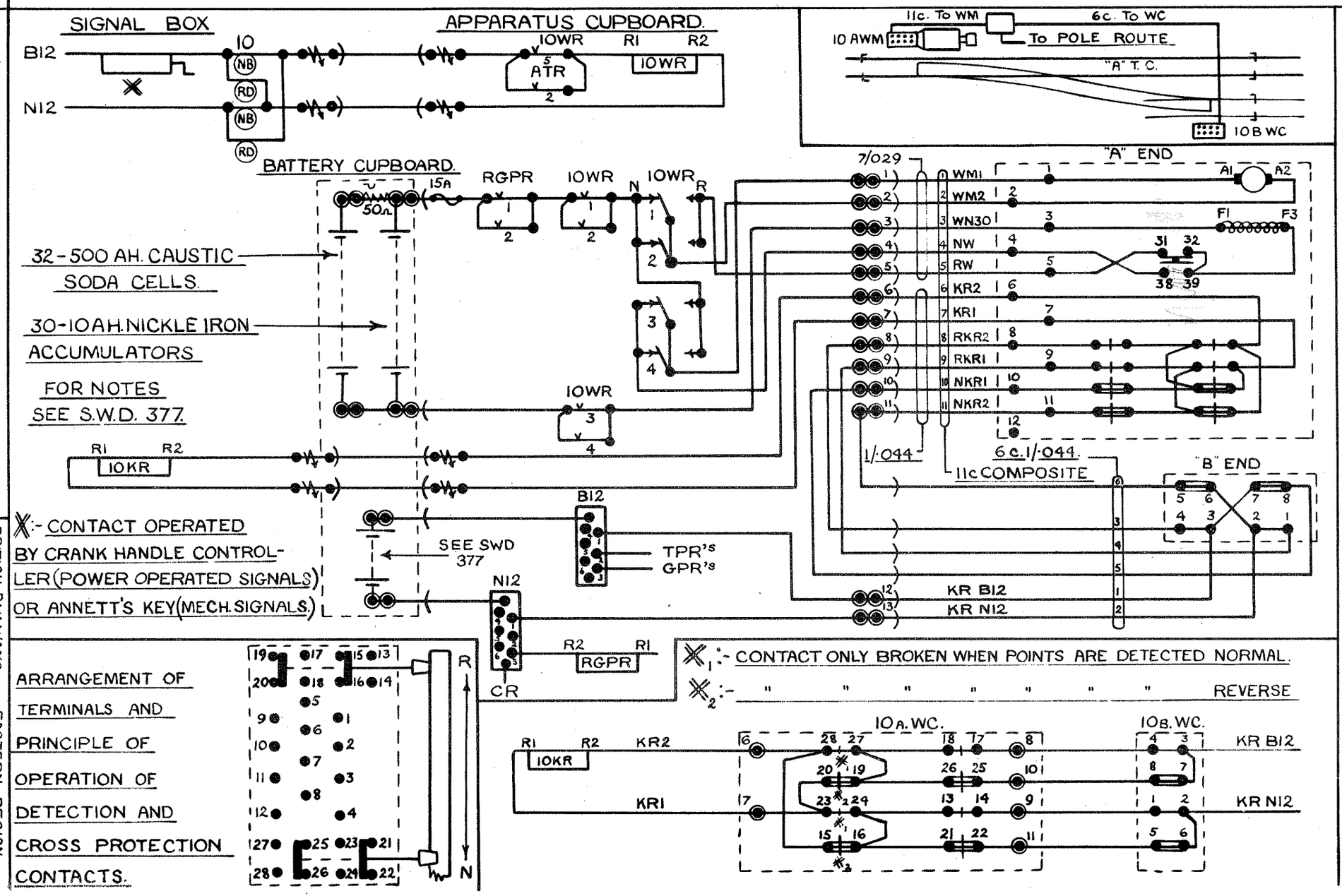

LOW VOLTAGE POINT MACHINE

DOUBLE END DETECTION

RIGHT HAND SWITCH CLOSED

MACHINE TYPE S.G.E. HB 541/2.

BRITISH RAILWAYS — EASTERN REGION

SIGNAL & TELECOMMUNICATIONS ENGR. OFFICE
KINGS CROSS STATION, LONDON, N.1.

DRAWN BY R.R.

TRACED BY Y.R.

CHECKED BY N.M.

DATE 31.3.54.

SWD 380.

STANDARD WIRING DIAGRAM

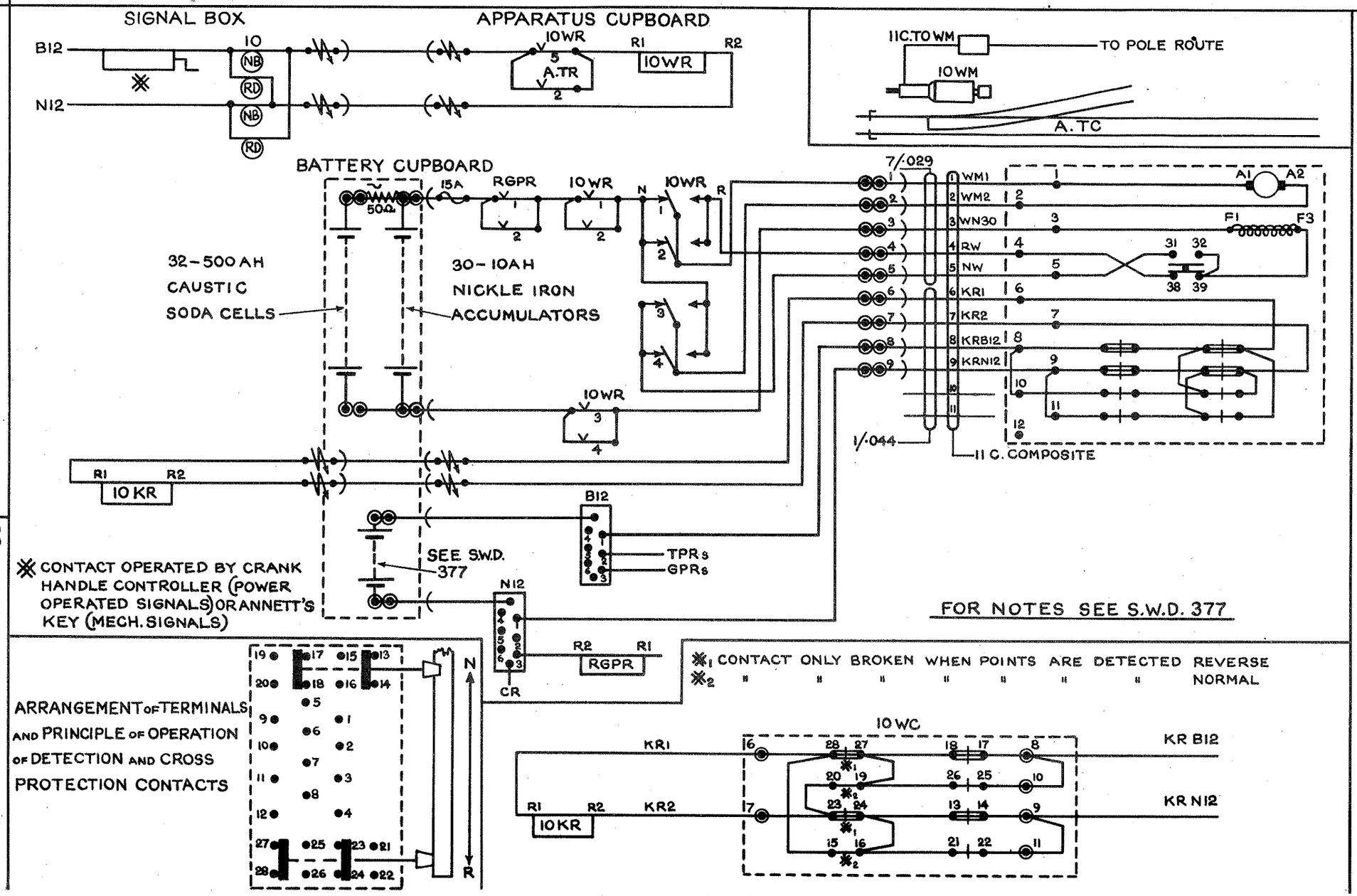

LOW VOLTAGE POINT MACHINE

SINGLE END DETECTION

LEFT HAND SWITCH CLOSED

MACHINE TYPE S.G.E. HB 541/2.

BRITISH RAILWAYS — EASTERN REGION
SIGNAL & TELECOMMUNICATIONS ENGR
KING'S CROSS STATION, N.1.

DRAWN BY W.B.
TRACED BY W.B.
CHECKED BY N.M.

SWD 381.

DATE 31.3.54.

STANDARD WIRING DIAGRAM

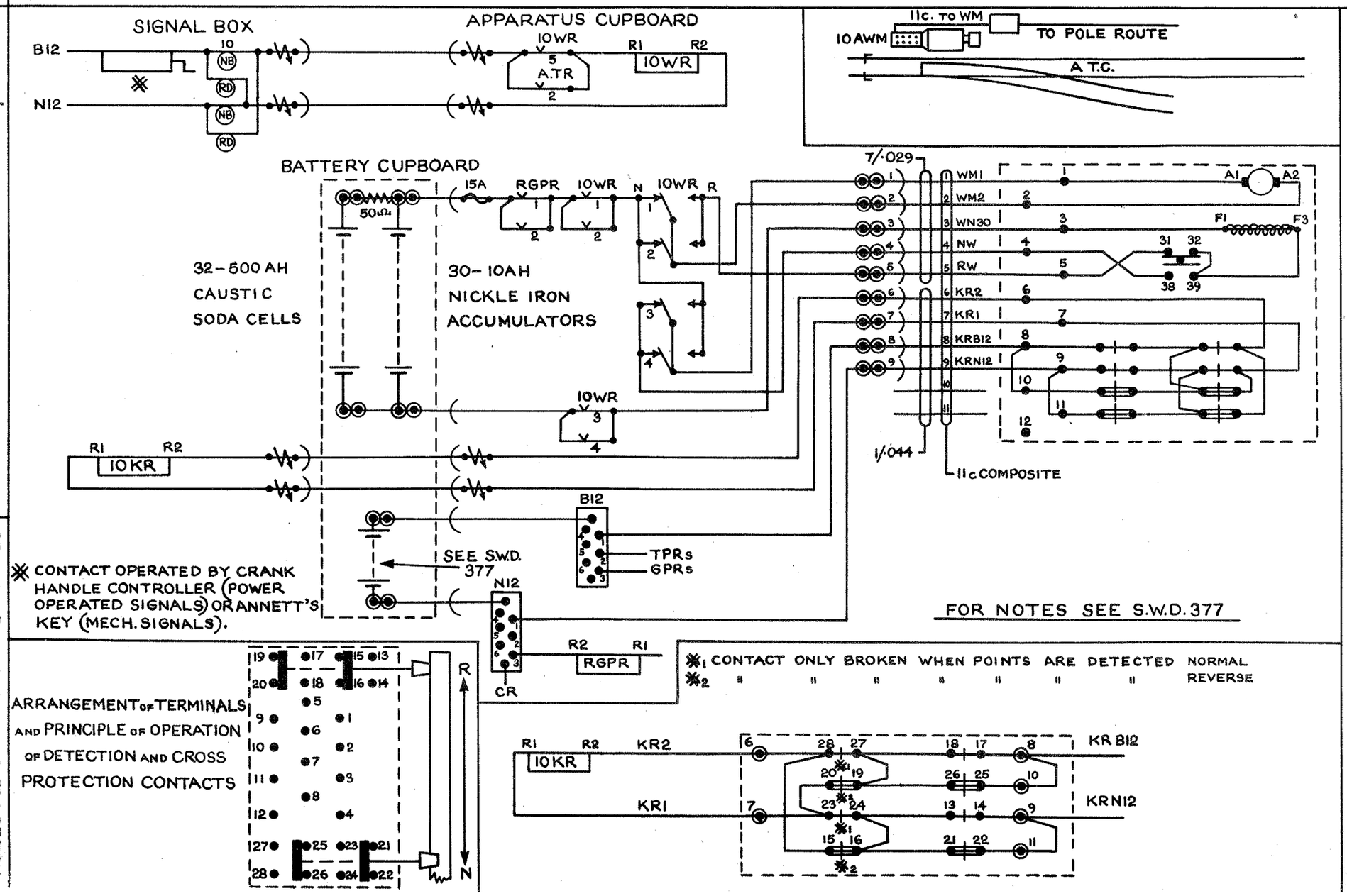

LOW VOLTAGE POINT MACHINE

SINGLE END DETECTION

RIGHT HAND SWITCH CLOSED

MACHINE TYPE S.G.E. HB 541/2

BRITISH RAILWAYS — EASTERN REGION
SIGNAL & TELECOMMUNICATIONS ENGINR
KING'S CROSS STATION, N.1.

DRAWN BY W.B.

TRACED BY W.B.

CHECKED BY N.M.

DATE 31.3.54

SWD 382

8 2 · 52 J.S. A 19·5·52 J.A.S

FORMERLY S.W.D. 80 TYPE Nº OF MACHINE

AMENDED.

STANDARD WIRING DIAGRAM

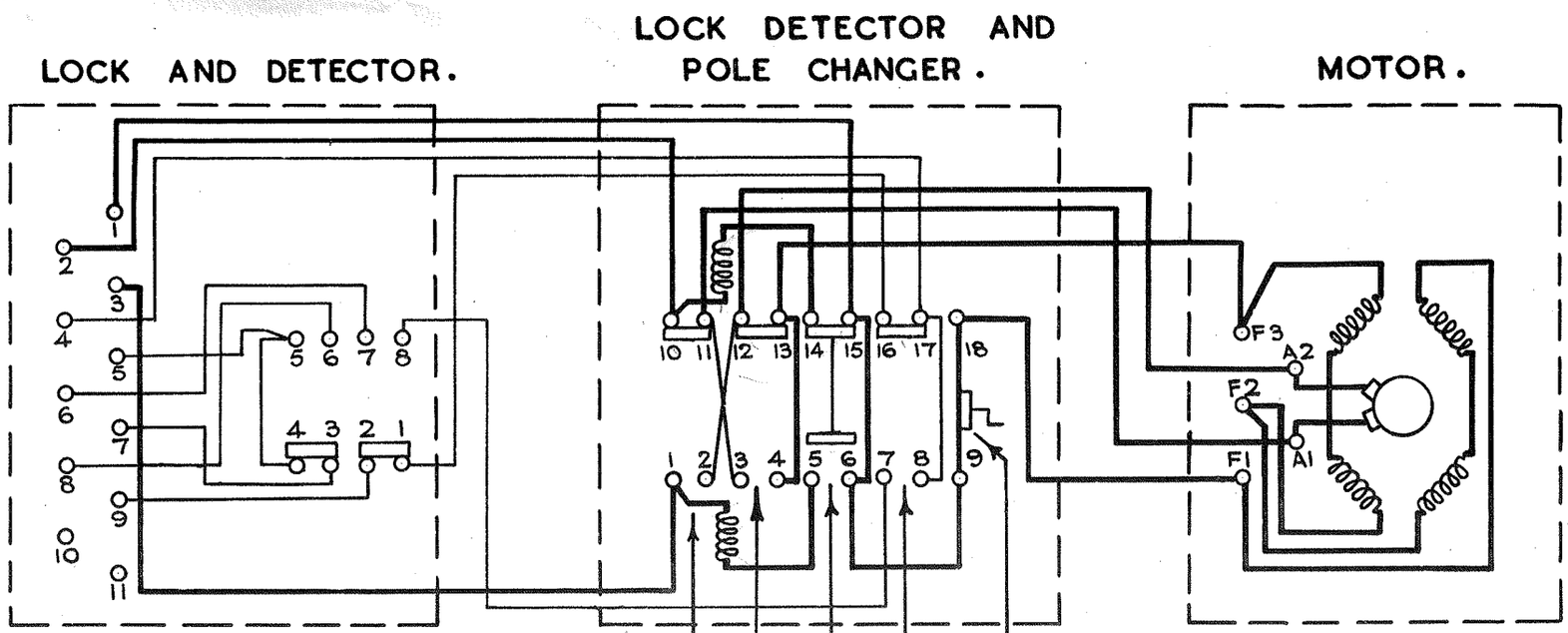

NOTES:-

1. SOLENOID SWITCH CONTACTS BOTH MAKE IMMEDIATELY ON COMMENCEMENT OF STROKE AND CHANGE OVER AT END OF STROKE.
2. POLE CHANGER CONTACTS CHANGE OVER AT END OF STROKE OR ARE PULLED OVER BY THE SOLENOID IF THE MACHINE IS REVERSED DURING STROKE.
3. ISOLATING CONTACT TO BE STRAPPED WHERE INDIVIDUAL HAND CRANKS ARE USED.
4. STROKE OF DRIVE ROD 5".
   STROKE OF LOCK BAR 8½".

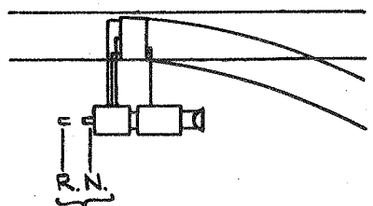

POSITION OF LOCK BAR.

INTERNAL WIRING OF 110 v.

D.C. COMBINED TYPE

POINT MACHINE.

S.G.E. TYPE HB 951.

L.N.E.R. SOUTHERN AREA.

SIGNAL & TELEGRAPH ENGINEER'S OFFICE

KINGS CROSS STATION N.1.

DRAWN BY E.A.R.

TRACED BY J.W.

CHECKED BY

SWD 390A

DATE 11.6.43.

A	Rearranged & redrawn 4.6.43	21-9-50	
B	30-5-47 ONE WAS NA 10 RA NOTE ADDED	FORMERLY SWD 8	A 19-5-52 J.A.S TYPE Nº OF DETECTOR AMENDED
C	5-1-50 Note: Opposite key of points added.		

STANDARD WIRING DIAGRAM

ELECTRICAL DETECTION OF MECHANICAL POINTS.

S.G.E. TYPE HH101 DETECTOR.

NOTE:- WHERE POINTS LAY THE OPPOSITE WAY TO THAT SHOWN, CONTACTS, 9/10 - 11/12 ARE NORMALLY MADE, AND CONNECTIONS TO KR. R1 & R2 MUST BE REVERSED.

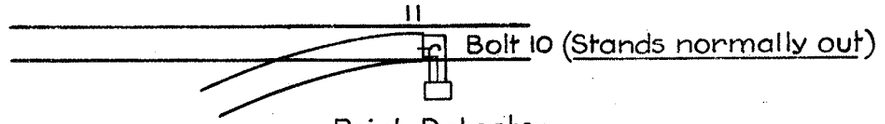

Point Detector
S.G.E. Type HH101.

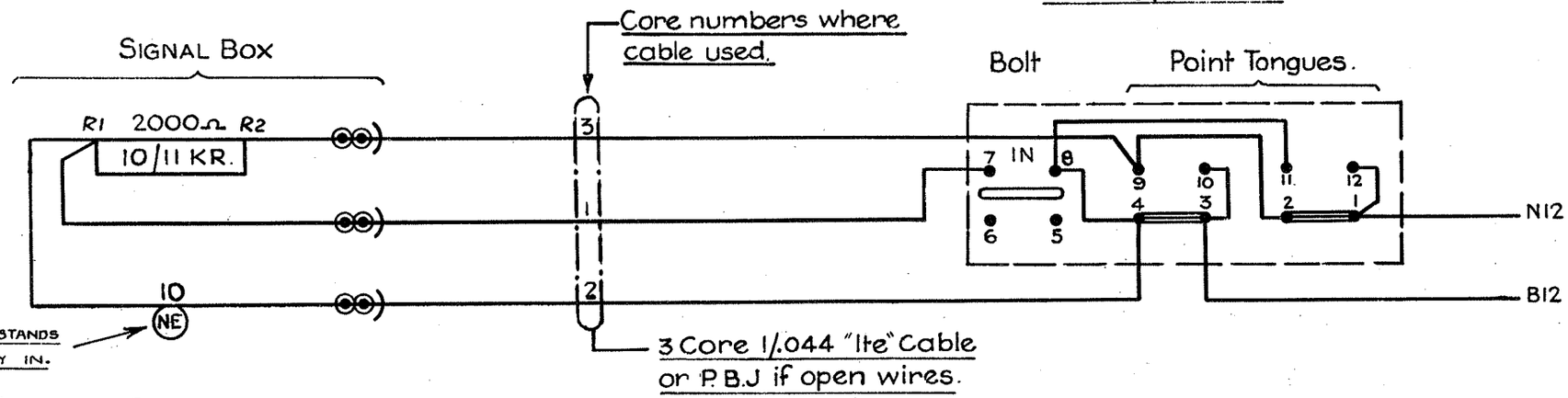

1 External Battery Feed

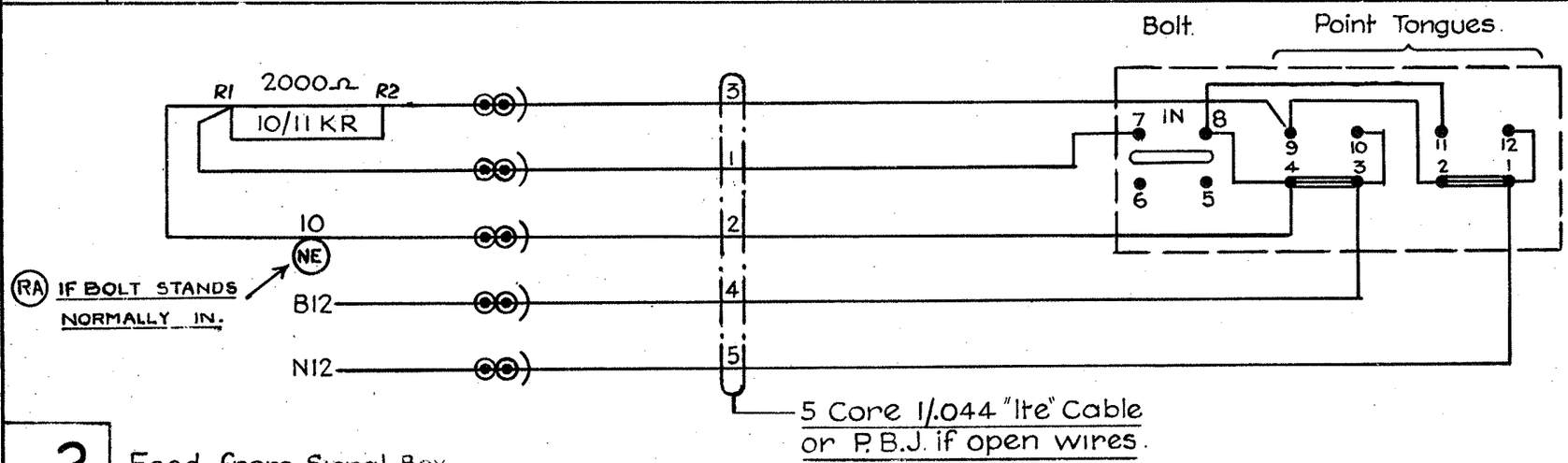

2 Feed from Signal Box

L.N.E.R. SOUTHERN AREA.
SIGNAL & TELEGRAPH ENGINEER'S OFFICE
KINGS CROSS STATION. N.1.

DRAWN BY
TRACED BY W.T.
CHECKED BY
DATE 4. 6. 43

SWD395

STANDARD WIRING DIAGRAM.

Copy sent to all Junction & Gate box [illegible]

NOTE – WHERE POINTS LAY THE OPPOSITE WAY TO THAT SHOWN CONTACTS 7/8 – 9/10 ARE NORMALLY MADE AND CONNECTIONS TO KR. R1. & R2 MUST BE REVERSED.

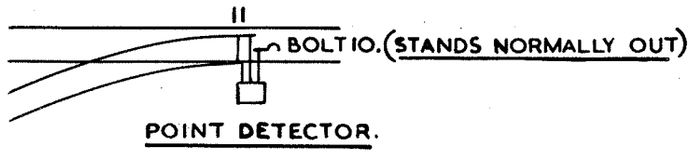

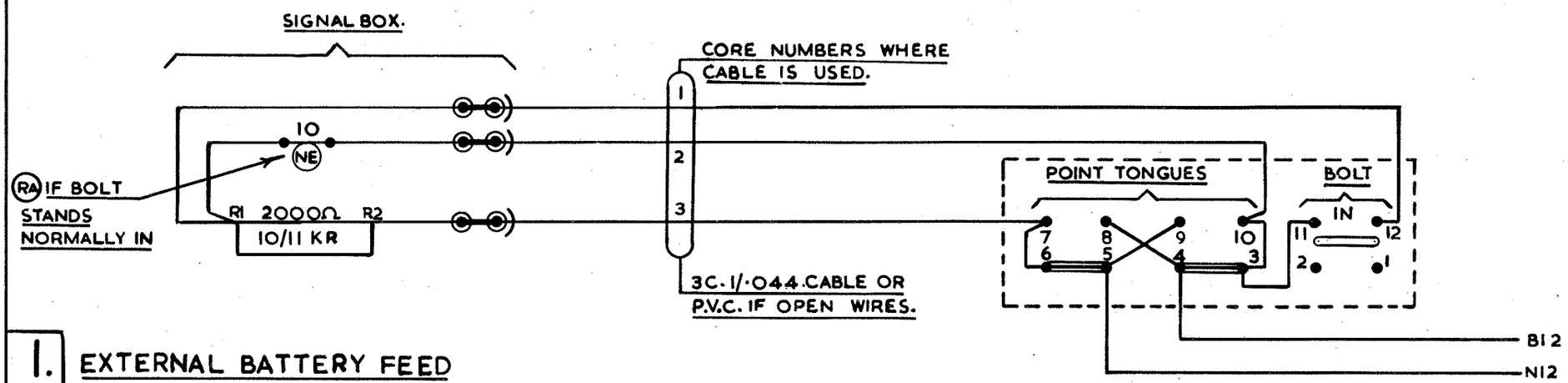

1. EXTERNAL BATTERY FEED

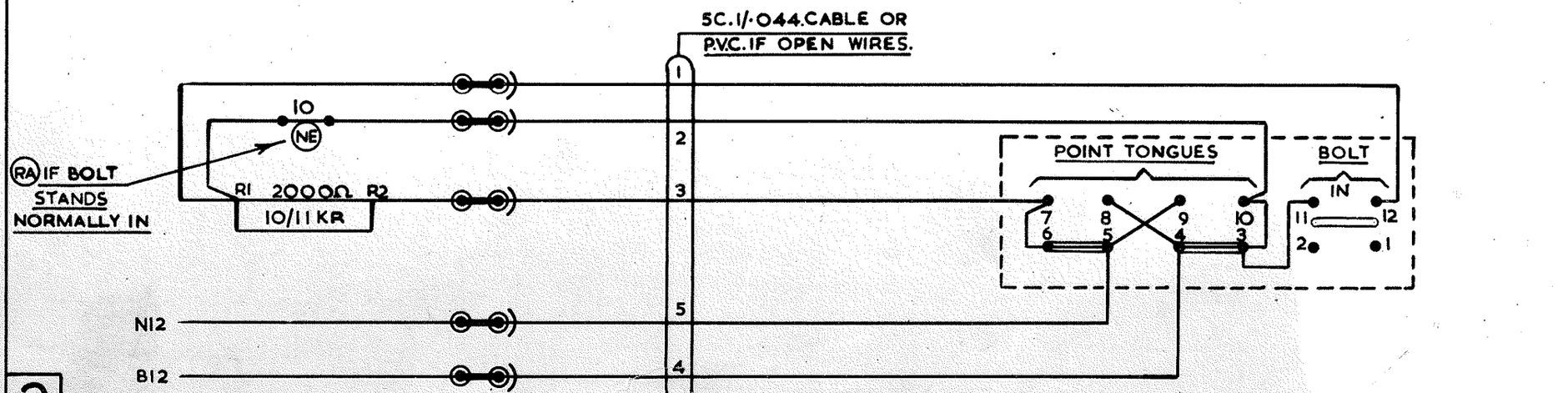

2. FEED FROM SIGNAL BOX.

ELECTRICAL DETECTION OF MECHANICAL POINTS. (NEW STANDARD)

B.R.–E.R.
SIGNAL ENGINEERS DEPARTMENT.
KINGS CROSS STATION.

DRAWN BY. H.J.R.
TRACED BY. H.J.R.
CHECKED BY. N.M.

SWD396.

DATE. 16-4-57.

STANDARD WIRING DIAGRAM

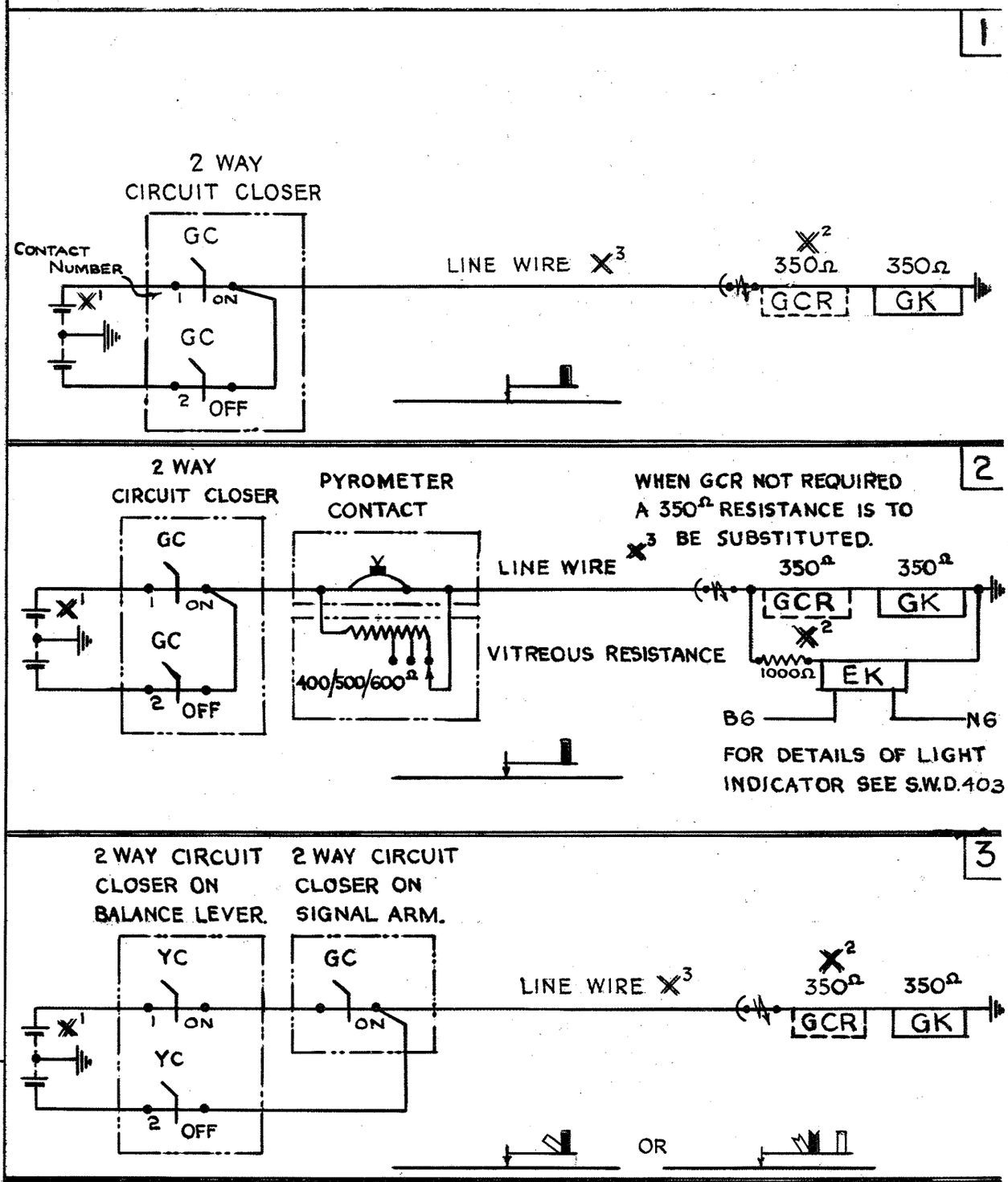

X1 BATTERIES REQUIRED (SEE BELOW)

CIRCUIT	NUMBER OF CELLS	
	"ON" SIDE	"OFF" SIDE
ITEMS 1 & 3 (WITHOUT GCR)	2	2
ITEMS 1 & 3 (WITH GCR)	5	3
ITEM 2	7	7

Nº1 SAC CELLS FOR SINGLE REPEATER.
AD 236 CELLS FOR MORE THAN ONE REPEATER FED FROM SAME BATTERY.

NOTES

X2 GCRs

FOR SINGLE CIRCUIT USE SCH. 415, ITEM 435/1. (ROUND BRASS CASE NEUTRAL BIAS, 350Ω.)

FOR DOUBLE CIRCUIT USE SCH. 415, ITEM 430/10 (SQUARE, WOODEN CASE, NEUTRAL BIAS, 350Ω.)

X3 LINE WIRE

150lbs. CU. IN INDUSTRIAL AREAS,
100lbs. CADMIUM CU. ELSEWHERE.

SIGNAL REPEATER CIRCUITS.

1. ARM ONLY
2. ARM & LIGHT
3. ARM & BALANCE LEVER (CONTROLLED SIGNAL)

L.N.E.R. SOUTHERN AREA.
SIGNAL & TELEGRAPH ENGINEER'S OFFICE
KINGS CROSS STATION. N.1.

DRAWN BY E.A.R.
TRACED BY T.W.E.
CHECKED BY
DATE

SWD.401 A

A	ITEM REFERENCE CHANGED. BATTERY CELL DESCRIPTIONS ADDED	6-8-48	JAS.
B	1000Ω RESISTANCE INCLUDED IN EK CIRCUIT. LINE WIRE AMENDED	21-9-50	JAS.
C	FORMERLY SWD 5 INDICATION LIMITS DELETED.	19-5-52	JAS.
D	0° SETTING OF CC's AMENDED TO "ON" EKO NOTE AMENDED		

STANDARD WIRING DIAGRAM

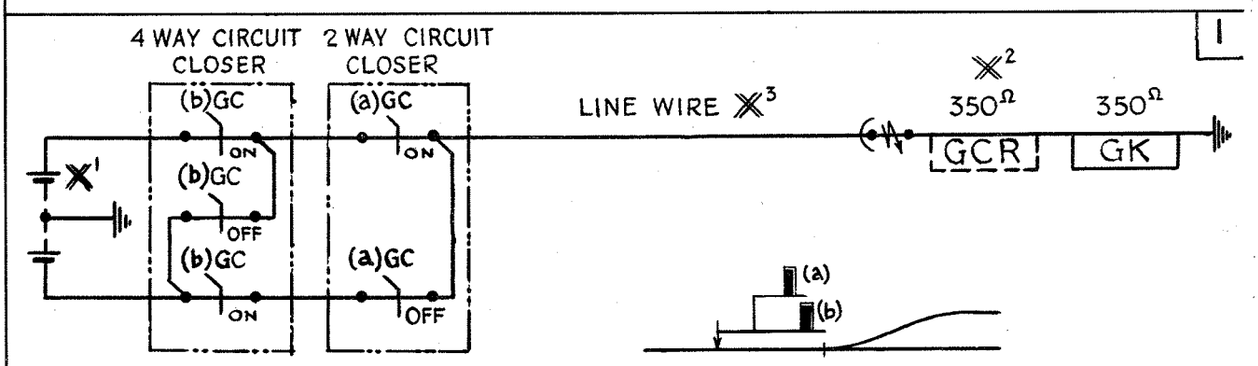

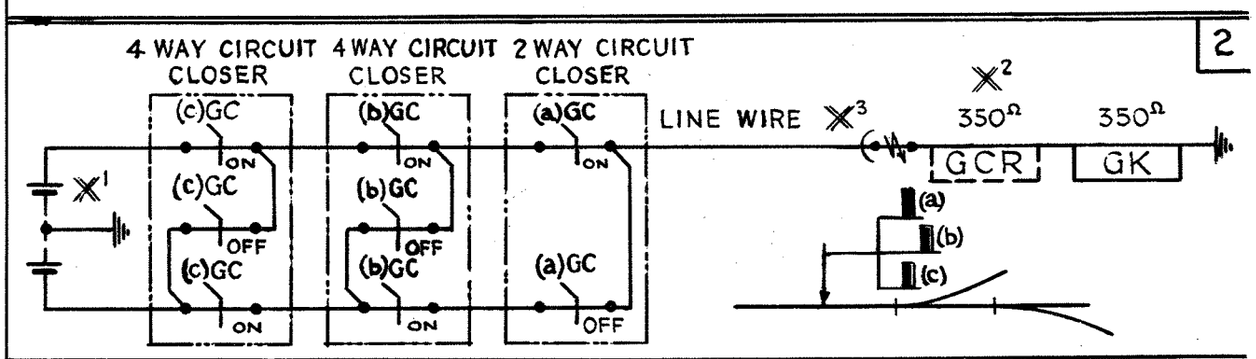

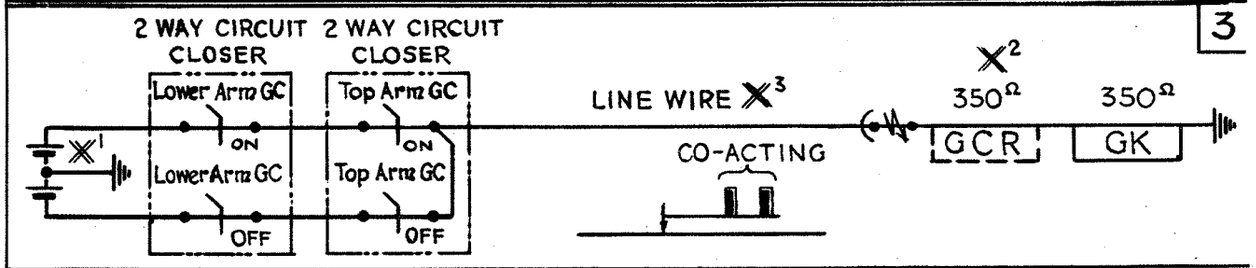

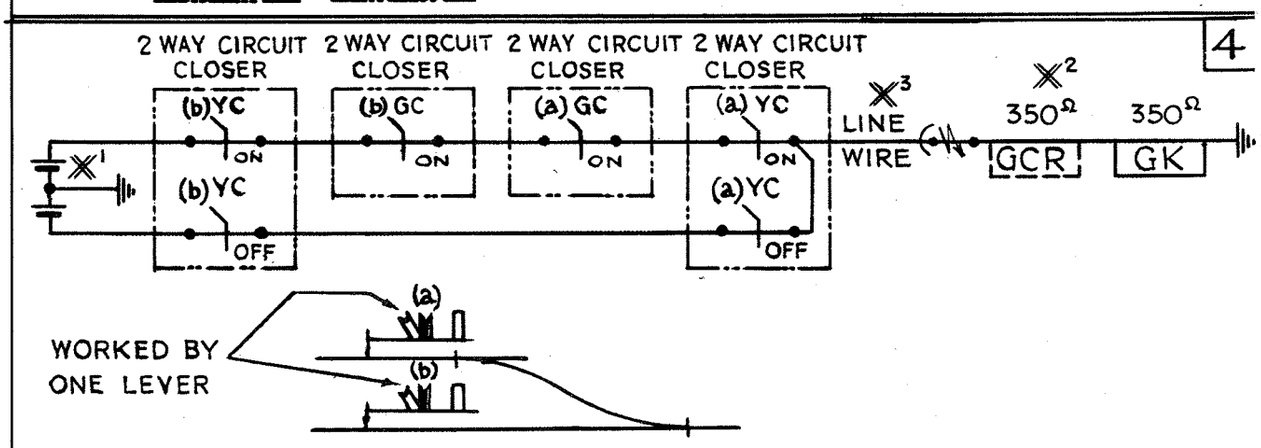

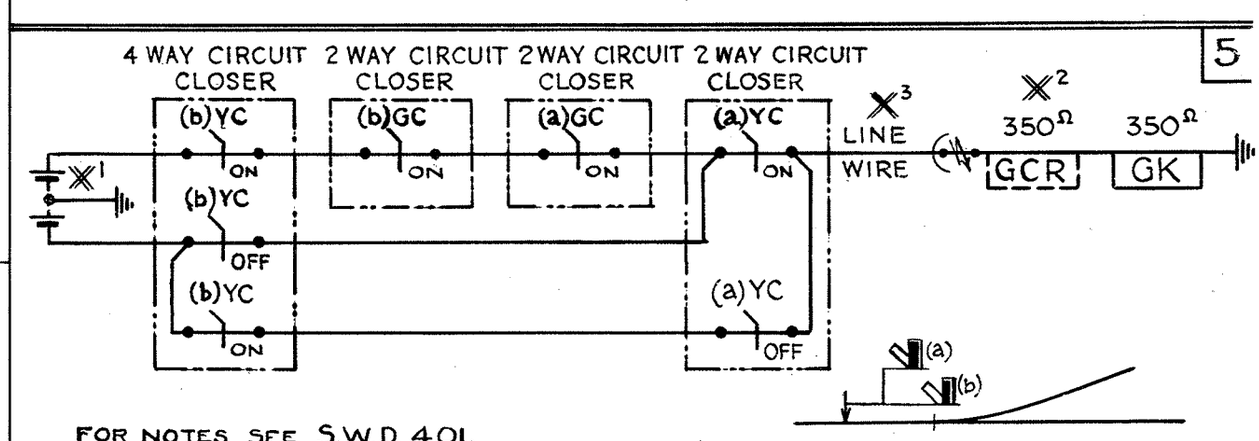

FOR NOTES SEE S.W.D. 401.

SIGNAL REPEATER CIRCUITS

1. ARMS ONLY, FOR TWO DIVERGING LINES.
2. ARMS ONLY, FOR THREE DIVERGING LINES.
3. ARMS ONLY, FOR TWO CO-ACTING.
4. ARMS & SLOTS, FOR TWO CONVERGING LINES.
5. ARMS & SLOTS, FOR TWO DIVERGING LINES.

L.N.E.R. SOUTHERN AREA.
SIGNAL & TELEGRAPH ENGINEER'S OFFICE
KINGS CROSS STATION. N.1.

DRAWN BY E.A.R.	S.W.D.402 A
TRACED BY T.W.E.	
CHECKED BY	DATE 15. 11. 40.

21-9-50		A	19-5-52 J.A.S.
FORMERLY S.W.D.6			0° SETTING OF CC'S AMENDED TO "ON"

STANDARD WIRING DIAGRAM

1

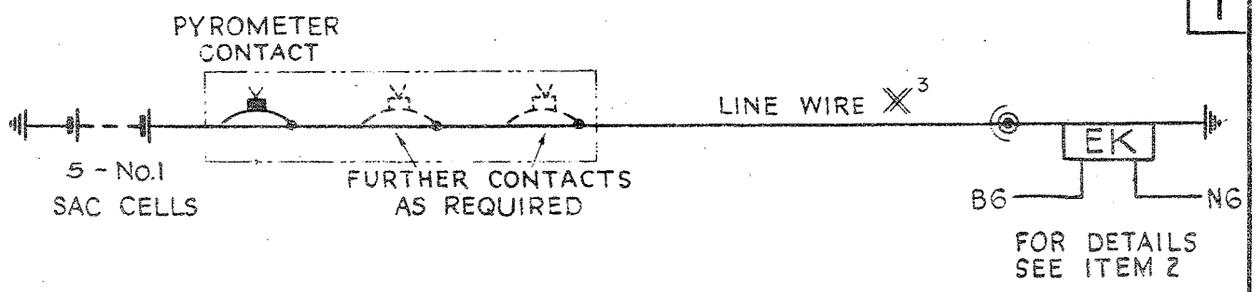

2

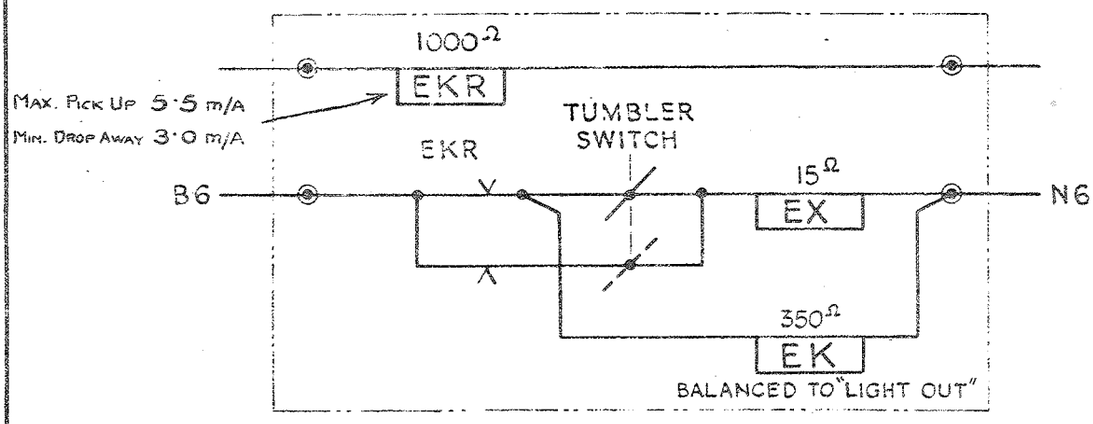

LIGHT INDICATOR UNIT

WHERE AVAILABLE, THE CABIN BATTERY IS TO BE TAPPED TO OBTAIN THE 6v. LOCAL SUPPLY.

FOR NOTES SEE S.W.D.401

SIGNAL REPEATER CIRCUITS

1. LIGHT ONLY
2. LIGHT INDICATOR UNIT (INTERNAL WIRING)

L.N.E.R. SOUTHERN AREA.
SIGNAL & TELEGRAPH ENGINEER'S OFFICE
KINGS CROSS STATION. N.1.

DRAWN BY E.A.R.
TRACED BY T.W.E.
CHECKED BY
SWD.403
DATE 20. 11. 40.

A	ITEM REFERENCE CHANGED.	
B	6-8-48	ITEM Nº1. 7 CELLS REDUCED ITEM Nº2. RELAY CHARACTERISTICS ADDED.
	21-9-50	FORMERLY S.W.D.7.

STANDARD WIRING DIAGRAM

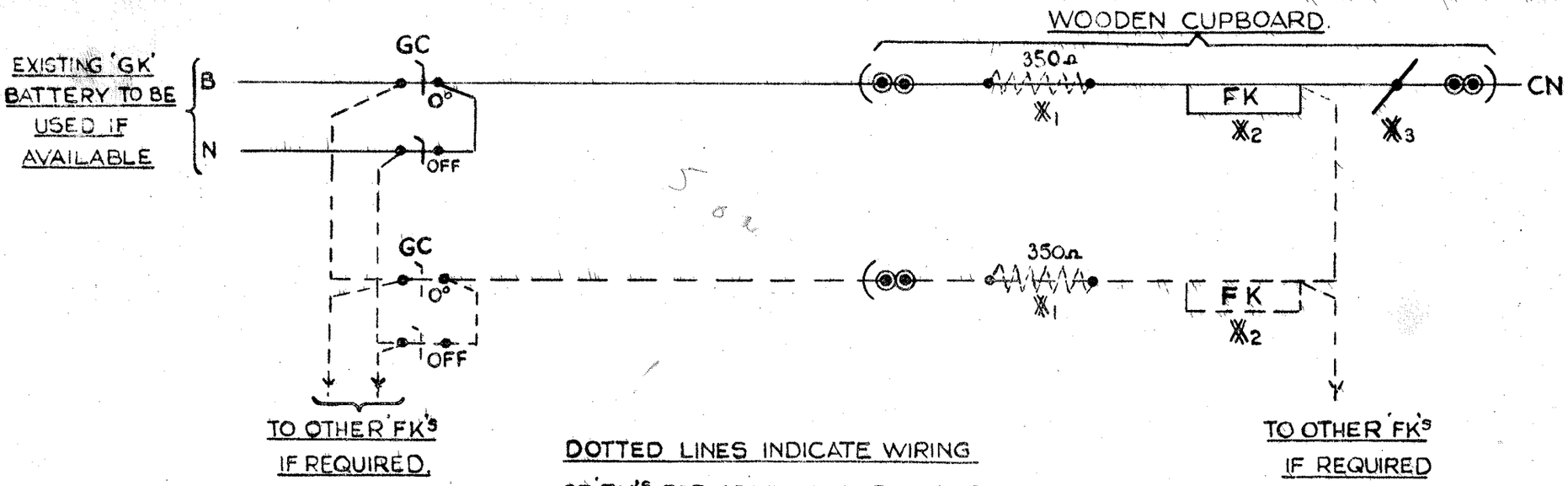

DOTTED LINES INDICATE WIRING OF 'FK's FOR ADDITIONAL SIGNALS ON THE SAME POST.

X1 RESISTANCE, IF REQUIRED, WHEN USING 'GK/GCR' BATTERY.

X2 350Ω NEEDLE TYPE SIGNAL INDICATOR BIASSED TO 'ON'.

X3 ECONOMISER CONTACT OPERATED BY CUPBOARD DOOR.

FOGSIGNALMENS' ELECTRICAL REPEATER CIRCUIT.

RAILWAY EXECUTIVE - EASTERN REGION.
SIGNAL & TELEGRAPH ENGINEER'S OFFICE
KINGS CROSS STATION, N.1.

DRAWN BY N.M.
TRACED BY
CHECKED BY
DATE 20·6·52

SWD408

STANDARD WIRING DIAGRAM

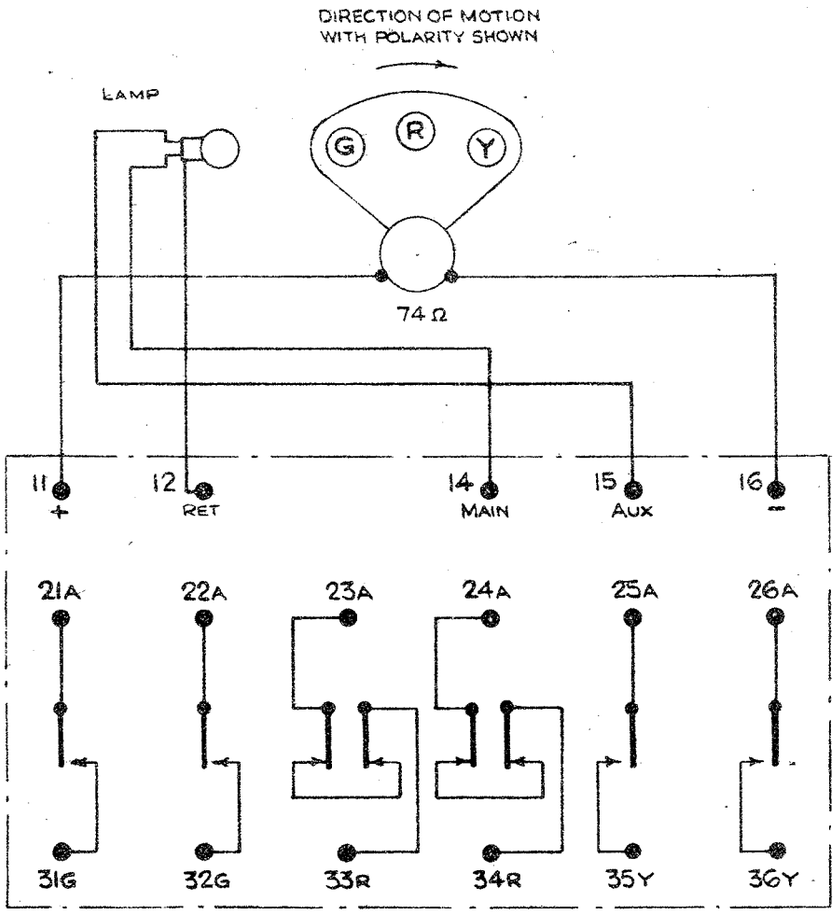

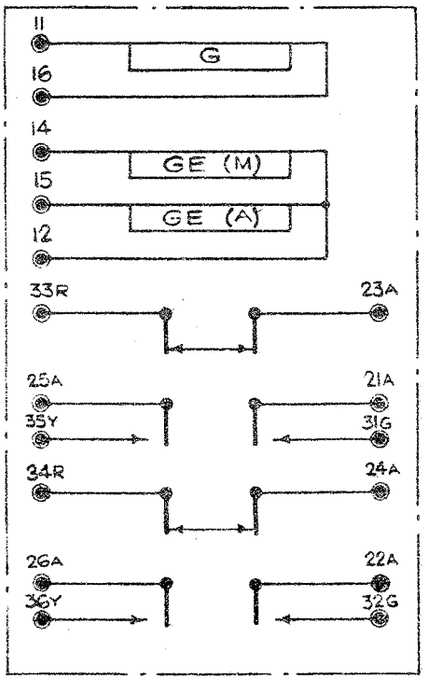

G.R.S. TYPE SA. SEARCHLIGHT SIGNAL.

WITH TWO SETS OF PROVING CONTACTS.

INTERNAL CONNECTIONS.

L.N.E.R. SOUTHERN AREA.
SIGNAL & TELEGRAPH ENGINEER'S OFFICE
KINGS CROSS STATION. N.1.

DRAWN BY R.H.C.
TRACED BY
CHECKED BY
DATE 3.8.44

SWD 411.

FORMERLY S.W.D. 33

12 9 50

A	1·2·55

BLOCK SWITCH CONTACT CONNECTED ACROSS A.TR IN FIG.2 INSTEAD OF ACROSS 1 (N) LEVER CONTACT. NM.

STANDARD WIRING DIAGRAM

2 ASPECT COLOUR LIGHT DISTANT SIGNAL. CONTROL CIRCUITS.

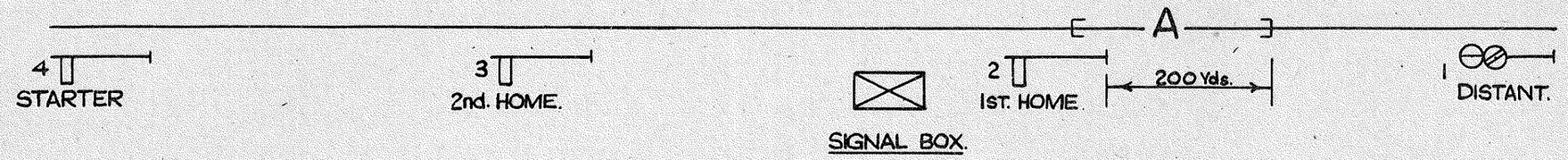

(1) TRACK CIRCUIT NOT PROVIDED AT 1ST. HOME SIGNAL.

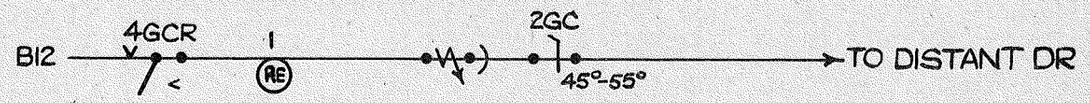

(2) TRACK CIRCUIT PROVIDED AT 1ST. HOME SIGNAL.
3 WIRE 3 POSITION SN BLOCK.

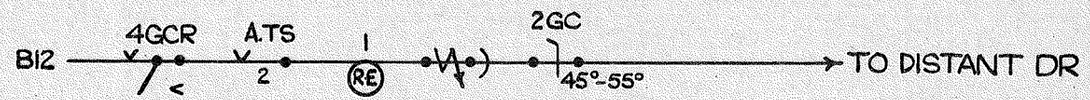

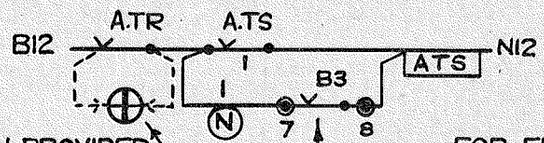

BLOCK SWITCH PROVIDED IF BOX SWITCHES OUT.

FOR FURTHER DETAILS OF 'B' RELAY (BZR) SEE S.W.D 300.

(3) TRACK CIRCUIT PROVIDED AT 1ST. HOME SIGNAL.
1 WIRE 2 POSITION TYERS BLOCK.

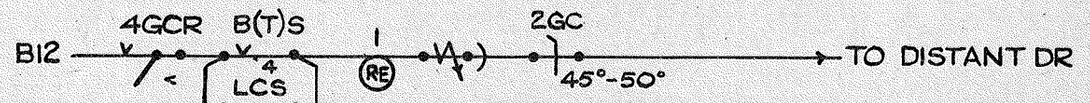

BLOCK SWITCH PROVIDED IF BOX SWITCHES OUT.

NOTES

ARMS TO BE PROVED OFF IN THE FOLLOWING CASES:-

1. SIGNALS WHICH ARE REPEATED.
2. SIGNALS WITH MECHANICAL DETECTION.
3. WHERE THE CONTROL WIRE OF THE DR PASSES BY A SIGNAL.

FOR COMPLETE WIRING OF BLOCK INSTRUMENTS,
SEE DRAWING S.W.D. 300. (3 WIRE, 3 POSITION.)
" " S.W.D. 322. (1 WIRE, 2 POSITION.)

RAILWAY EXECUTIVE-EASTERN REGION.
SIGNAL & TELECOMMUNICATIONS ENGR. OFFICE.
KINGS CROSS STATION, N.1.

DRAWN BY V.C.
TRACED BY R.S.T.
CHECKED BY N.M.
DATE. 10·2·53

SWD 416.A

STANDARD WIRING DIAGRAM

INTERMEDIATE BLOCK SIGNAL

"TRAIN RUNNING AWAY" INDICATION

SEPARATE OVERLAP TRACK NOT PROVIDED

NO SEPARATE OVERLAP TRACK PROVIDED

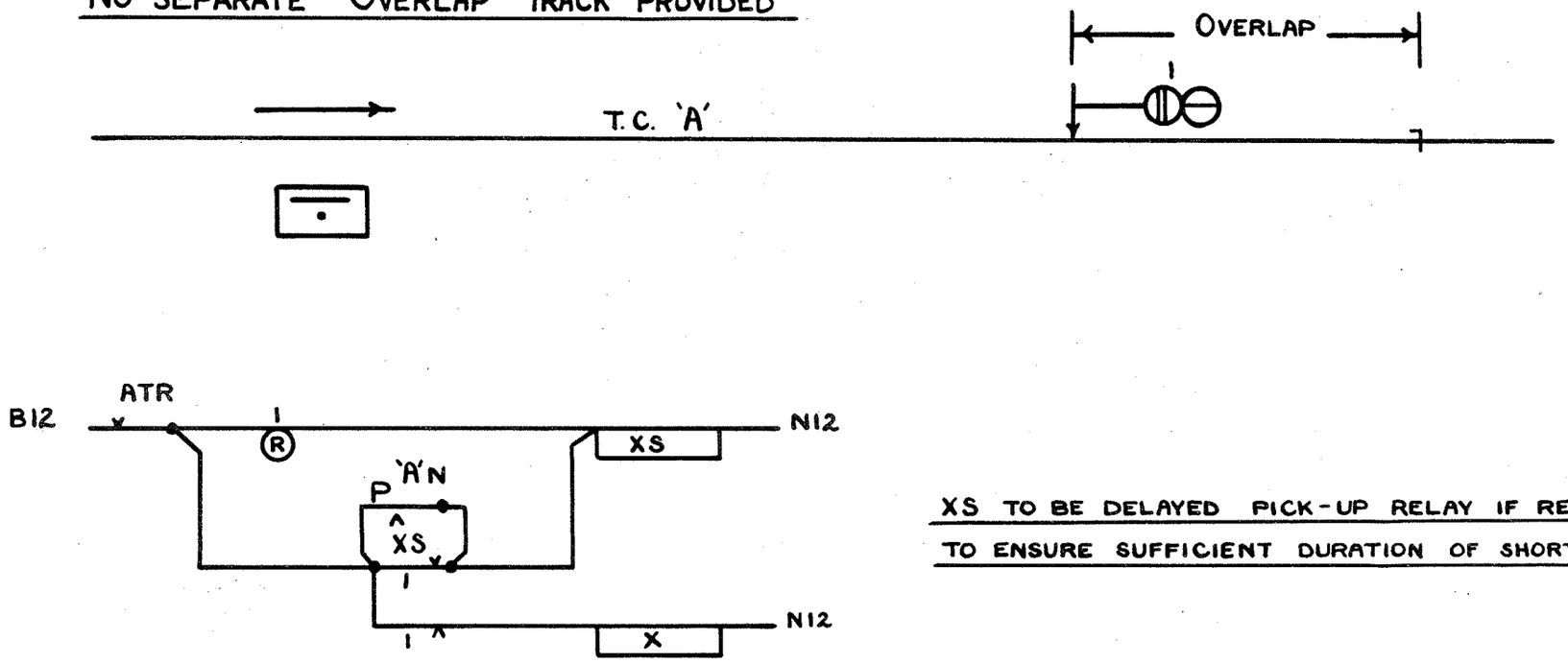

XS TO BE DELAYED PICK-UP RELAY IF REQUIRED, TO ENSURE SUFFICIENT DURATION OF SHORT RING.

NOTES.

IF LEVER No. 1 IS REVERSE, A SHORT RING IS GIVEN WHEN THE TRAIN CLEARS THE OVERLAP.

IF LEVER No. 1 IS NORMAL, A CONTINUOUS RING IS GIVEN WHEN THE TRAIN CLEARS THE OVERLAP.

'A'N = ACKNOWLEDGEMENT PLUNGER.

RAILWAY EXECUTIVE - EASTERN REGION
SIGNAL & TELECOMMUNICATIONS ENGR. OFFICE
KINGS CROSS STATION N.1.

DRAWN BY V.C.
TRACED BY Y.R.
CHECKED BY N.M

S.W.D. 420

DATE 23.3.53.

STANDARD WIRING DIAGRAM

INTERMEDIATE BLOCK SIGNAL

"TRAIN RUNNING AWAY" INDICATION

SEPARATE OVERLAP TRACK PROVIDED

SEPARATE OVERLAP TRACK PROVIDED.

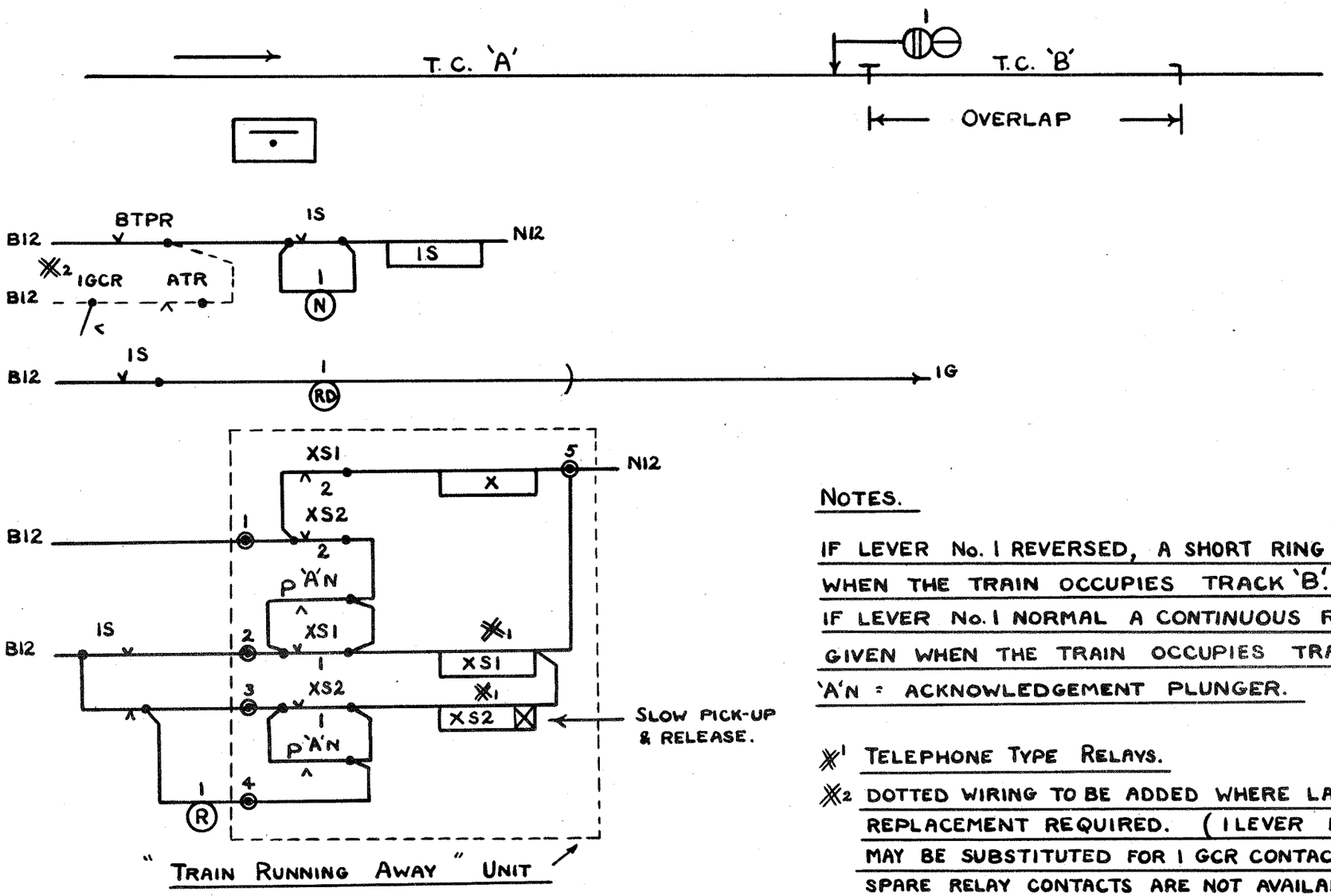

NOTES.

IF LEVER No. 1 REVERSED, A SHORT RING IS GIVEN WHEN THE TRAIN OCCUPIES TRACK 'B'.

IF LEVER No. 1 NORMAL A CONTINUOUS RING IS GIVEN WHEN THE TRAIN OCCUPIES TRACK 'B'.

'A'N = ACKNOWLEDGEMENT PLUNGER.

※1 TELEPHONE TYPE RELAYS.

※2 DOTTED WIRING TO BE ADDED WHERE LAST WHEEL REPLACEMENT REQUIRED. (1 LEVER RD CONTACT MAY BE SUBSTITUTED FOR 1 GCR CONTACT WHERE SPARE RELAY CONTACTS ARE NOT AVAILABLE.)

RAILWAY EXECUTIVE - EASTERN REGION
SIGNAL & TELECOMMUNICATIONS ENG^R. OFFICE
KINGS CROSS STATION N.1.

DRAWN BY V.C.
TRACED BY Y.R.
CHECKED BY N.M.

S.W.D. 421

DATE 23.3.53.

STANDARD WIRING DIAGRAM

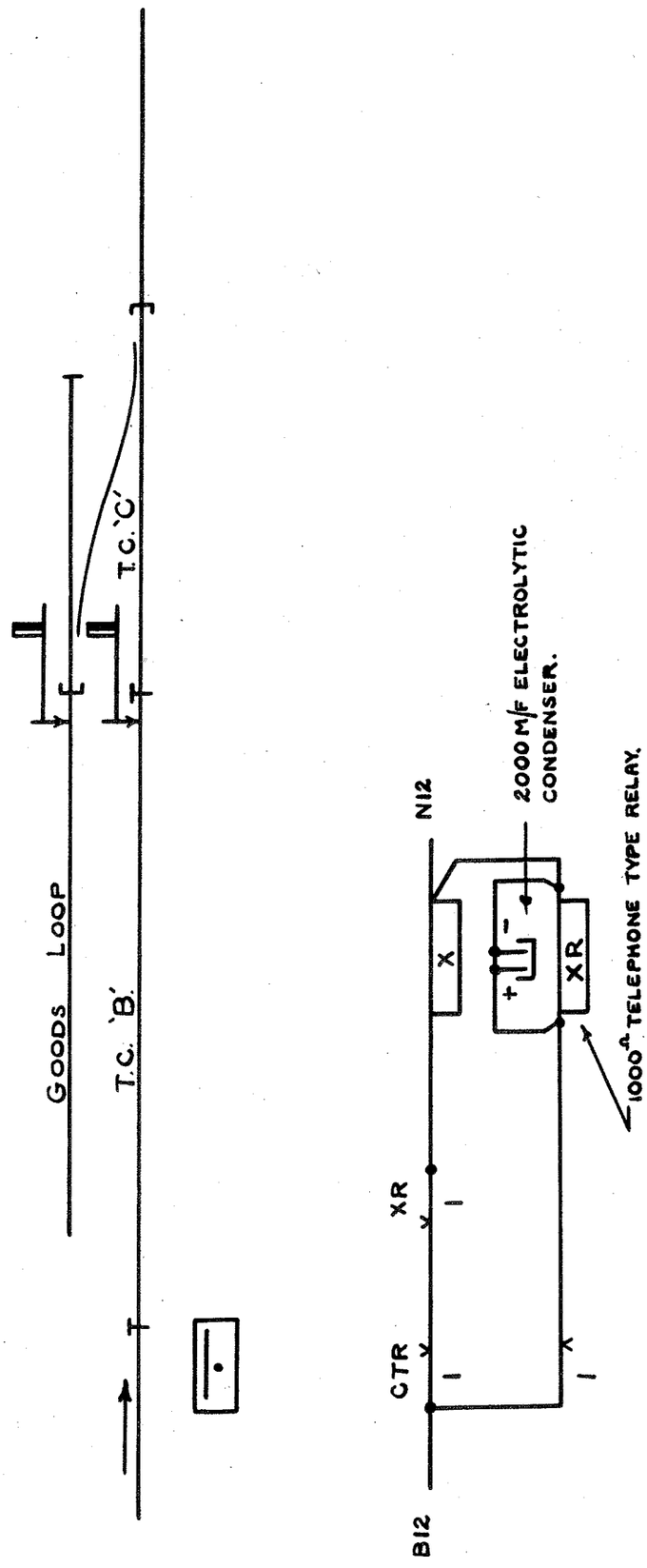

NOTE:- BUZZER SOUNDS WHEN TRACK CIRCUIT OCCUPIED & CLEARED.

INTERMEDIATE BLOCK SIGNAL "TRAIN PAST" AUDIBLE INDICATION CIRCUIT

RAILWAY EXECUTIVE - EASTERN REGION	
SIGNAL & TELECOMMUNICATIONS ENGINEER OFFICE KINGS CROSS STATION N.1.	
DRAWN BY V.C.	S.W.D. 422
TRACED BY Y.R.	
CHECKED BY N.M	DATE 23.3.53.

STANDARD WIRING DIAGRAM

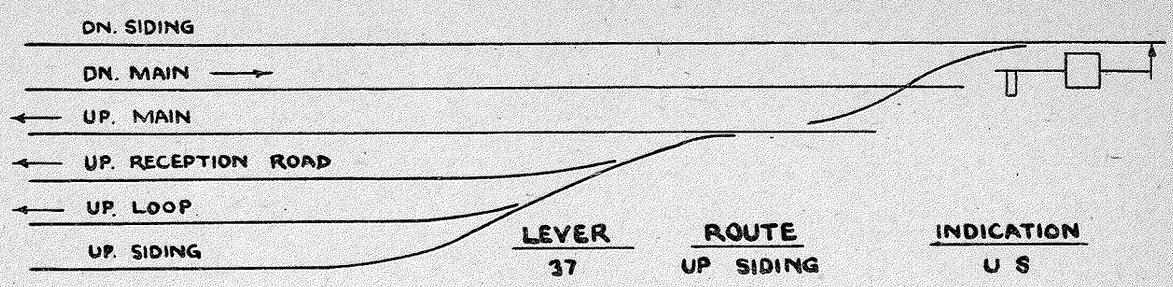

LEVER	ROUTE	INDICATION
37	UP SIDING	U S
38	UP LOOP	L
39	UP RECEPTION	R
40	UP MAIN	M
13	DN. SIDING	D S

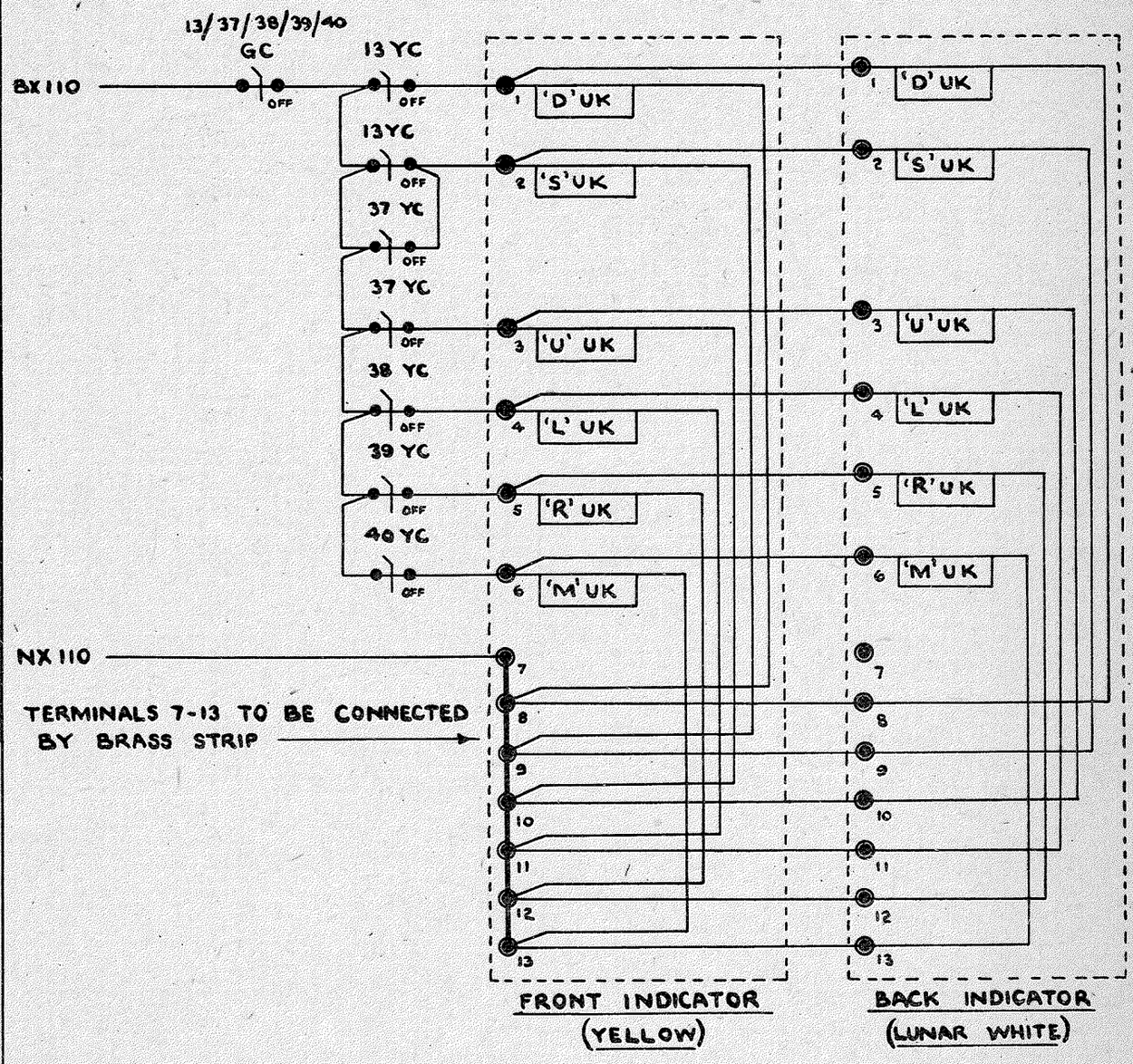

2 - 110V 40W LAMPS USED FOR EACH INDICATION

STENCIL TYPE ROUTE INDICATOR.
(DOUBLE SIDED)

ONE LEVER WITH MECHANICAL DETECTION USED FOR EACH ROUTE.

B.R. ~ E.R.
SIGNAL ENGINEERS OFFICE. KINGS CROSS

DRAWN BY. G.W.B.	SWD430
TRACED BY. J.R.S.	
CHECKED BY.	DATE. 10-10-55.

STANDARD WIRING DIAGRAM

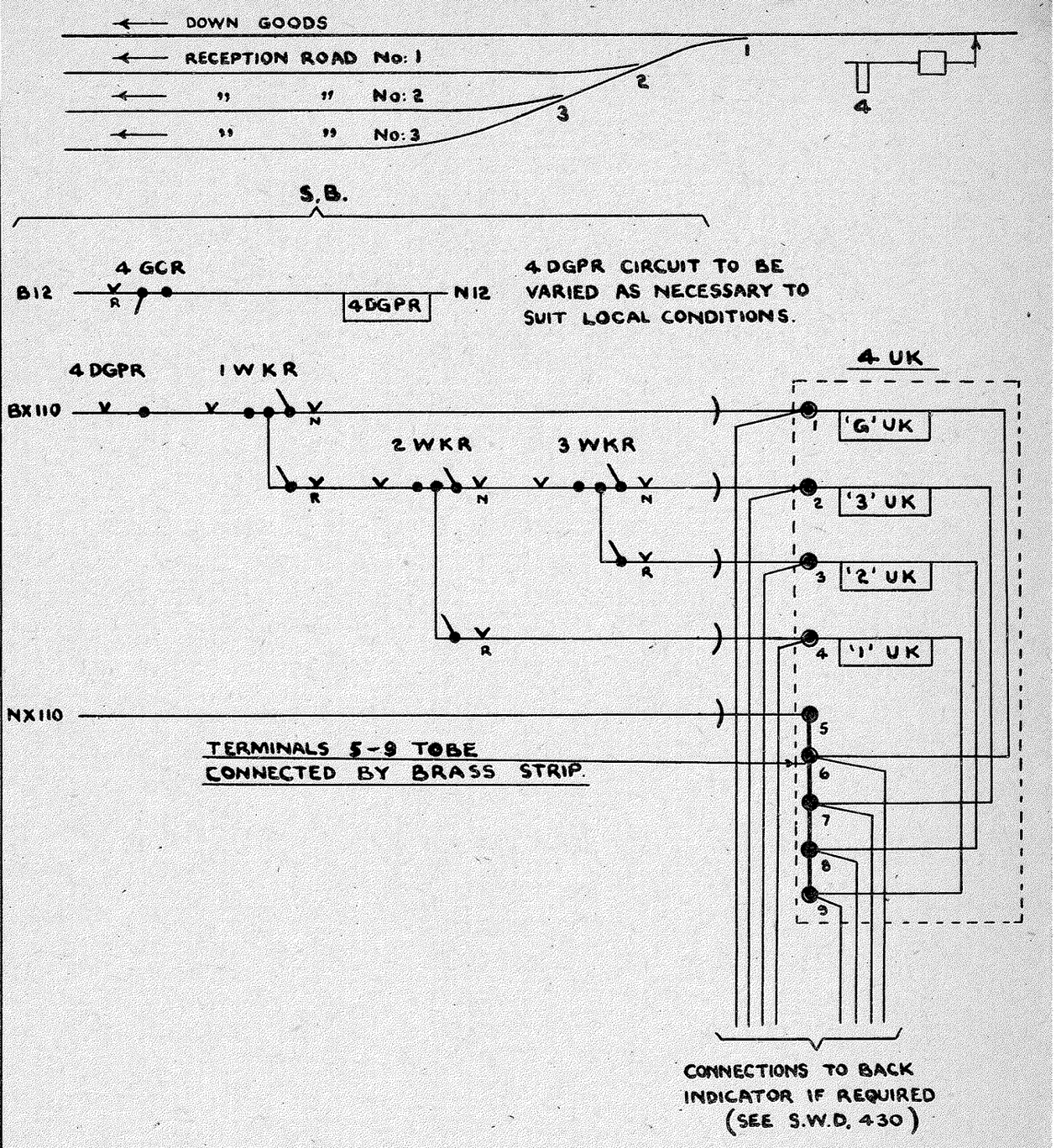

2-110V 40 W LAMPS USED FOR EACH INDICATION.

STENCIL TYPE ROUTE INDICATOR

FOR USE WITH MECHANICAL SIGNAL & USING ELECTRICAL DETECTION.

B. R. ~ E.R.	
SIGNAL ENGINEERS OFFICE. KINGS CROSS.	
DRAWN BY. G.W.B.	SWD431
TRACED BY. J.R.S.	
CHECKED BY.	DATE. 10-10-55.

STANDARD WIRING DIAGRAM

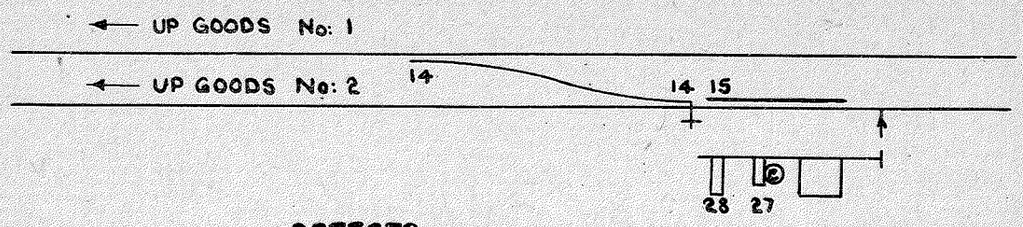

ROUTE LEVER	DETECTS MECHANICALLY	ROUTE	INDICATION
25	14N, 15 R.	UP GOODS No.2.	G 2
26	14R, 15 R.	UP GOODS No.1.	G 1

SIGNAL LEVER

27	14N OR R. 15R.
28	14N OR R. 15R.

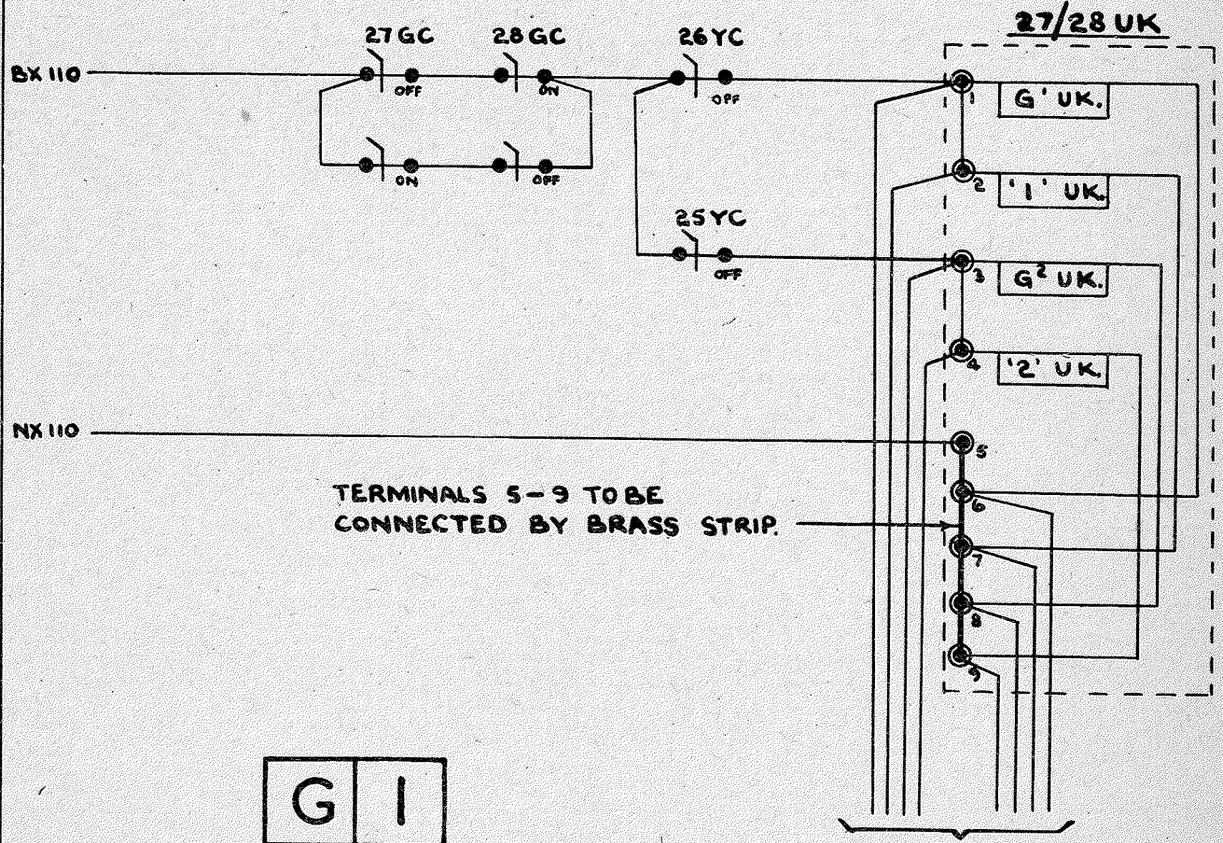

G	1
G	2

ARRANGEMENT OF LETTERS.

2 – 110V 40W LAMPS USED FOR EACH INDICATION

STENCIL TYPE ROUTE INDICATOR

FOR USE WITH MAIN & SUBSIDIARY SIGNALS USING MECHANICAL DETECTION & SEPARATE ROUTE LEVERS.

B.R. ~ E.R.

SIGNAL ENGINEERS OFFICE. KINGS CROSS

DRAWN BY. G.W.B

TRACED BY. J.R.S.

CHECKED BY

DATE. 10-10-55.

SWD 432

STANDARD WIRING DIAGRAM

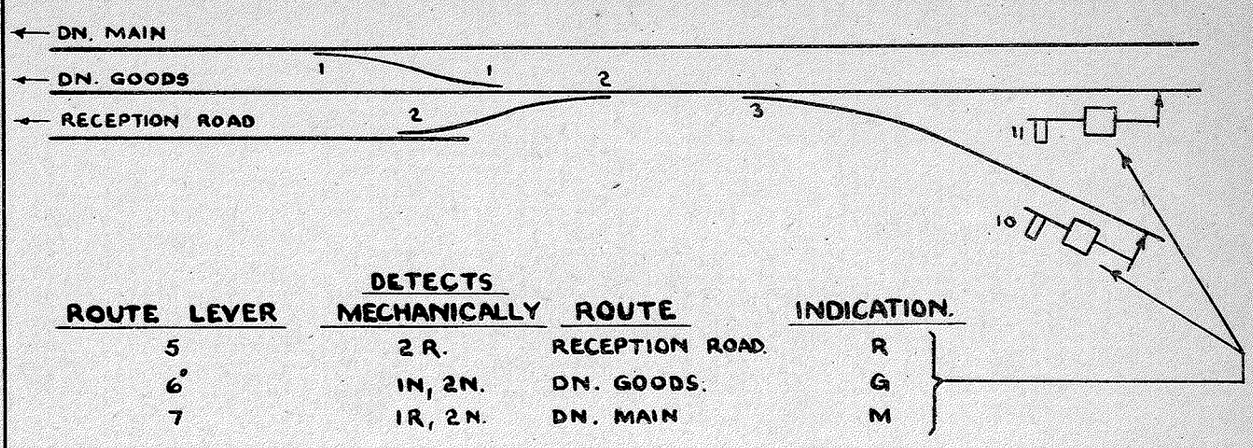

ROUTE LEVER	DETECTS MECHANICALLY	ROUTE	INDICATION.
5	2 R.	RECEPTION ROAD.	R
6	1N, 2N.	DN. GOODS.	G
7	1R, 2N.	DN. MAIN	M

IF LEVERS 10 & 11 NOT AVAILABLE. SIGNAL ARM SELECTED BY No: 3 POINTS

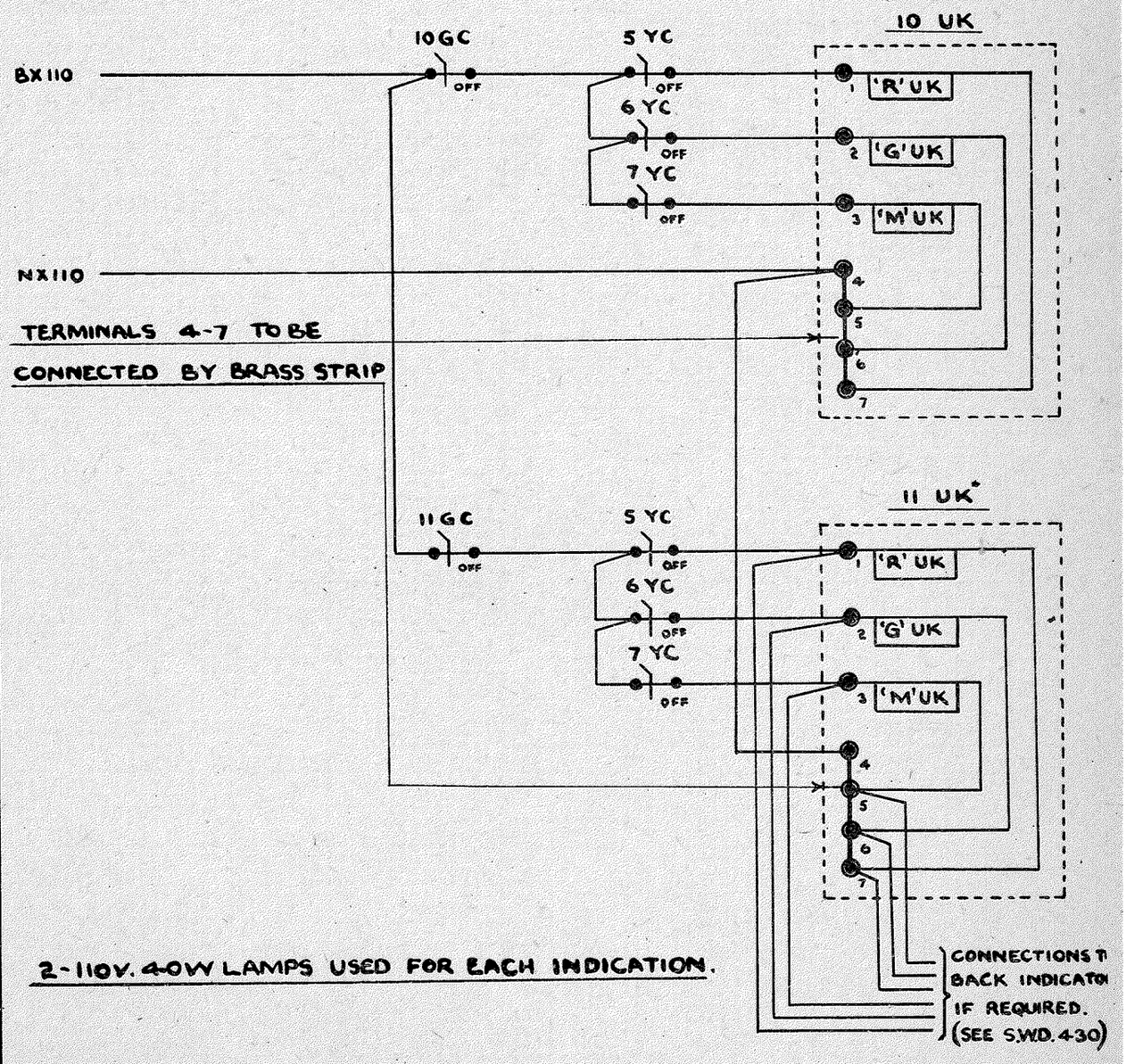

2-110V. 40W LAMPS USED FOR EACH INDICATION.

STENCIL TYPE ROUTE INDICATOR
FOR USE WITH CONVERGING SIGNALS
ROUTE INDICATION SELECTED BY ROUTE
LEVERS WITH MECHANICAL DETECTION.
(WIRE OPERATED)

B.R. ~ E.R.
SIGNAL ENGINEERS OFFICE. KINGS CROSS
DRAWN BY. G.W.B.
TRACED BY. J.R.S.
CHECKED BY. [illegible]
SWD 433
DATE. 10-10-55.

STANDARD WIRING DIAGRAM.

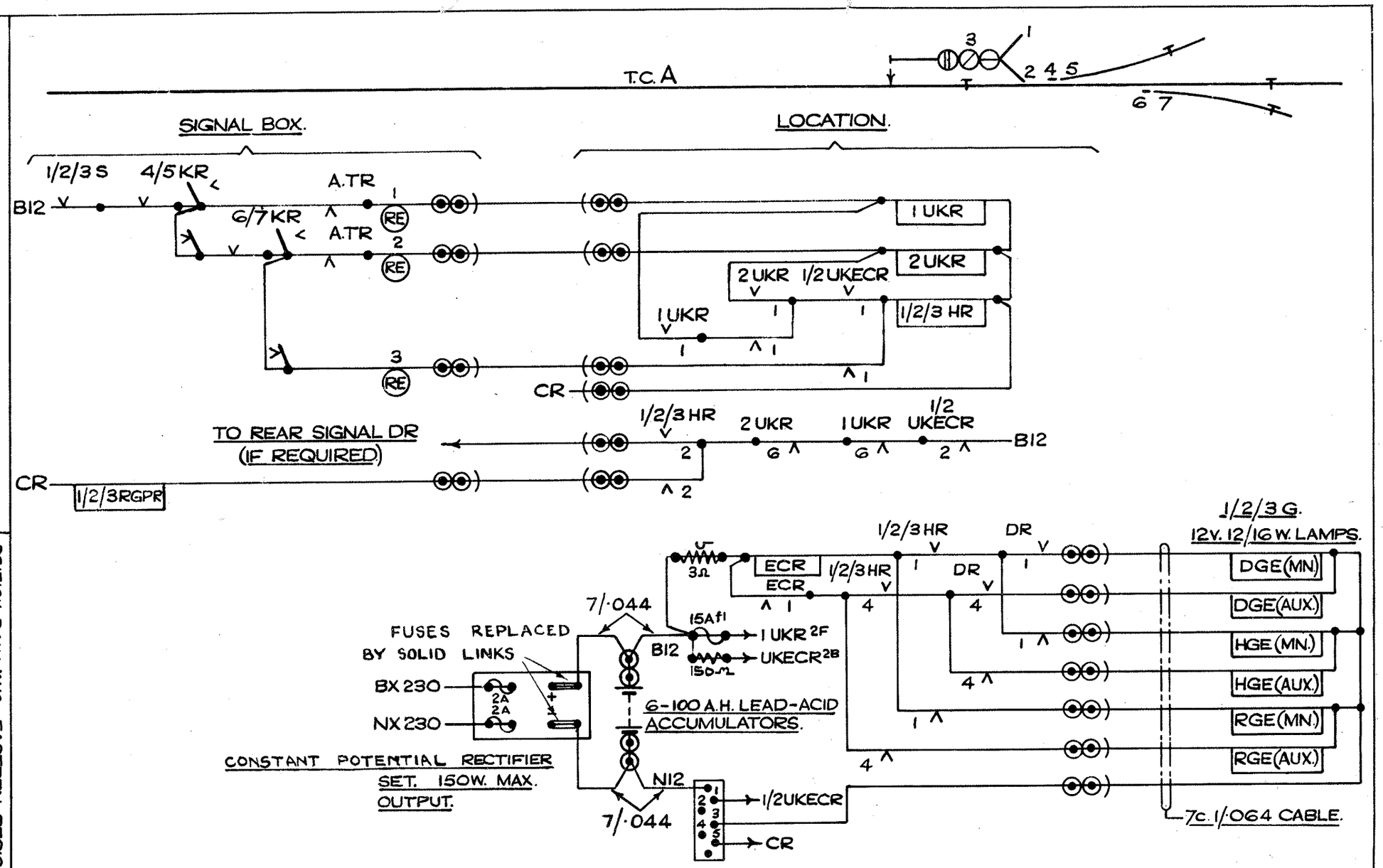

FOR DETAILS OF UKE CIRCUITS, SEE S.W.D. 440.

2 ARM JUNCTION INDICATOR FED FROM TRICKLE CHARGED BATTERY. CONTROL CIRCUIT.

BRITISH RAILWAYS – EASTERN REGION.
SIGNAL ENGINEER'S OFFICE,
KINGS CROSS STATION, LONDON, N.1.

DRAWN BY G.W.B.
TRACED BY R.S.T.
CHECKED BY N.M.
DATE. 21·1·55

SWD.439.

STANDARD WIRING DIAGRAM.

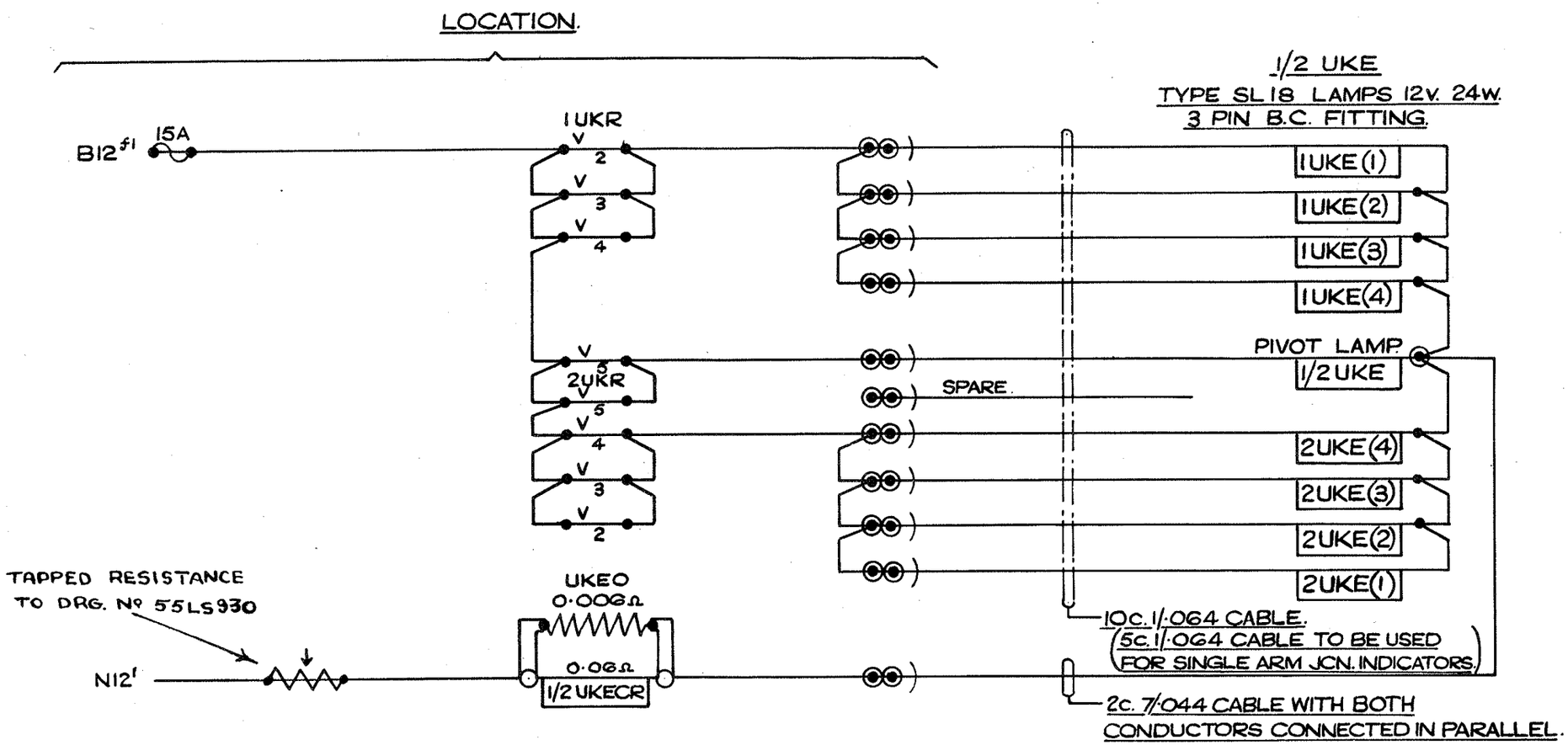

NOTES:- UKEO TO BE ATTACHED DIRECT TO TERMINALS OF 1/2 UKECR.
THE 2c. 7/·044 CONDUCTORS TO BE TERMINATED WITH LUGS.
1/·064 FLAMEPROOF WIRE TO BE USED FOR LOCATION WIRING OF UKE CIRCUITS.
LOCATION TO BE KEPT WITHIN 30YDS OF JCN. INDICATOR & SPECIAL CONSIDERATION SHOULD BE GIVEN TO THE SIZE OF CONDUCTORS WHEN THIS DISTANCE IS EXCEEDED.

2 ARM JUNCTION INDICATOR FED FROM TRICKLE CHARGED BATTERY. LIGHTING CIRCUIT.

BRITISH RAILWAYS - EASTERN REGION.
SIGNAL ENGINEER'S OFFICE.
KINGS CROSS STATION, LONDON, N.1.

DRAWN BY G.W.B.
TRACED BY R.S.T.
CHECKED BY N.M.

SWD.440.

DATE. 21·1·55

A	10/9/40	J.O.G	C	19/3/46	J.O.G.	D 22-12-49 R.S.F.	21-9-50
TELEPHONE REFERENCE ALTERED			RE-DRAWN. CATCH HANDLE CONTACTS REPLACED BY PLUNGERS.			ITEM 2 CIRCUIT REVISED TO INCLUDE ECONOMISER AT G.F. IN LR. CIRCUIT.	FORMERLY S.W.D.1. TELEPHONE NOTE AMENDED.
B		J.O.G					
ITEM REFERENCE ALTERED							

STANDARD GROUND FRAME CONTROL CIRCUITS.

STANDARD WIRING DIAGRAM

1

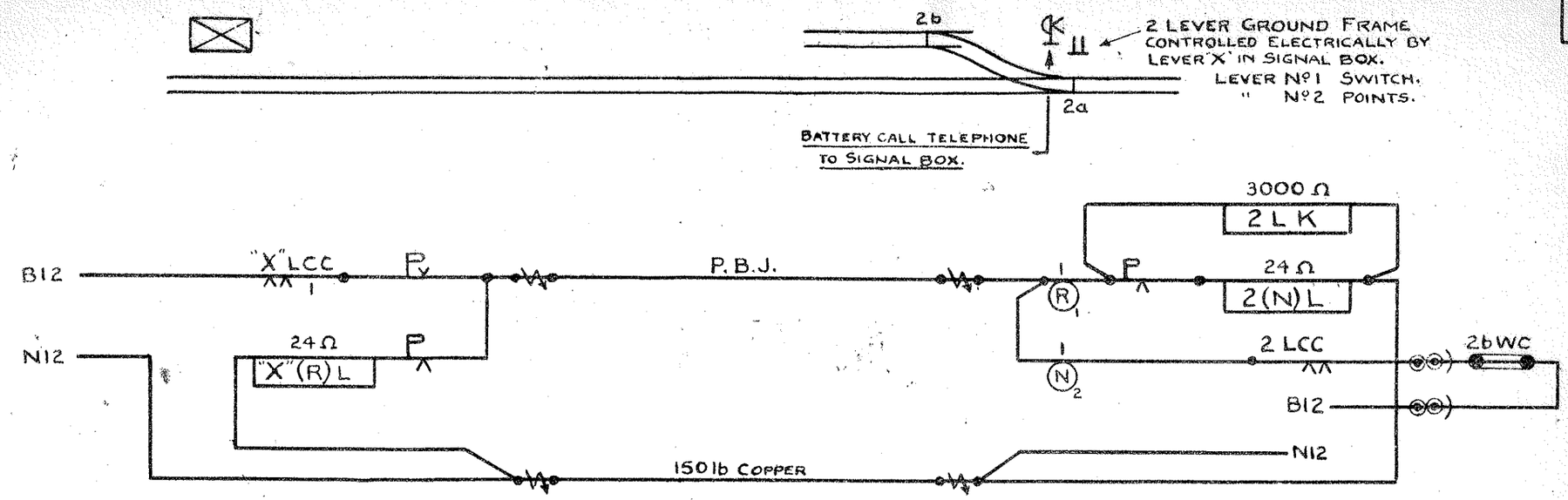

ARRANGEMENT TO BE USED WHEN GROUND FRAME IS NOT MORE THAN 600YDS FROM SIGNAL BOX.

2

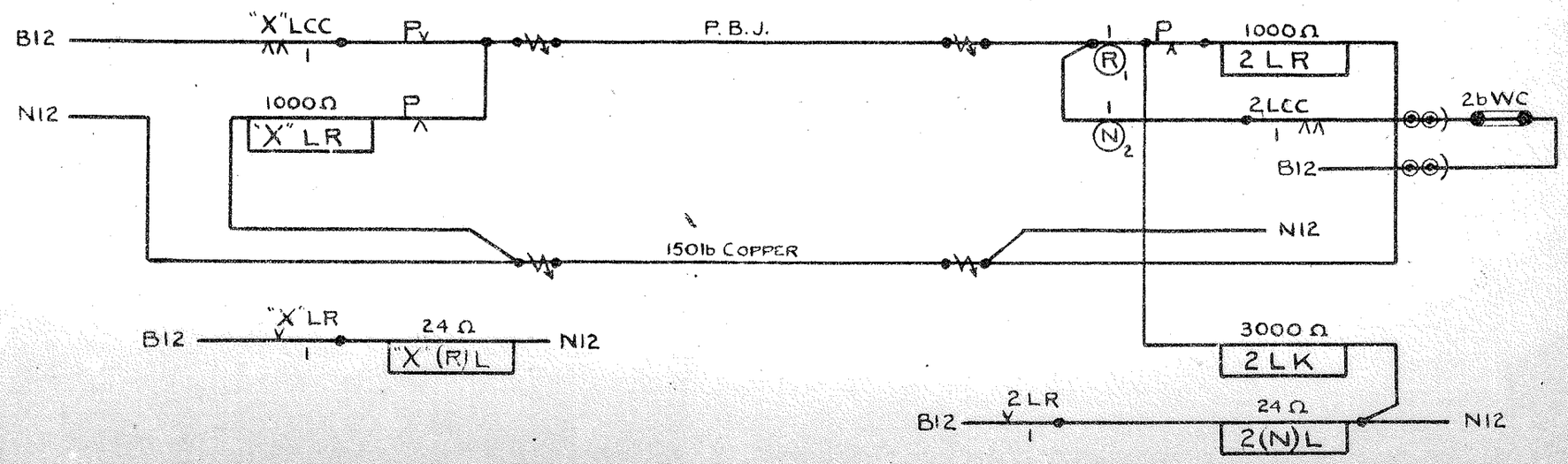

ARRANGEMENT TO BE USED WHEN GROUND FRAME IS MORE THAN 600YDS FROM SIGNAL BOX.

L.N.E.R. SOUTHERN AREA.
SIGNAL & TELEGRAPH ENGINEER'S OFFICE
KINGS CROSS STATION, N.1.

DRAWN BY J.R.McL
TRACED BY J.O.G.
CHECKED BY
DATE 17. 7. 40.

SWD441

STANDARD WIRING DIAGRAM

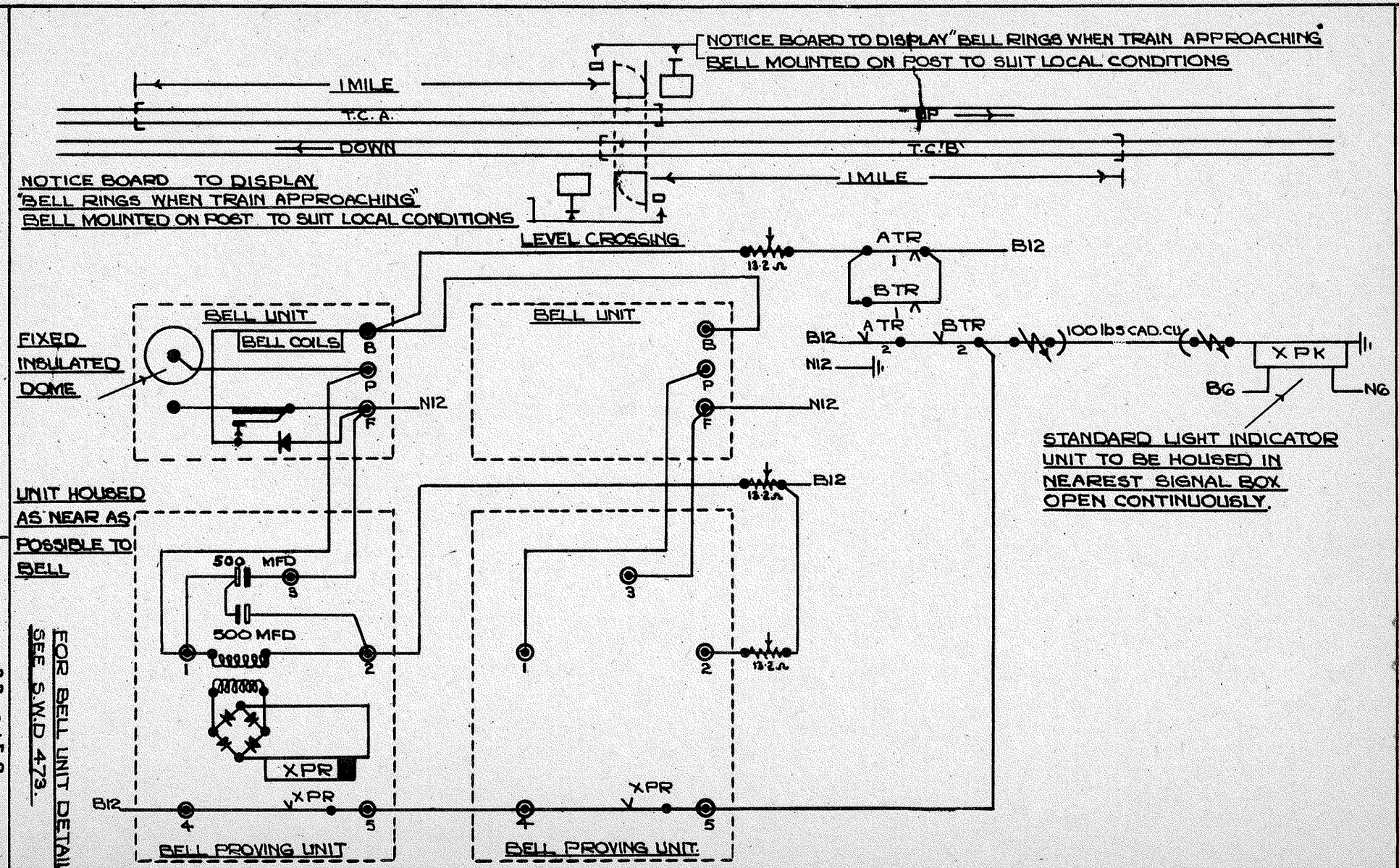

FOR BELL UNIT DETAILS SEE S.W.D 473.

LEVEL CROSSING AUDIBLE WARNING FOR USE ON DOUBLE LINES.

Copy to dn 9.8.10.7.56

B.R. ~ E.R.
SIGNAL ENGINEERS DEPT.
KINGS CROSS STATION.

DRAWN BY B.O.B.
TRACED BY
CHECKED BY
DATE: 19-8-53

SWD 451

STANDARD WIRING DIAGRAM

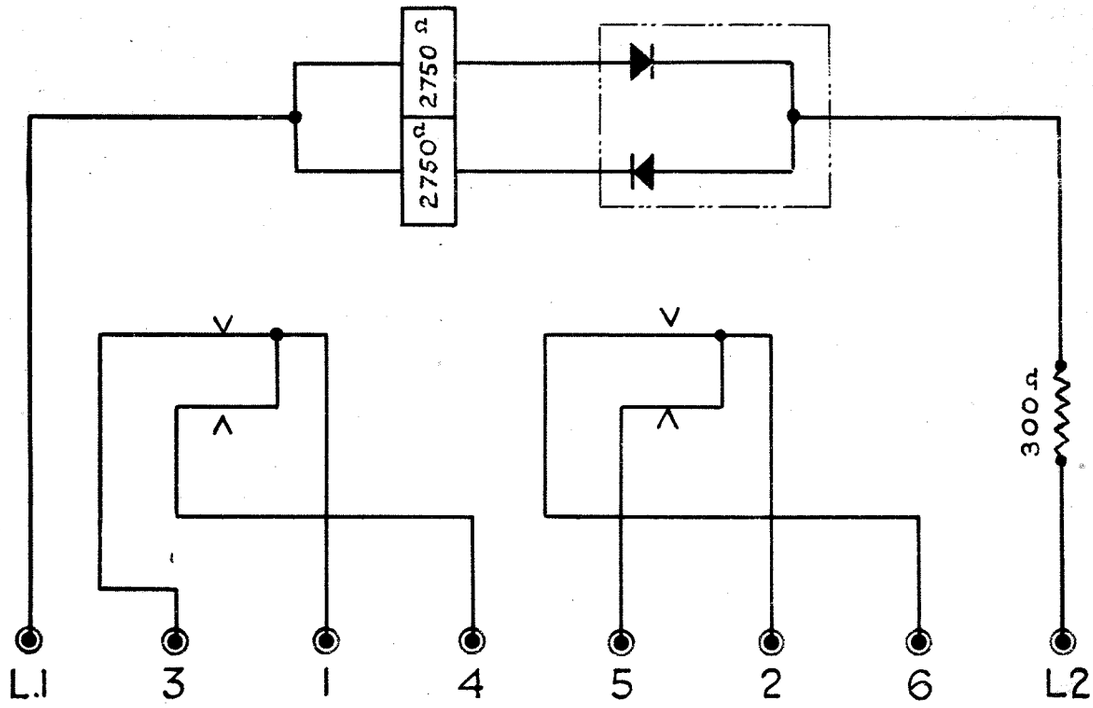

110v. TYPE

S.T.C. APPARATUS UNIT No. LA.2102/6

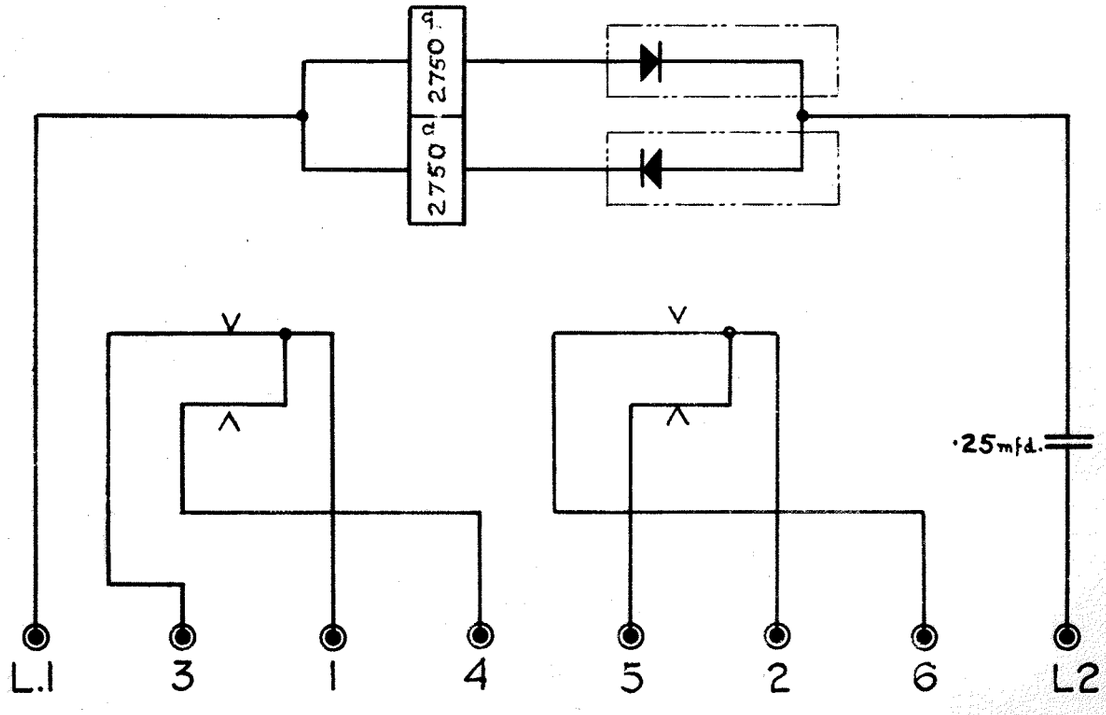

230v. TYPE

S.T.C. APPARATUS UNIT No. LA 2102/12

21	9	50	FORMERLY S.W.D. 45
6			
A			TYPE No. & RESISTANCE CHANGED. CAPACITOR PROVIDED FOR 230v. TYPE.
3 · 8 · 51			NM

"POWER OFF" RELAYS

STANDARD TELEPHONE & CABLE Co's TYPES

L.N.E.R. SOUTHERN AREA.
SIGNAL & TELEGRAPH ENGINEER'S OFFICE
KING'S CROSS STATION. N.1.

DRAWN BY S.T.&C. LTD
TRACED BY T.W.E.
CHECKED BY
DATE 14. 5. 41.

S.W.D. 461A

STANDARD WIRING DIAGRAM

A	27·3·50	ARB

THERMAL CONTACTS MADE INDEPENDENT N.M.

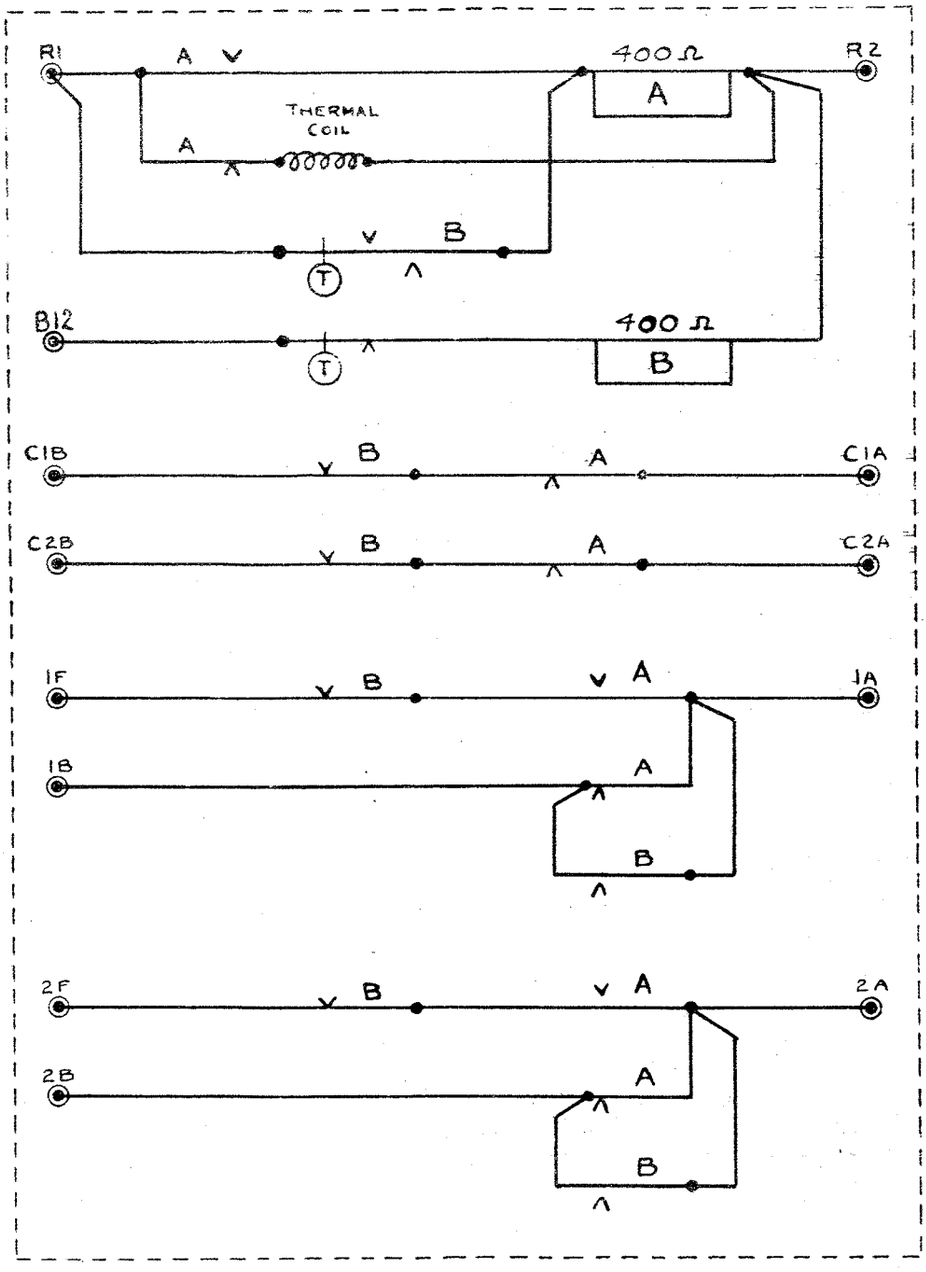

TIME RELAY

THERMAL TYPE

L.N.E.R. SOUTHERN AREA.

SIGNAL & TELEGRAPH ENGINEER'S OFFICE
KINGS CROSS STATION, N.1.

DRAWN BY J.O.G.	SWD462
TRACED BY	
CHECKED BY N.M.	DATE 8-4-49

2·9·50	FORMERLY SW0440.

STANDARD WIRING DIAGRAM

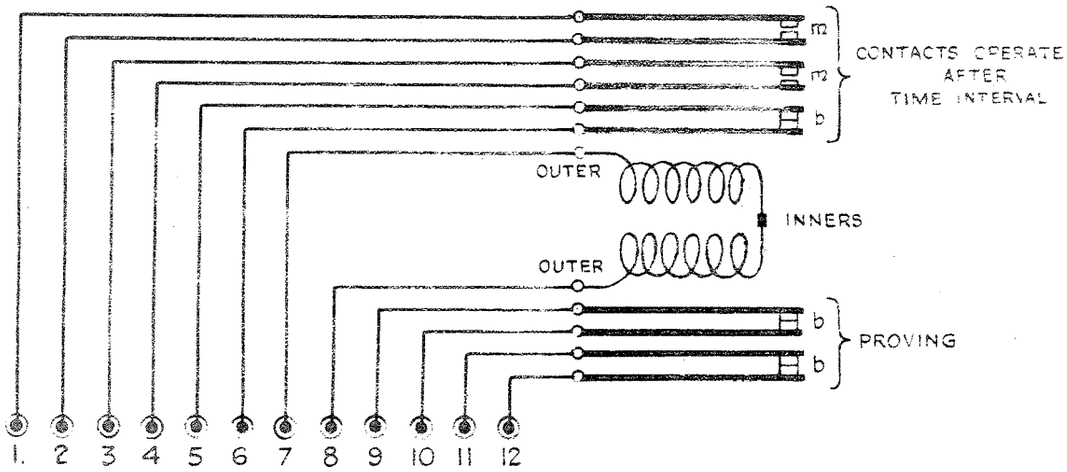

RESISTANCE OF COILS :- 10Ω + 10Ω

12v. TYPE

S.T.C. APPARATUS UNIT No. 4004A

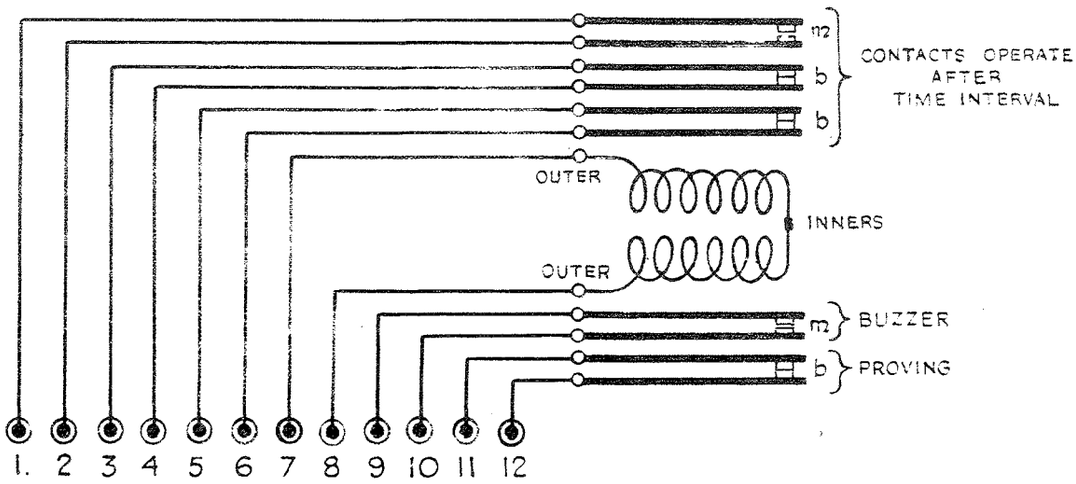

RESISTANCE OF COILS :- 150Ω + 150Ω

50v. TYPE

S.T.C. APPARATUS UNIT No. 4004B

TIME RELAYS

STANDARD TELEPHONE & CABLE Co's. TYPES

L.N.E.R. SOUTHERN AREA.

SIGNAL & TELEGRAPH ENGINEER'S OFFICE
KINGS CROSS STATION, N.1.

DRAWN BY S.T. & C LTD.	S.W.D.463
TRACED BY T.W.E.	
CHECKED BY	DATE 16. 5. 41.

21 9 50

FORMERLY S.W.D.47

STANDARD WIRING DIAGRAM

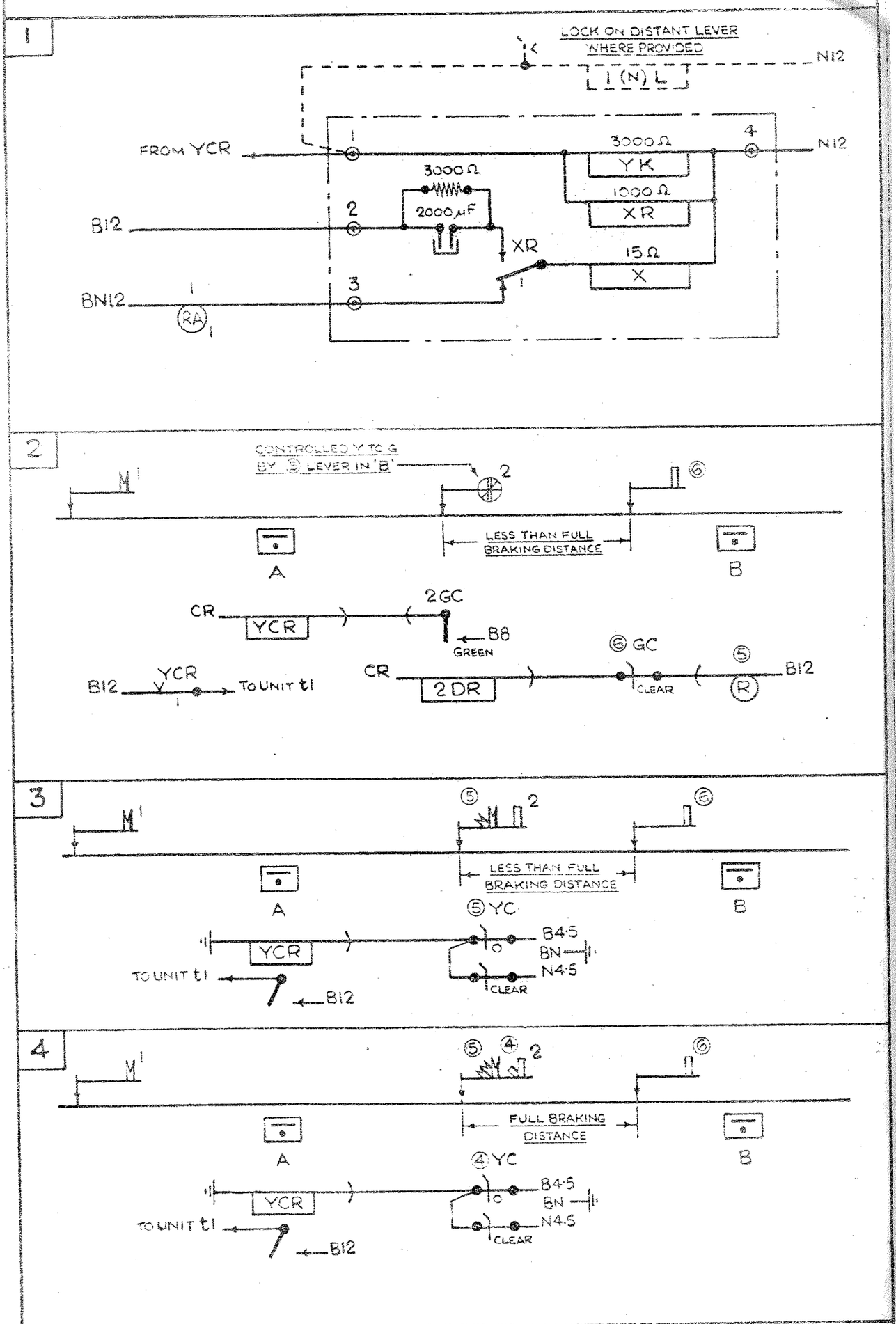

INDICATOR & AUDIBLE WARNING UNIT FOR USE WITH ELECTRICAL DISTANT INDICATOR WORKING

1. WIRING OF UNIT
2.3.4. TYPICAL APPLICATIONS

L.N.E.R. SOUTHERN AREA.
SIGNAL & TELEGRAPH ENGINEER'S OFFICE
KINGS CROSS STATION, N.1.

DRAWN BY
TRACED BY
CHECKED BY
SWD 471.
DATE 11.5.45

CORRECTED
SWD 57.

21 9 50

FORMERLY S.W.D. 59

STANDARD WIRING DIAGRAM

"TRAIN WAITING" UNIT.

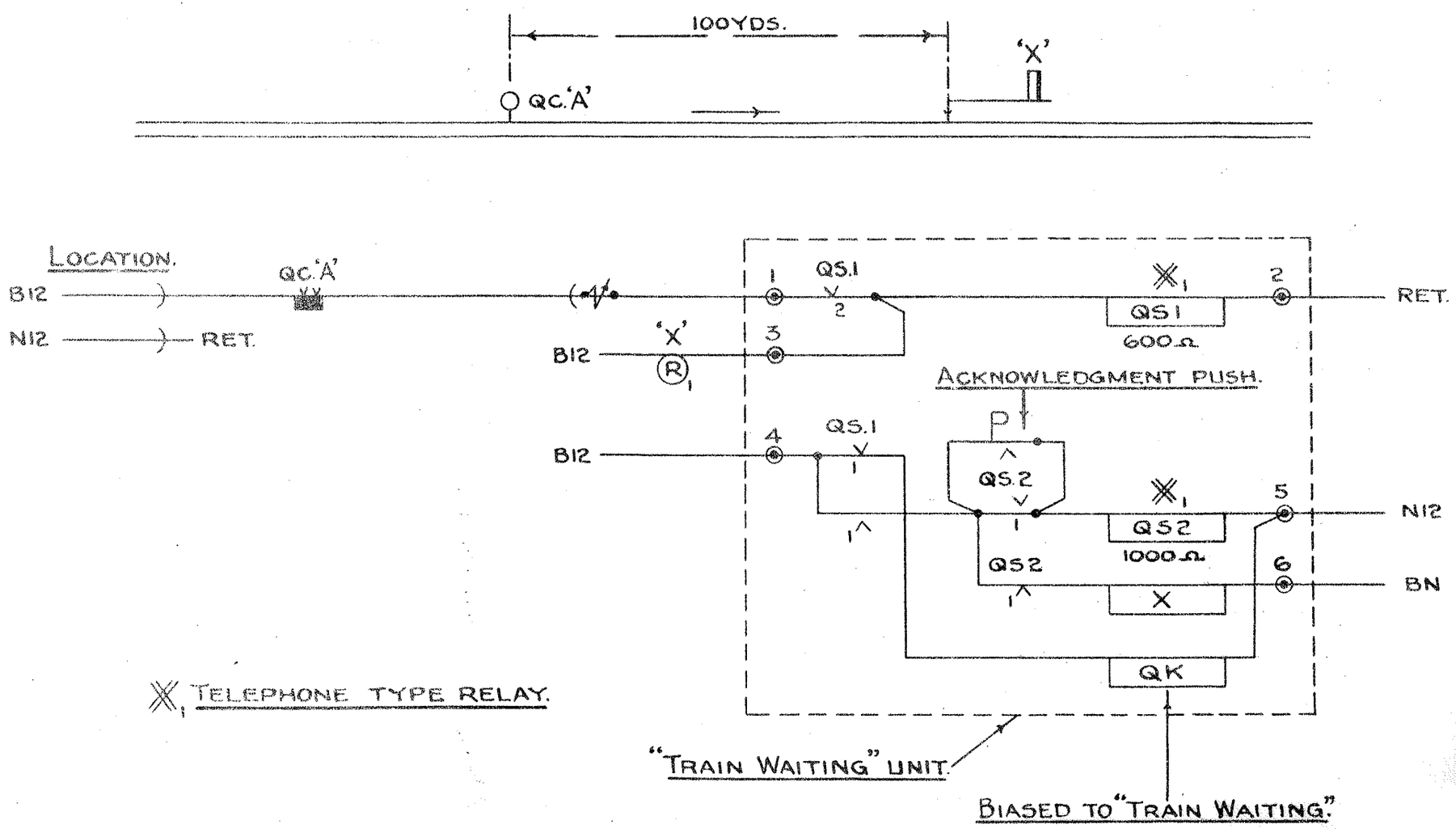

L.N.E.R. SOUTHERN AREA.
SIGNAL & TELEGRAPH ENGINEER'S OFFICE
KINGS CROSS STATION, N.1.

DRAWN BY S.W.S.
TRACED BY S.W.S.
CHECKED BY

S.W.D. 472

DATE 22-11-44

STANDARD WIRING DIAGRAM

BELL PROVING UNIT

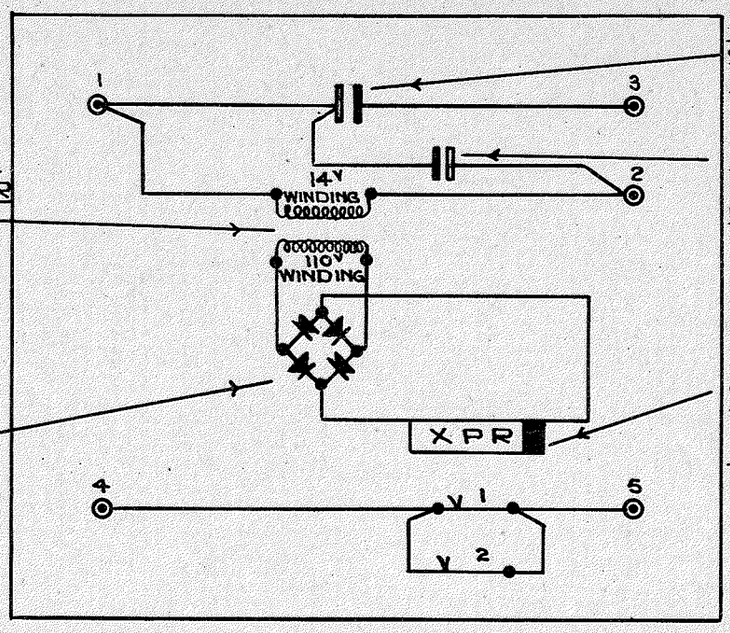

500 M.F.D CONDENSER 12V DC WORKING

500 MFD CONDENSER 12V DC WORKING

WB&S Co. SIGNAL LAMP TRANSFORMER 30 VA 2·2 AMPS 0/90/100/110 TO 0/10/12/14V SPECIFICATION 231510.

BRIDGE RECTIFIER S.T.C. CODE No B18/1/1/W 12V 0·075 AMPS

TELEPHONE TYPE RELAY 250Ω+250Ω BALANCED, 2 MAKE CONTACTS, COILS WIRED IN PARALLEL SLOW TO RELEASE

BELL PROVING UNIT TO BE MADE UP IN WOOD CASE WITH EXTERNAL TERMINALS. SIZE TO PERMIT HOUSING ON STANDARD RELAY RACK OR IN STANDARD CABINET. SIDES FRONT & TOP TO BE REMOVEABLE.

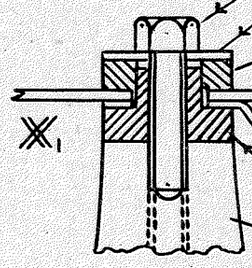

DETAIL OF DOME INSULATION.

DOME INSULATED FROM PILLAR & MADE NON-ROTATING

THIS LEAD CONNECTED BY STOUT TAG WASHER METAL TO METAL WITH DOME AS DETAIL ABOVE. TO BE CLIPPED SECURELY TO THE FRAME WORK AWAY FROM THE DOME.

THIS LEAD CHANGED

COIL

NOT INSULATED

F B P

3 TERMINALS, B & P INSULATED FROM THE FRAME.

NOTE X1 WITH SOME MAKES OF BELL IT IS POSSIBLE TO INSULATE THE BASE OF THE BELL PILLAR INSTEAD OF USING THE ARRANGEMENT SHEWN

MODIFIED LOUD SOUNDING BELL TO BE USED WITH PROVING UNIT.

BELL PROVING UNIT.

WIRING OF UNIT & MODIFICATION OF BELL TO BE USED WITH PROVING UNIT.

B.R. ~ E.R.
SIGNAL ENGINEERS DEPT.
KINGS CROSS STATION.

DRAWN BY B.O.B.	SWD 473
TRACED BY da	
CHECKED BY	DATE 19-8-53

STANDARD WIRING DIAGRAM

(4) 1. Copy sent to Inspr. G.S. + Bracman. 14.6.57.

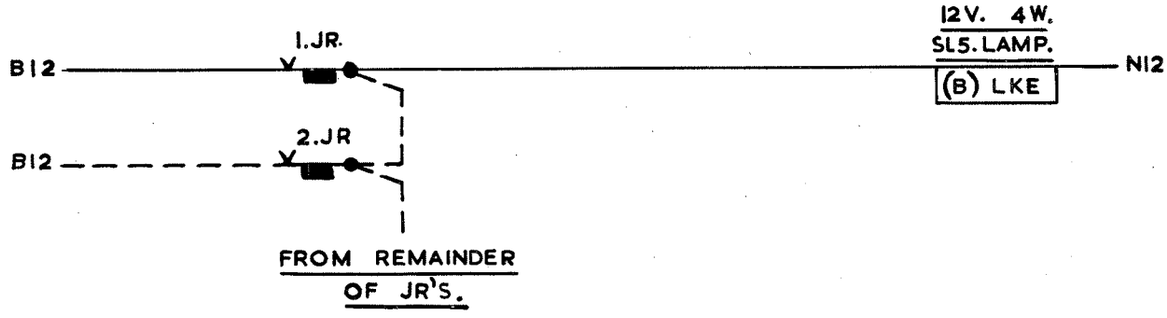

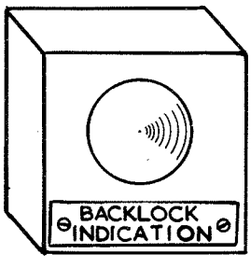

NOTES:—

1. INDICATOR TO HAVE A WHITE LIGHT, TO BE ILLUMINATED WHEN A J.R. HAS OPERATED AND EXTINGUISHED WHEN THE LEVER IS PLACED NORMAL.

2. GENERALLY A COMMON INDICATOR WILL BE PROVIDED ON THE BLOCK SHELF, BUT IN THE CASE OF A LONG FRAME ADDITIONAL INDICATORS MAY BE NECESSARY. THESE SHOULD BE LOCATED CENTRALLY BETWEEN GROUPS OF BACKLOCKED LEVERS. SEPARATE INDICATORS SHOULD BE CONTROLLED ONLY BY THE J.R'S. OF THE LEVERS WITH WHICH THEY ARE ASSOCIATED.

3. IF GROUP INDICATORS ARE PROVIDED THE LABEL SHOULD GIVE THE NUMBERS OF THE FIRST AND LAST LEVERS IN THE GROUP. E.G:— LEVERS No. 46 — 60.

BACKLOCK RELEASE INDICATOR

B.R. — E.R.
SIGNAL ENGINEERS DEPARTMENT.
KINGS CROSS STATION.

DRAWN BY. H.J.R.	SWD475.
TRACED BY. H.J.R.	
CHECKED BY. N.M.	DATE. 17—4—57.

STANDARD WIRING DIAGRAM

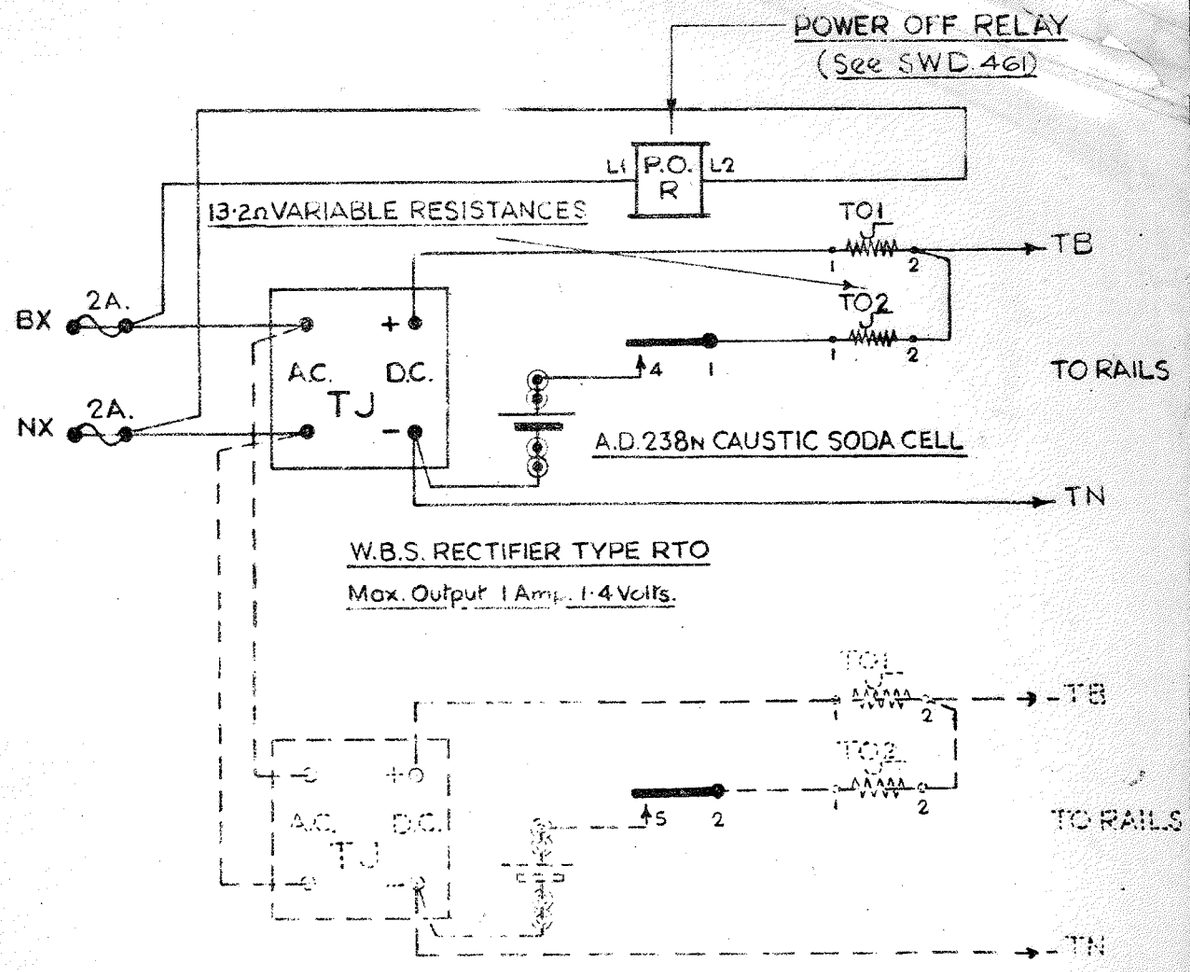

WIRING OF TRACK FEED SETS.

Where two Track Feed Sets are housed in the same Location a common Power Off Relay should be used.
Wiring of second feed shown dotted.

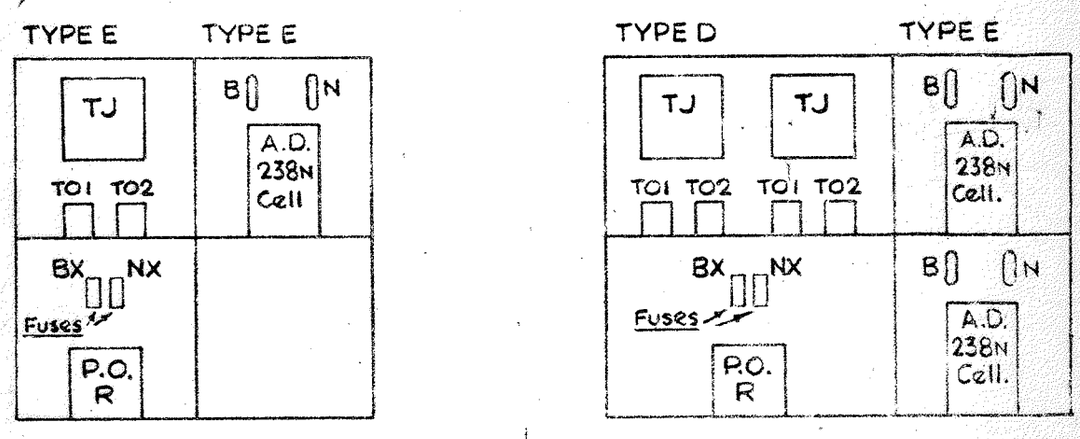

ARRANGEMENT OF APPARATUS.

RECTIFIER FED TRACK CIRCUITS.

WITH POWER OFF RELAY & PRIMARY BATTERY STANDBY.

L.N.E.R. SOUTHERN AREA.
SIGNAL & TELEGRAPH ENGINEER'S OFFICE
KINGS CROSS STATION. N.1.

DRAWN BY
TRACED BY
CHECKED BY

SWD481

DATE 2.12.42.

FORMERLY S.W.D. 66.
13·2Ω RESISTANCE INCLUDED.

STANDARD WIRING DIAGRAM.

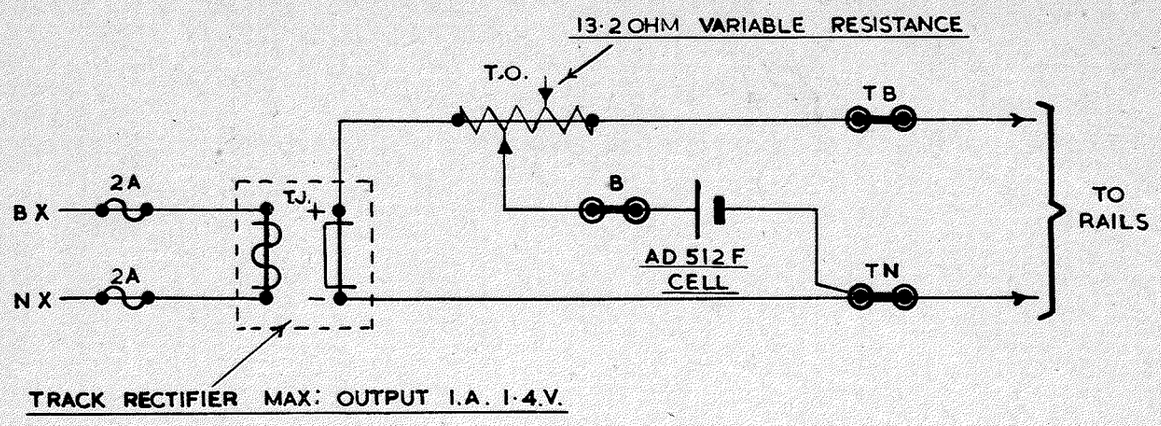

WIRING OF TRACK FEED

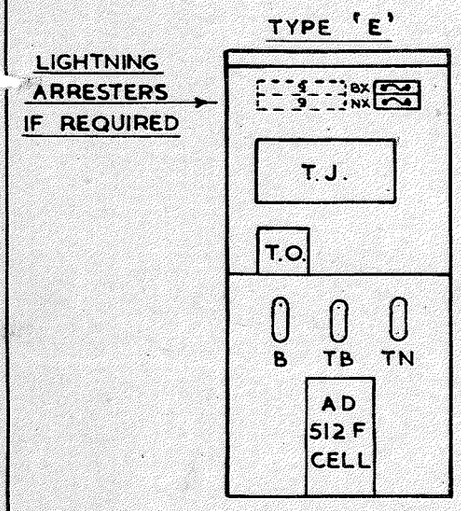

LAYOUT OF CUPBOARD

NOTES.

1. THE CORRECT TAPPING OF TRACK RESISTANCE SHOULD GIVE 1·5V. ON VOLTMETER CONNECTED ACROSS TERMINALS B AND TN WITH THE CELL DISCONNECTED.

2. REVERSE CURRENT THROUGH CELL SHOULD NOT EXCEED 50 MA.

3. CELL VOLTAGE 1—2 WEEKS AFTER INSTALLATION SHOULD BE BETWEEN 1·7V. AND 1·8V. RE-ADJUSTMENT IS NECESSARY IF VOLTAGE IS LOWER THAN 1·6V. OR HIGHER THAN 2.V.

RECTIFIER FED TRACK CIRCUITS.

FLOATING DRY CELL.

B.R. — E.R.

SIGNAL ENGRS. DEPT.
KINGS CROSS STATION.

DRAWN BY. J.R.S.	SWD482
TRACED BY. J.R.S.	
CHECKED BY. N.M.	DATE. 23·9·55

STANDARD WIRING DIAGRAM.

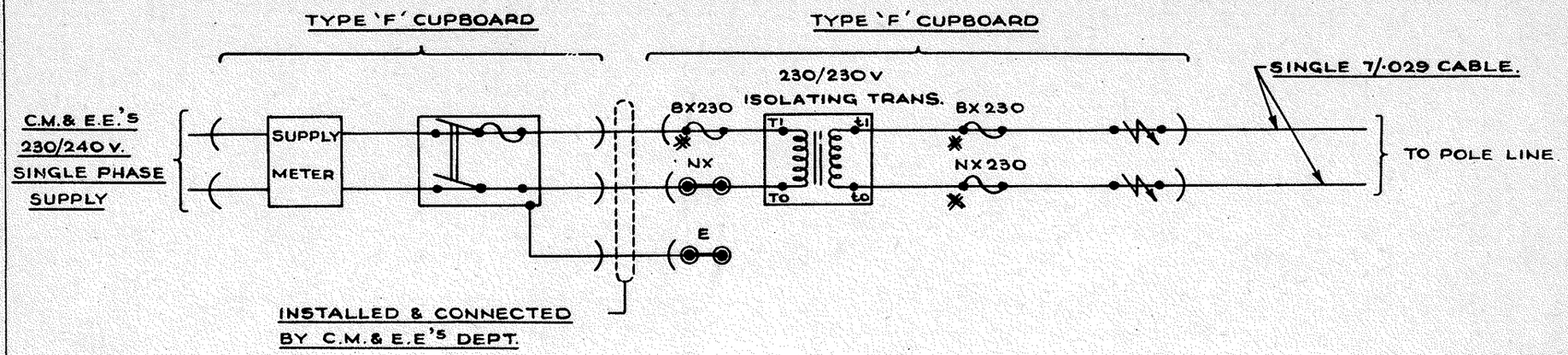

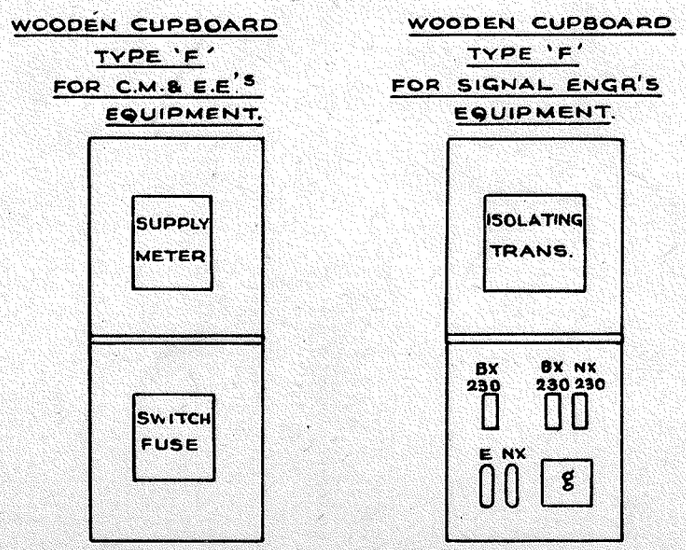

✱ :- ENCLOSED H.R.C. FUSES.

FOR NOTES SEE S.W.D. 499.

POWER SUPPLIES.

CASE 'A'

POWER SUPPLY AT LINESIDE LOCATION.

B.R. - E.R.
SIGNAL ENGINEER'S DEPT.
FINSBURY SQUARE. E.C.2.

DRAWN BY: R.S.T.
TRACED BY: E.C.
CHECKED BY: A.G.B.

S.W.D.495

DATE: 17. 11. 58.

STANDARD WIRING DIAGRAM.

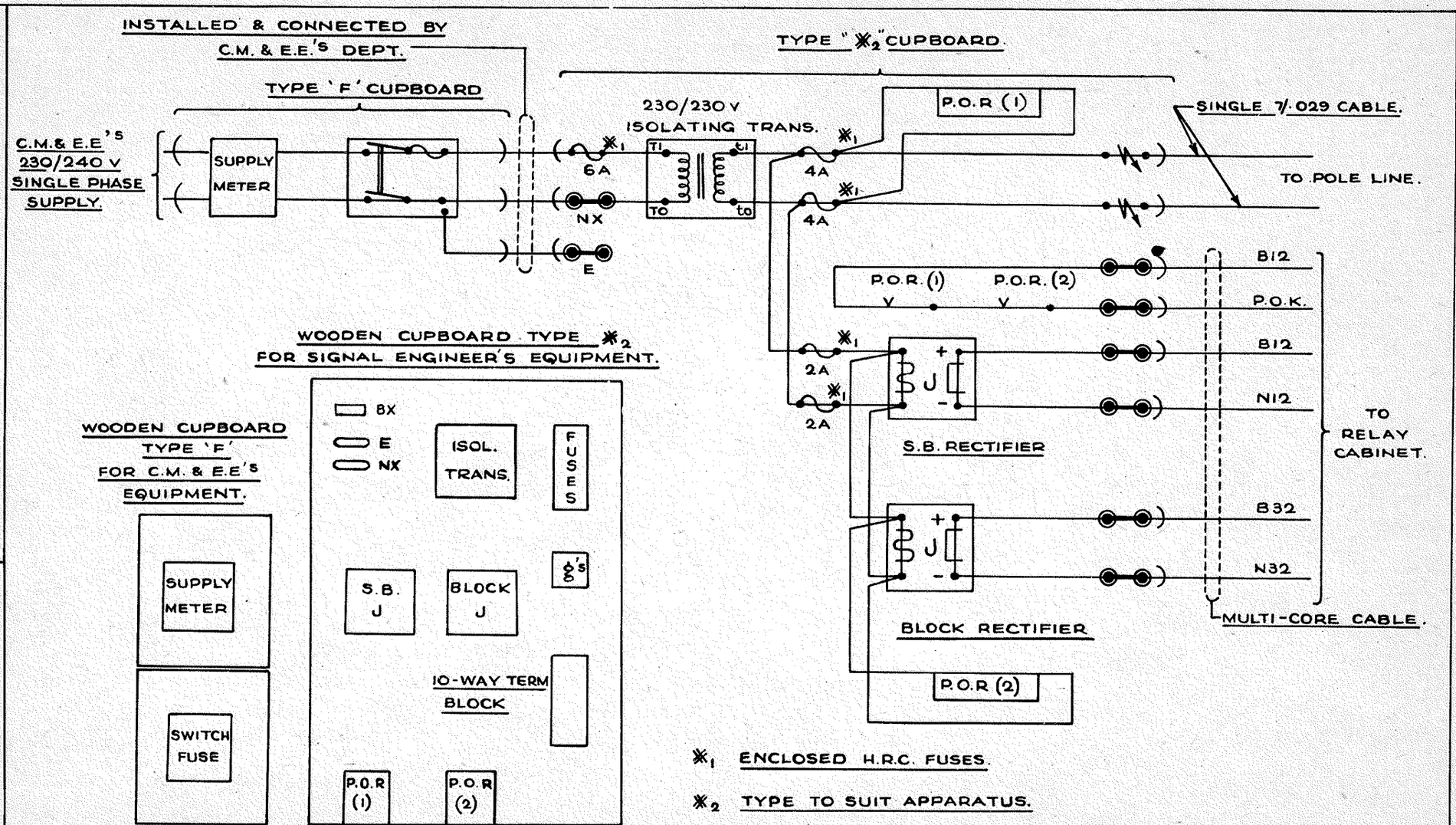

POWER SUPPLIES.

CASE 'B'

POWER SUPPLY AT S.B.
WITH ISOLATING TRANSFORMER.

B.R.-E.R.
SIGNAL ENGINEER'S DEPT.
FINSBURY SQUARE. E.C.2

DRAWN BY: R.S.T.
TRACED BY: E.C.
CHECKED BY: A.G.B.
DATE: 17. 11. 58.

S.W.D.496

STANDARD WIRING DIAGRAM.

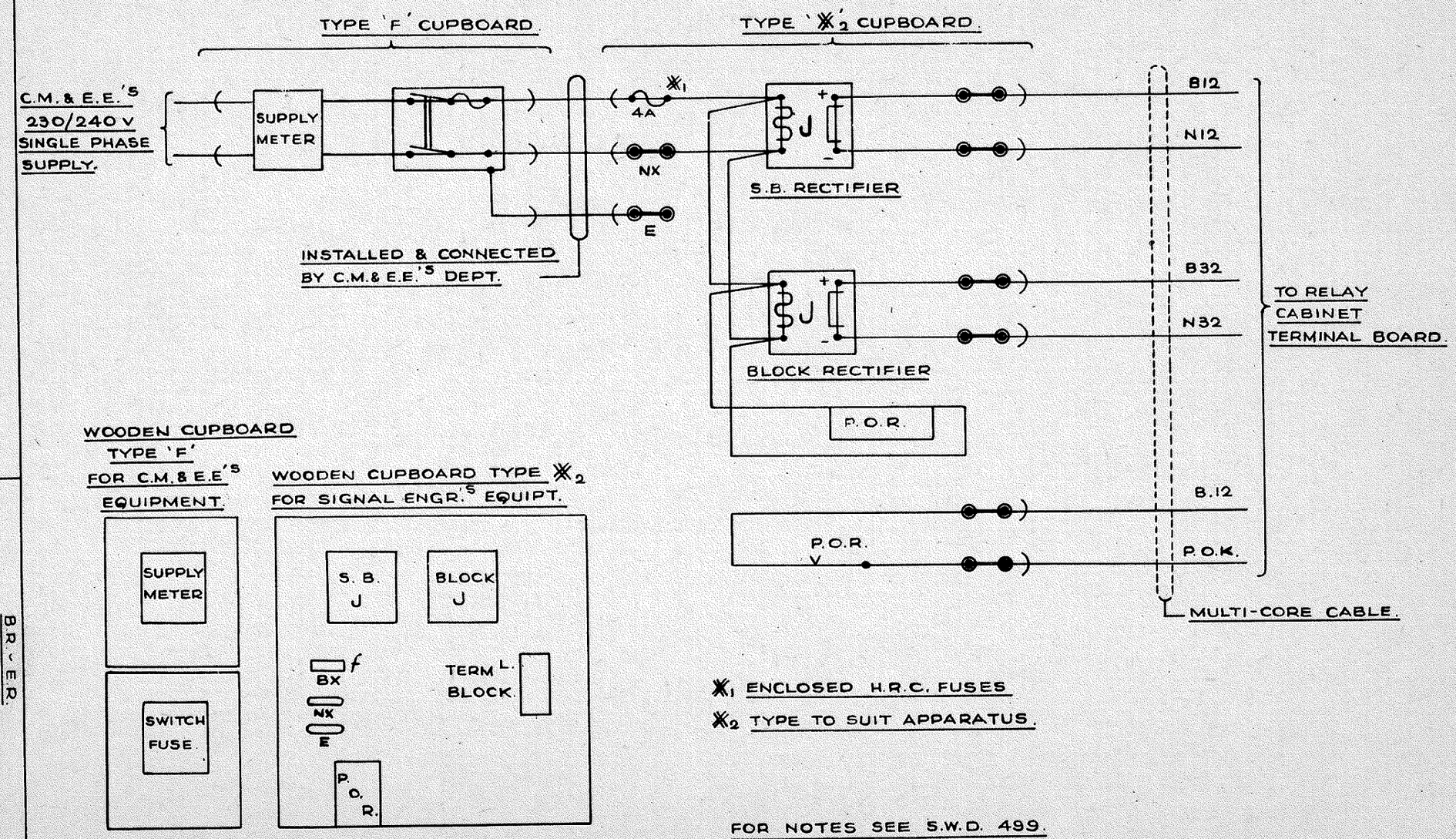

※1 ENCLOSED H.R.C. FUSES

※2 TYPE TO SUIT APPARATUS.

FOR NOTES SEE S.W.D. 499.

POWER SUPPLIES.

CASE "C".

POWER SUPPLY AT SIGNAL BOX WITHOUT ISOLATING TRANSFORMER.

B.R. ~ E.R.
SIGNAL ENGINEER'S DEPT.
FINSBURY SQUARE. E.C.2.

DRAWN BY: R.S.T.
TRACED BY: E.C.
CHECKED BY: A.G.B.

SWD497

DATE: 17. 11. 58.

STANDARD WIRING DIAGRAM.

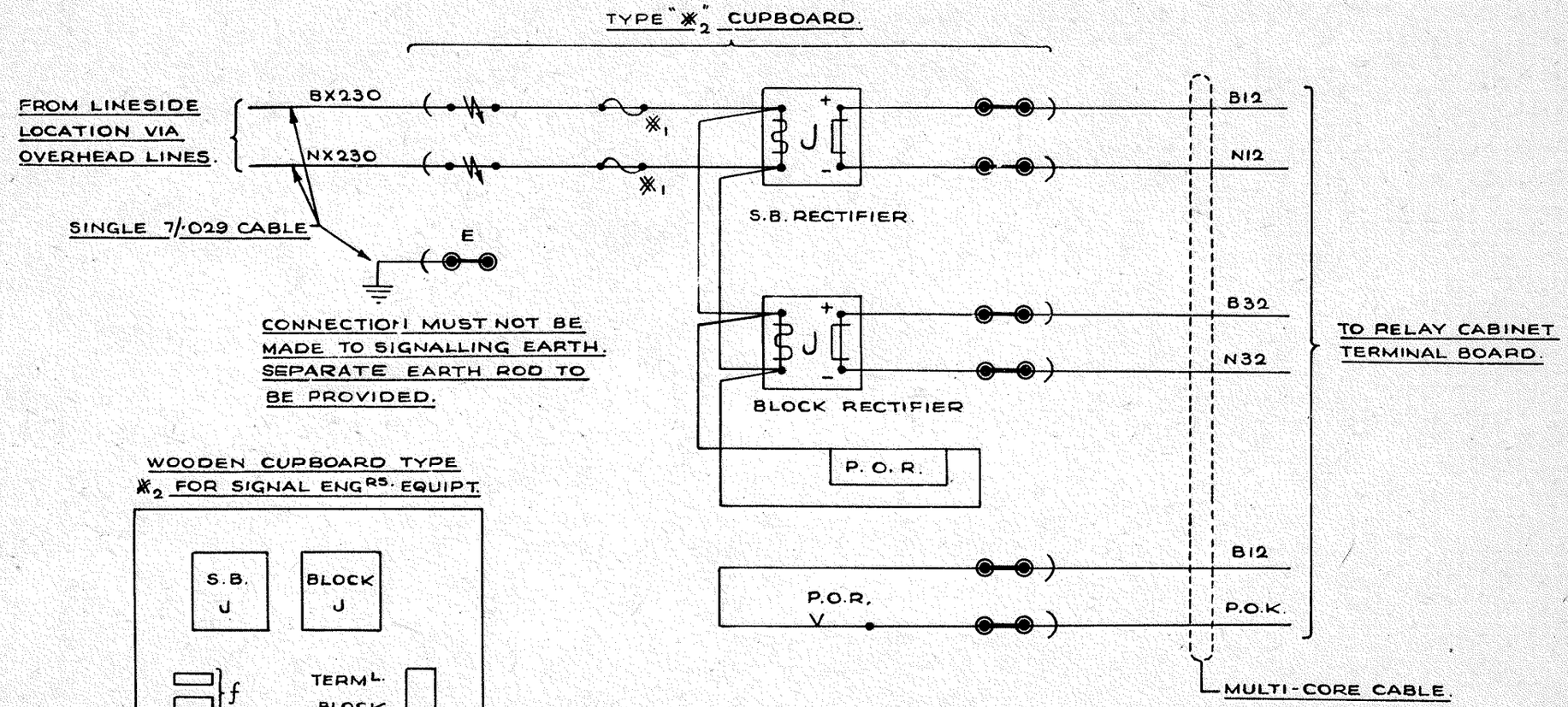

WOODEN CUPBOARD TYPE ※2 FOR SIGNAL ENGRS. EQUIPT.

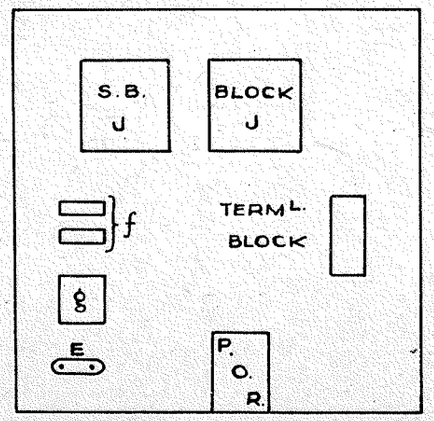

※1 ENCLOSED H.R.C. FUSES.

※2 TYPE TO SUIT APPARATUS.

FOR NOTES SEE S.W.D. 499

POWER SUPPLIES.

CASE "D"

SIGNAL BOX SUPPLY TAKEN FROM SIGNALLING MAINS ON POLE LINE.

B.R.-E.R.

SIGNAL ENGINEER'S DEPT. FINSBURY SQUARE. E.C.2.

DRAWN BY: R.S.T.

TRACED BY: E.C.

CHECKED BY: A.G.B.

DATE: 17.11.58.

S.W.D.498

STANDARD WIRING DIAGRAM.

NOTES:-

1. WIRING OF SIGNAL ENGINEER'S CUPBOARD TO BE CARRIED OUT IN 7/·029 SINGLE CORE FLAMEPROOF CABLE.

2. ALL TERMINALS ON ISOLATING TRANSFORMER, RECTIFIER INPUT TERMINALS, AND P.O.R. CONTROL TERMINALS TO BE FITTED WITH PROTECTIVE SLEEVES AND INSULATED NUTS.

3. METAL CASING OF TRANSFORMERS AND RECTIFIERS TO BE EARTHED TO THE C.M.& E.E.'S EARTH CONNECTION.

4. LIGHTNING ARRESTERS, WHICH MUST BE OF THE GAS DISCHARGE TYPE TO BE EARTHED ON TO THE SIGNALLING EARTH AND MUST BE FITTED WITH OVERALL PROTECTIVE COVERS AND INSULATED NUTS.

5. FUSE VALUES SHEWN IN CASE 'B' ARE TO ILLUSTRATE GRADING PRINCIPLE, BUT IN PRACTICE WILL BE DETERMINED BY THE ACTUAL LOAD.

POWER SUPPLIES.

NOTES APPLICABLE TO S.W.D'S 495 TO 498.

B.R. - E.R.
SIGNAL ENGINEER'S DEPT.
FINSBURY SQUARE E.C.2.

DRAWN BY: R.S.T.	S.W.D.499
TRACED BY: E.C.	
CHECKED BY: A.G.B.	DATE: 17. 11. 58