R.S. TWINING

Ex E.R. STANDARD

WIRING DIAGRAMS

SDEC

DRAWN BY	A.D.P.	THE RAILWAY EXECUTIVE — EASTERN REGION	PLAN No	48.LS.148
CHECKED BY		CONTROL OF MID-SECTION GROUND FRAME	DATE	1.9.48
		ALL TRAINS SHUT IN	COR. REF.	

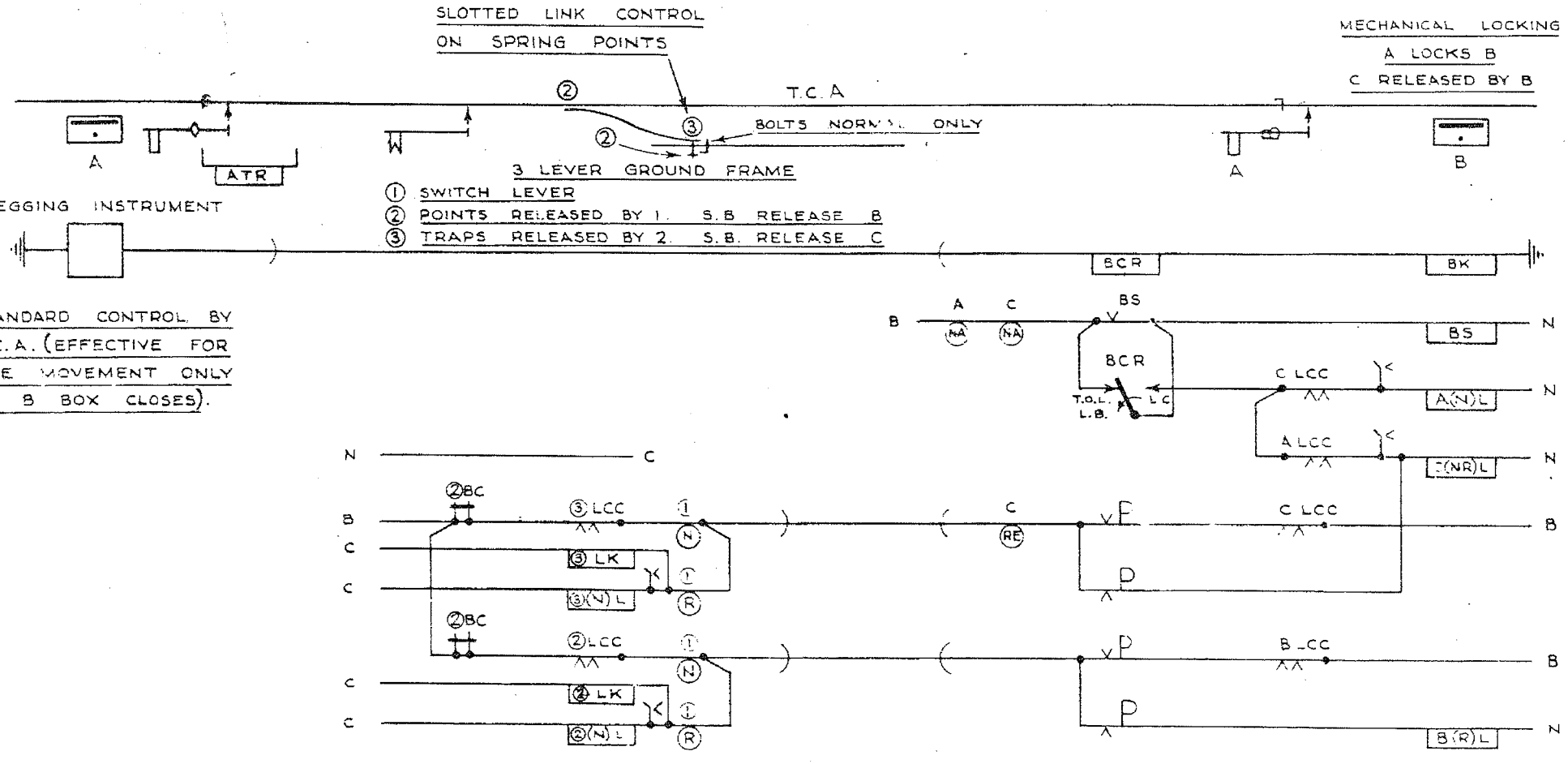

DRAWN BY	A.D.P.	THE RAILWAY EXECUTIVE — EASTERN REGION CONTROL OF MID-SECTION GROUND FRAME FOR PICK-UP OR SHUT IN MOVEMENTS	PLAN No	48.LS.147.
CHECKED BY			DATE	1.9.48.
			COR. REF.	

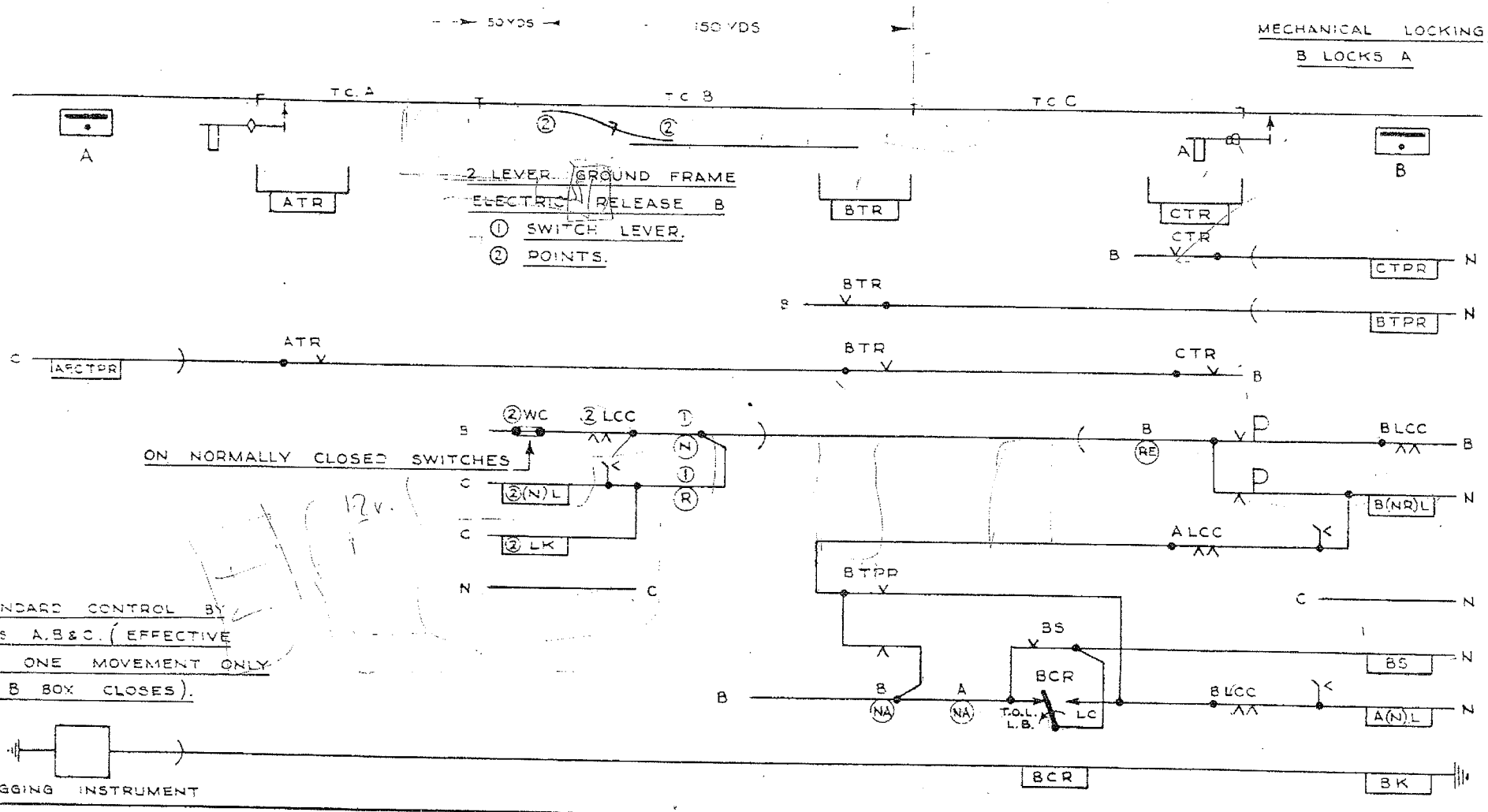

Modalarm Type Y03 24V DC.

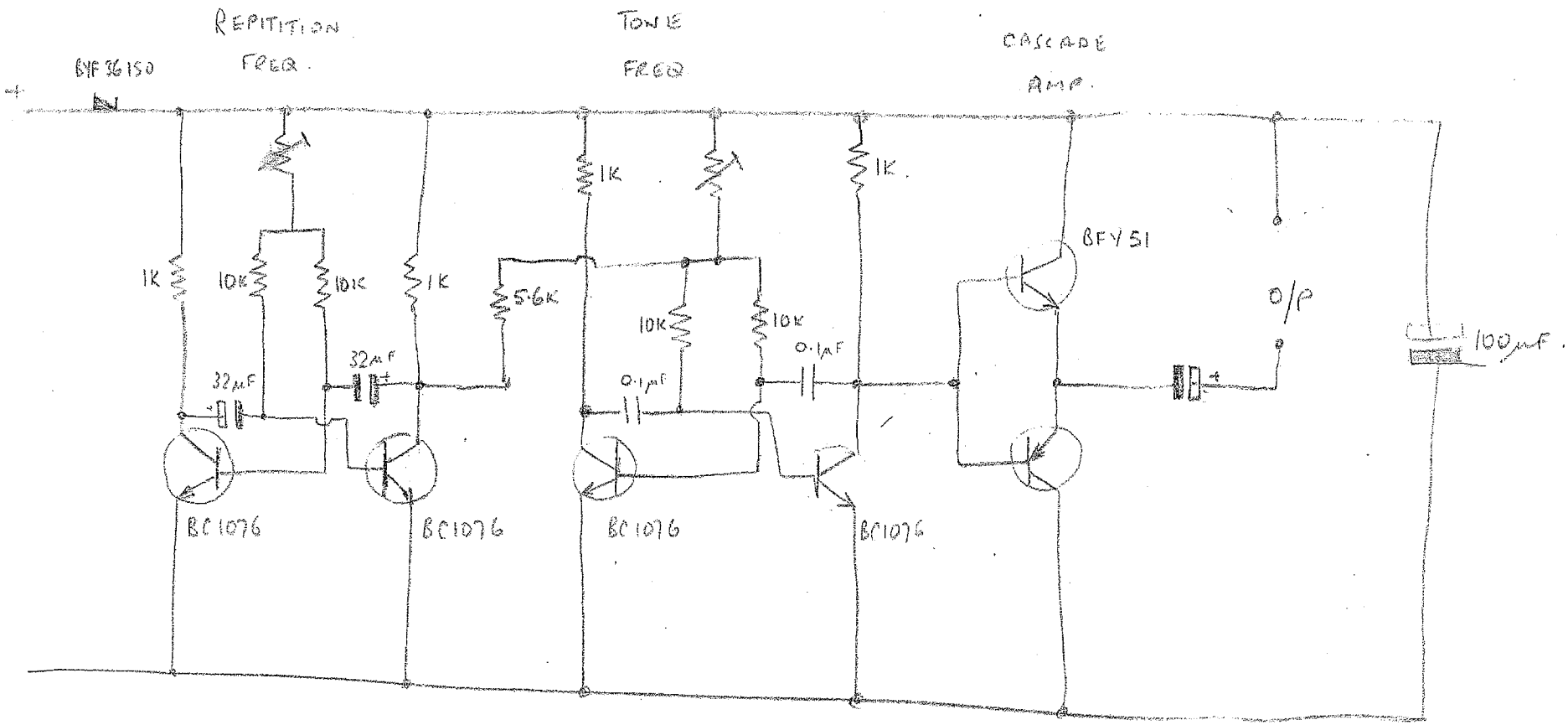

NPN PNP

Specify temp. range. $-20^\circ \pm 15^\circ C$.

100% inspection - joints & wiring

Change variable pots for fixed resistance

Soak test.

Dual units.

Voltage variation will cause freq. variation

~~Use~~ Varnish board & units.

Encapsulation will not help heat dissipation.

Not safety and failure.

Good workmanship

[illegible]

[illegible]

S/2/1

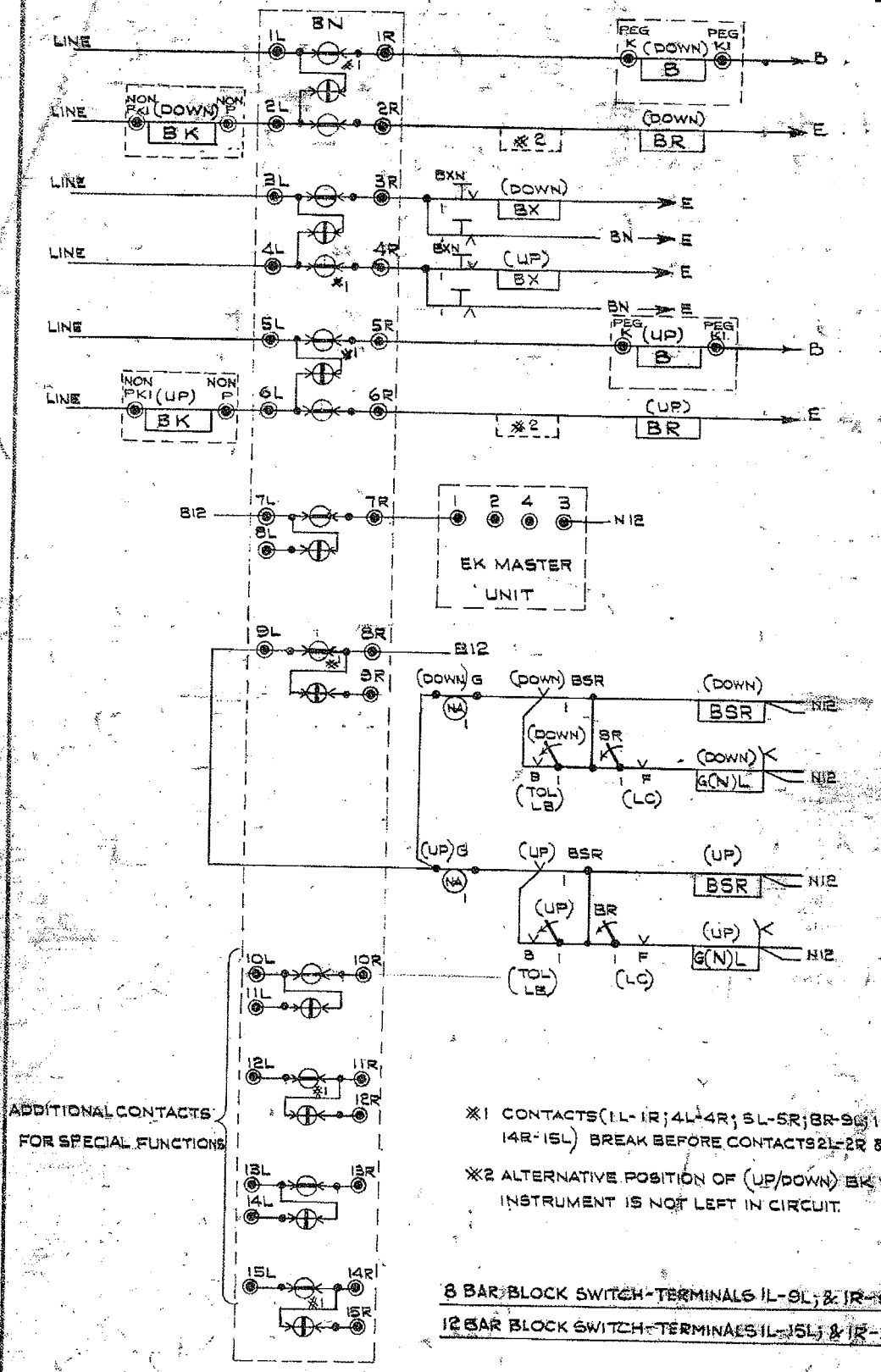

※1 CONTACTS (1L-1R; 4L-4R; 5L-5R; 8R-9R; 11R-12L & 14R-15L) BREAK BEFORE CONTACTS 2L-2R & 6L-6R.

※2 ALTERNATIVE POSITION OF (UP/DOWN) BK WHERE INSTRUMENT IS NOT LEFT IN CIRCUIT.

8 BAR BLOCK SWITCH-TERMINALS 1L-9L; & 1R-9R

12 BAR BLOCK SWITCH-TERMINALS 1L-15L; & 1R-15R

DRAWN BY	N.H.E. P.A.H.	CORR. REF	ST. 4250
CHECKED BY	W.H.E.	AUTHORITY	
		DATE	25 : 1 : 58

A. F. Wigram

SIGNAL ENGINEER

BRITISH RAILWAYS — N.E. REGION

STANDARD 8 OR 12 BAR (UNIVERSAL) BLOCK SWITCH ARRANGEMENT & WIRING DETAILS

58-YS-20

224/32

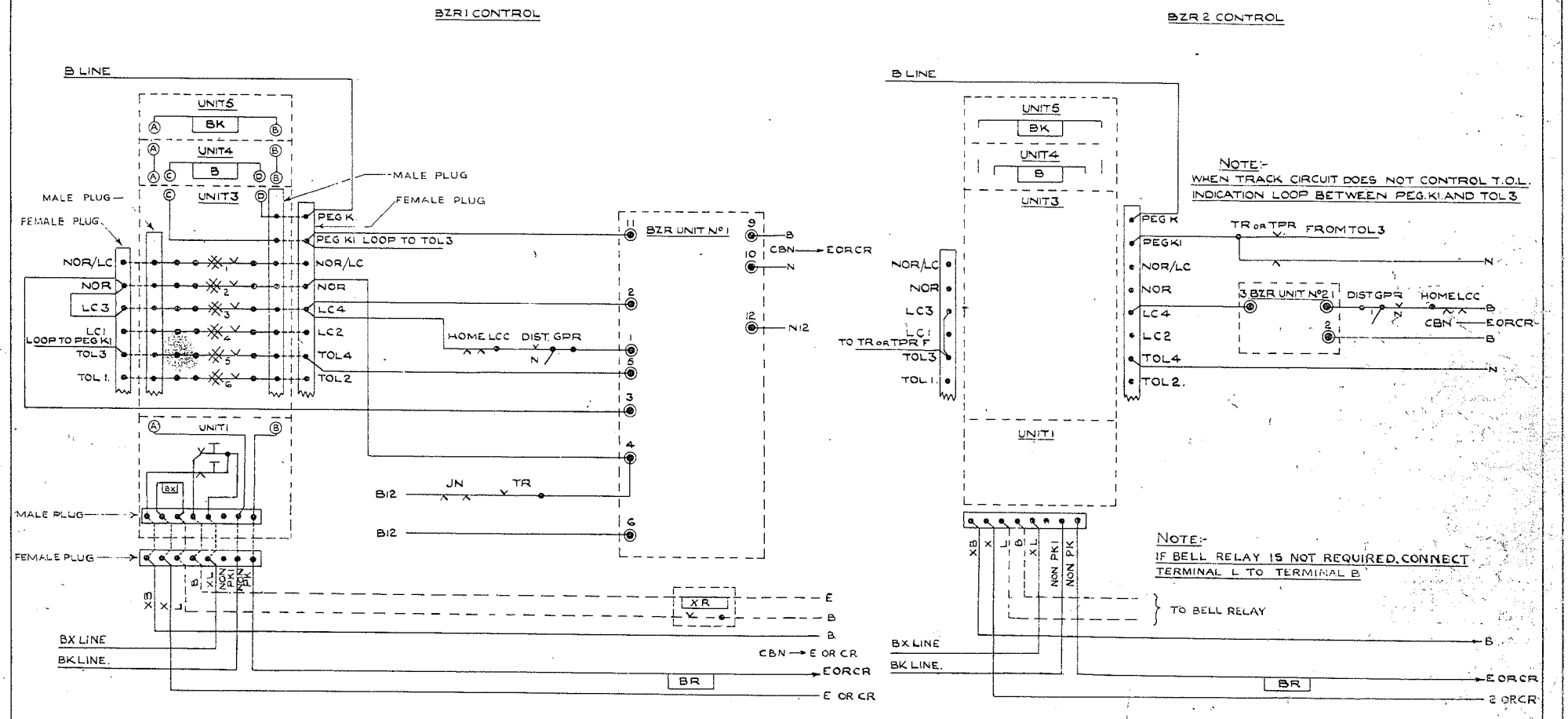

NOTE:- BLOCK SWITCH CONTACTS OMITTED

※1 COMMUTATOR CONTACTS MADE IN "LB" AND "LC" POSITIONS.
※2 " " " "LB" POSITION.
※3 " " " "LC" "
※4 " " " "LC" "
※5 " " " "TOL" "
※6 " " " "TOL" "

AMENDMENT		
DRAWN BY	B.L.W.	TERMINAL BLOCKS MOUNTED IN INSTRUMENT SHELF DISPENSED WITH
CHECKED BY	A.R.D.	
DATE	4·1·62	
A.F. WIGRAM		
CHIEF S & T ENGINEER		

DRAWN BY	J.K.H. A.M.	CORR. REF.	ST 1657
CHECKED BY		AUTHORITY	
		DATE	3·10·58

A.F. Wigram

SIGNAL ENGINEER

BRITISH RAILWAYS N.E. REGION.

STANDARD ABSOLUTE BLOCK INSTRUMENT (COMBINED DOUBLE DIAL AND BELL) EXTERNAL WIRING OF TERMINALS

58-YS-196

1st December, 1959.

STANDARD WIRING DIAGRAM INDEX.

S.W.D.	Description.
300B	3-Position S.N. Block. Track Circuit Control with Acceptance Effective for One Movement only.
301A	3-Position S.N. Block. Double Dial Instrument. Internal Wiring.
302	3-Position S.N. Block. Signal Proving Control.
303	3-Position S.N. Block. Without Proving. (In preparation).
304	
305	
306	
307	
308	
309	
310	
311B	3-Wire, 3-Position Single Needle Block. Wiring of Pegger Instruments.
312B	3-Wire, 3-Position Single Needle Block. Wiring of Pegger Instruments.
313B	Control of Starting signal by Block Instrument Pegged to "Line Clear". Release effective for One Movement only.
314	L.C. Release Circuit when box is switched out and Starting signals replaced for operation of Level Crossing Gates. (Arrangement when Lock on Block Switch does not exist).
315	L.C. Release Circuit when box is switched out and Starting signals replaced for operation of Level Crossing Gates. (Arrangement when Lock on Block Switch exists).
316	
317	
318	
319	
320	
321A	Tyer's One-Wire, Two-Position Block Instrument.
322A	Tyer's One-Wire, Two-Position Block Instrument.
323	
324	
325	Tyer's One-Wire, Two-Position, Single Line, Block Instrument.
326	Tyer's One-Wire, Two-Position Single Line Block Instrument. Track Circuit control and signal proving effective for One Movement only.
327	Control of Starting Signal by Block and Train Staff. Release effective for One Movement only.

Continued.....

S.W.D.	Description.
328	
329	
330	
331	
332	
333	
334	
335	
336	
337	
338	
339	
340	
341B	Tyer's Key Token Instrument. Original Form.
342A	Tyer's Key Token Instrument. With Signal Proving and Starting Signal release equipment.
343	Tyer's Key Token Instrument Type 12A II. With Signal Proving and Starting Signal Release.
344	
345A	Tyer's Intermediate Key Token Instrument.
346	Key Token Plunging Unit. Internal Wiring.
347	
348	
349	
350	
351	
352	
353	
354	
355	
356	
357	
358	
359	
360A	L.N.E.R. Southern Area. Elec. Train Staff Instruments. Wiring of Webb & Thompson Large Type Subsidiary Instrument.

Continued.....

S.W.D.	Description.
361	
362	
363	
364	
365	
366	
367	
368	
369	
370	
371	Low Voltage Point Machine. Double End Detection. Left Hand Switch closed. Machine Type S.G.E. HB.741.
372	Low Voltage Point Machine. Double End Detection. Right Hand Switch closed. Machine Type S.G.E. HB.741.
373	Low Voltage Point Machine. Single End Detection. Left Hand Switch closed. Machine Type S.G.E. HB.741.
374	Low Voltage Point Machine. Single End Detection. Right Hand Switch closed. Machine Type S.G.E. HB.741.
375	Low Voltage Point Machine. Double End Detection. Facing Crossover Right Hand Switch closed. Machine Type S.G.E. HB.741.
376	Low Voltage Point Machine. Internal Wiring. Machine Type S.G.E. HB.741.
377A	Low Voltage Point Machine. Note references applicable to Drawings Nos. S.W.D. 371-5, 379, 380-2.
378	Low Voltage Point Machine. Common Battery when power supply available.
379	Low Voltage Point Machine. Double End Detection. Left Hand Switch closed. Machine Type S.G.E. HB.541/2.
380	Low Voltage Point Machine. Double End Detection. Right Hand Switch closed. Machine Type S.G.E. HB.541/2.
381	Low Voltage Point Machine. Single End Detection. Left Hand Switch closed. Machine Type S.G.E. HB.541/2.
382	Low Voltage Point Machine. Single End Detection. Right Hand Switch closed. Machine Type S.G.E. HB.541/2.
383	Low Voltage Point Machine. Double End Detection. Facing Crossover Right Hand Switch closed. Machine Type S.G.E. HB.541/2. (In preparation).
384	
385	Standard Wiring of 110 Volt Separate Type Point Machine operated by Hand Generator. W.B.S. Style C Machine.
386	Standard Wiring of 110 Volt Separate Type Point Machine operated by Hand Generator. W.B.S. Style C Machine.
387	
388	

Continued.....

S.W.D.	Description.
389	
390A	Internal Wiring of 110 Volt d.c. Combined Type Point Machine. S.G.E. Type HB.951.
391	
392	
393	
394	
395B	Electrical Detection of Mechanical Points. S.G.E. Type HH.101 Detector. (Old Standard).
396	Electrical Detection of Mechanical Points. (New Standard).
397	
398	
399	
400	
401A	Signal Repeater Circuits. 1. Arm only. 2. Arm and Light. 3. Arm and Balance Lever (Controlled Signal).
402A	Signal Repeater Circuits. 1. Arms only, for two diverging lines. 2. Arms only, for three diverging lines. 3. Arms only, for two co-acting. 4. Arms and Slots, for two converging lines. 5. Arms and Slots, for two diverging lines.
403	Signal Repeater Circuits. 1. Light only. 2. Light Indicator Unit (Internal Wiring).
404	
405	
406	
407	
408	Fogsignalmen's Electrical Repeater Circuit.
409	
410	
411	G.R.S. Type S.A. Searchlight Signal. With two sets of Proving Contacts. Internal Connections.
412	Colour Light Signals. Operated by Mechanical Wire. Searchlight type.
413	Colour Light Signals. Operated by Mechanical Wire. "Adlake" type.
414	Colour Light Signals. Electrically Operated 2-Aspect Distant. Searchlight.
415	Colour Light Signals. Operated by Mechanical Wire. Multi-Unit type.
416A	2-Aspect Colour Light Distant Signal. Control Circuits.

Continued.....

S.W.D.	Description.
417	
418	
419	
420	Intermediate Block Signal. "Train Running Away" Indication. Separate Overlap Track not provided.
421	Intermediate Block Signal. "Train Running Away" Indication. Separate Overlap Track provided.
422	Intermediate Block Signal. "Train Past" Audible Indication Circuit.
423	c/L signals m/a type with lamp proving 2 aspect
424	" " " " " " " " with approach control.
425	" " " " " " " 3 " controlled from 2 s.b. "
426	" " " " " " " " shunts / dwarf.
427	"
428	c/L " s/L " " " " 4 "
429	" " with lamp proving power supply arrangements
430	Stencil Type Route Indicator (Double Sided). One Lever with Mechanical Detection used for each route.
431	Stencil Type Route Indicator. For use with Mechanical Signals and using Electrical Detection.
432	Stencil Type Route Indicator. For use with Main and Subsidiary Signals using Mechanical Detection and Separate route levers.
433	Stencil Type Route Indicator for use with converging signals. Route Indication selected by Route Levers with Mechanical Detection. (Wire Operated).
434	
435	
436	
437	
438	
439	2-Arm Junction Indicator fed from Trickle Charged Battery. Control Circuit.
440	2-Arm Junction Indicator fed from Trickle Charged Battery. Lighting Circuit.
441	Standard Ground Frame Control Circuits.
442	
443	
444	
445	
446	

Continued.....

S.W.D.	Description.
447	
448	
449	
450	
451	Level Crossing Audible Warning for use on Double Lines.
452	Level Crossing Audible Warning for use on Single Lines. (In preparation).
453	
454	
455	
456	
457	
458	
459	
460	
461A	"Power Off" Relays. Standard Telephone and Cable Co's. Types.
462	Time Relay. Thermal Type.
463	Time Relays. Standard Telephone and Cable Co's. Types.
464	Time Relay. Thermal Type. One operated and Two Proving Contacts.
465	
466	
467	
468	
469	
470	
471	Indicator and Audible Warning Unit for use with Electrical Distant Indicator Working. 1. Wiring of Unit. 2, 3, 4. Typical Applications.
472	"Train Waiting" Unit.
473	Bell Proving Unit. Wiring of Unit and Modification of Bell to be used with Proving Unit.
474	
475	Racklock Release Indicator.
476	
477	
478	

Continued.....

S.W.D.	Description.
479	
480	
481A	Rectifier Fed Track Circuits. With Power Off Relay and Primary Battery Standby.
482	Rectifier Fed Track Circuits. Floating Dry Cell.
483	
484	
485	
486	
487	
488	
489	
490	Route Checking Plunger Units. (Internal Wiring).
491	
492	
493	
494	
495	Power Supplies. Case 'A'. Power Supply at Lineside Location.
496	Power Supplies. Case 'B'. Power Supply at S.B. with Isolating Transformer.
497	Power Supplies. Case 'C'. Power Supply at S.B. without Isolating Transformer.
498	Power Supplies. Case 'D'. Signal Box Supply Taken from Signalling Mains on Pole Line.
499	Power Supplies. Notes Applicable to S.W.D's. 495-498.

STANDARD SIGNALLING PRINCIPLES.

NOMENCLATURE OF STOP AND DISTANT SIGNALS.

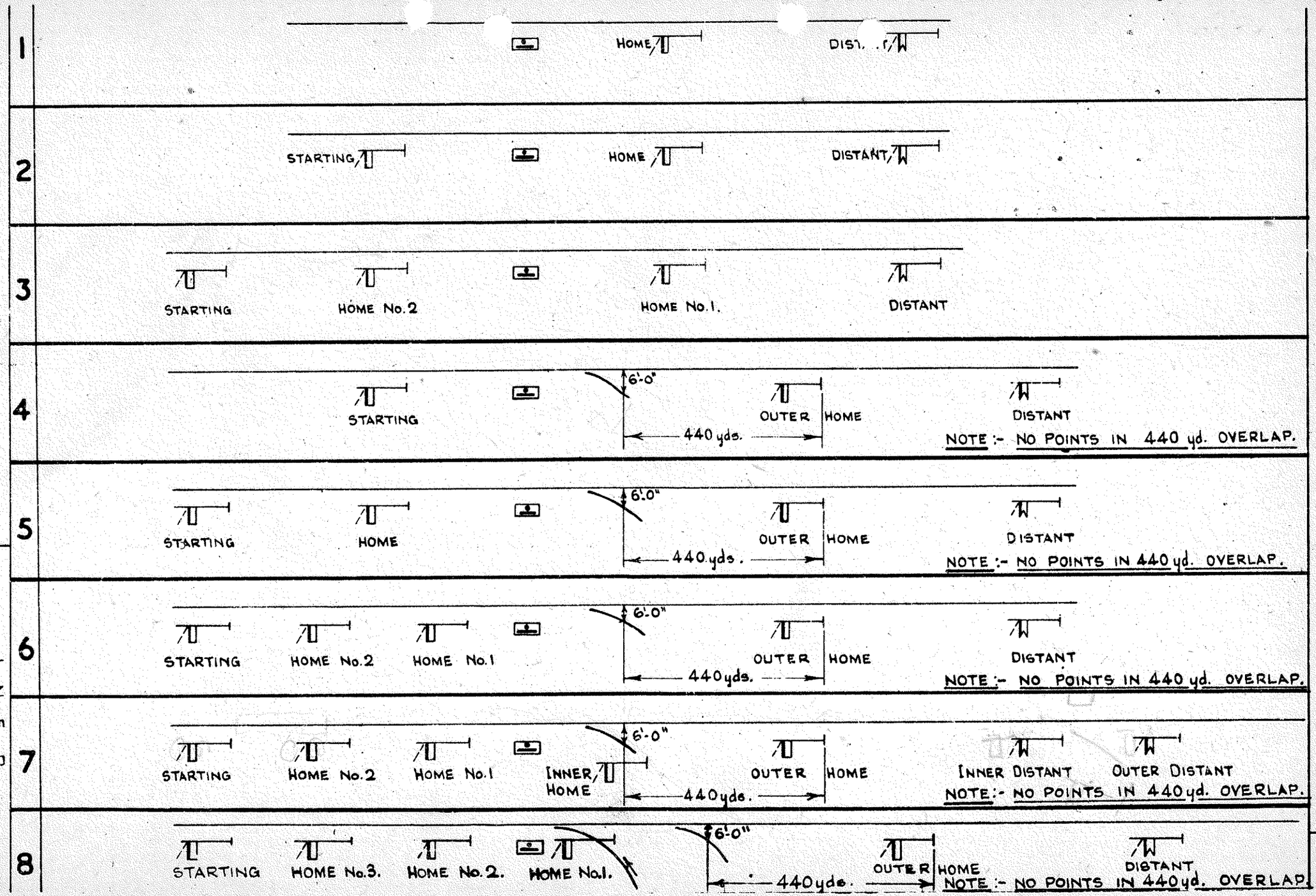

L. N. E. R.
OFFICE OF ASST. CHIEF ENGINEER (SIGNALS)
KING'S CROSS STATION. N.1.

DRAWN BY.
TRACED BY. J. W.
CHECKED BY.
DATE 8.10.43.
EXAMINED BY.

No. 47CC/A500/A

STANDARD SIGNAL ARMS.

SPECIFICATION ON SIGHTING SHEET	PROFILE OF BLADE	LENGTH OF BLADE	BLADE DRAWING Nº.	COLOUR	SPECTACLE	CASTING DRAWING Nº.	LAMP LETTERED	DESCRIPTION
NONE	OR	3'5¾" 3'5¾"	BRS. SM. 7 BRS. SM. 7	RED WHITE BAND YELLOW BLACK CHEVRON	R/G Y/G	MD 365	—	STANDARD FULL SIZE UPPER QUADRANT ARM
3'9" ARM	OR	2'8¾" 2'8¾"	55 LS 921 55 LS 921	RED WHITE BAND YELLOW BLACK CHEVRON	R/G Y/G	MD 365	—	SHORT U.Q. ARM
MINIATURE	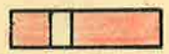	1'9"	BRS. SM. 8	RED WHITE BAND YELLOW BLACK BAND	R/G Y/G	MD 150 A	—	STANDARD MINIATURE UPPER QUADRANT ARM
SHUNTING SIGNAL.		1'9"	BRS. SM. 8.	RED WHITE STRIPE	SMALL WHITE/G	MD 150 A	—	STANDARD SUBSIDIARY UPPER QUADRANT ARM
CALLING ON		1'9"	BRS. S.M 8	RED WHITE STRIPE	SMALL WHITE/G	MD 150 A	"C"	STANDARD SUBSIDIARY UPPER QUADRANT ARM (CALLING ON)
SHUNT ARM		1'9"	BRS. SM. 8	RED WHITE STRIPE	SMALL WHITE/G	MD 150 A	"S"	STANDARD SUBSIDIARY UPPER QUADRANT ARM (SHUNT ARM)
WARNING ARM		1'9"	BRS. SM. 8.	RED WHITE STRIPE	SMALL WHITE/G	MD 150 A.	"W"	STANDARD SUBSIDIARY UPPER QUADRANT ARM (WARNING ARM)

L.N.E.R. SOUTHERN AREA.
SIGNAL & TELEGRAPH ENGINEER'S OFFICE
KINGS CROSS STATION: N.1.

DRAWN BY
TRACED BY A.C.
CHECKED BY
DATE 12-4-44.

SWD 110A

AMENDED OCTOBER 1955 BY S.R.B.

A 8-2-52 JAS	B 25-2-53 G.R.D.
NOTES 3 & 4 ADDED.	C RELAY PROVED DOWN

ORIGINAL No 44CES/A 400/1

STANDARD WIRING DIAGRAM.

3 POSN. S.N. BLOCK.

TRACK CIRCUIT CONTROL WITH ACCEPTANCE EFFECTIVE FOR ONE MOVEMENT ONLY.

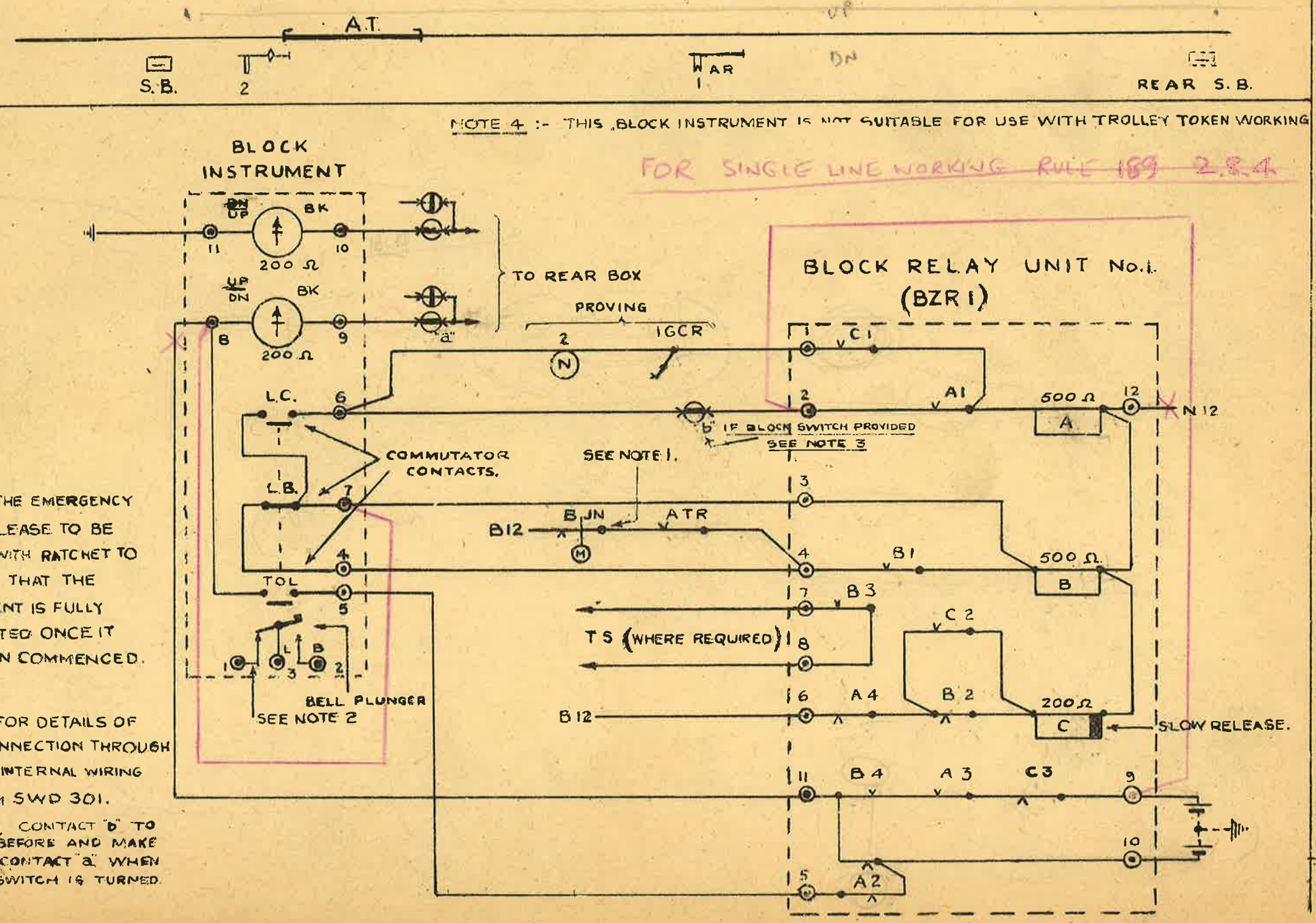

NOTE 1. THE EMERGENCY TIME RELEASE TO BE FITTED WITH RATCHET TO ENSURE THAT THE MOVEMENT IS FULLY COMPLETED ONCE IT HAS BEEN COMMENCED.

NOTE 2. FOR DETAILS OF THIS CONNECTION THROUGH BX SEE INTERNAL WIRING DIAGRAM SWD 301.

NOTE 3 CONTACT "b" TO BREAK BEFORE AND MAKE AFTER CONTACT "a" WHEN BLOCK SWITCH IS TURNED.

RAILWAY EXECUTIVE EASTERN REGION
SIGNAL & TELECOMMUNICATION ENGINEER
KING'S CROSS STATION, N.1.

DRAWN: 9 Y | CHECKED: | DATE 22-9-45

No. SWD 300. B

A 15-2-52	JAS	B 25-2-53	G.R.D.
NOTES 3 & 4 ADDED.		C RELAY PROVED DOWN	

ORIGINAL No 44CES/A 400/1

STANDARD WIRING DIAGRAM.

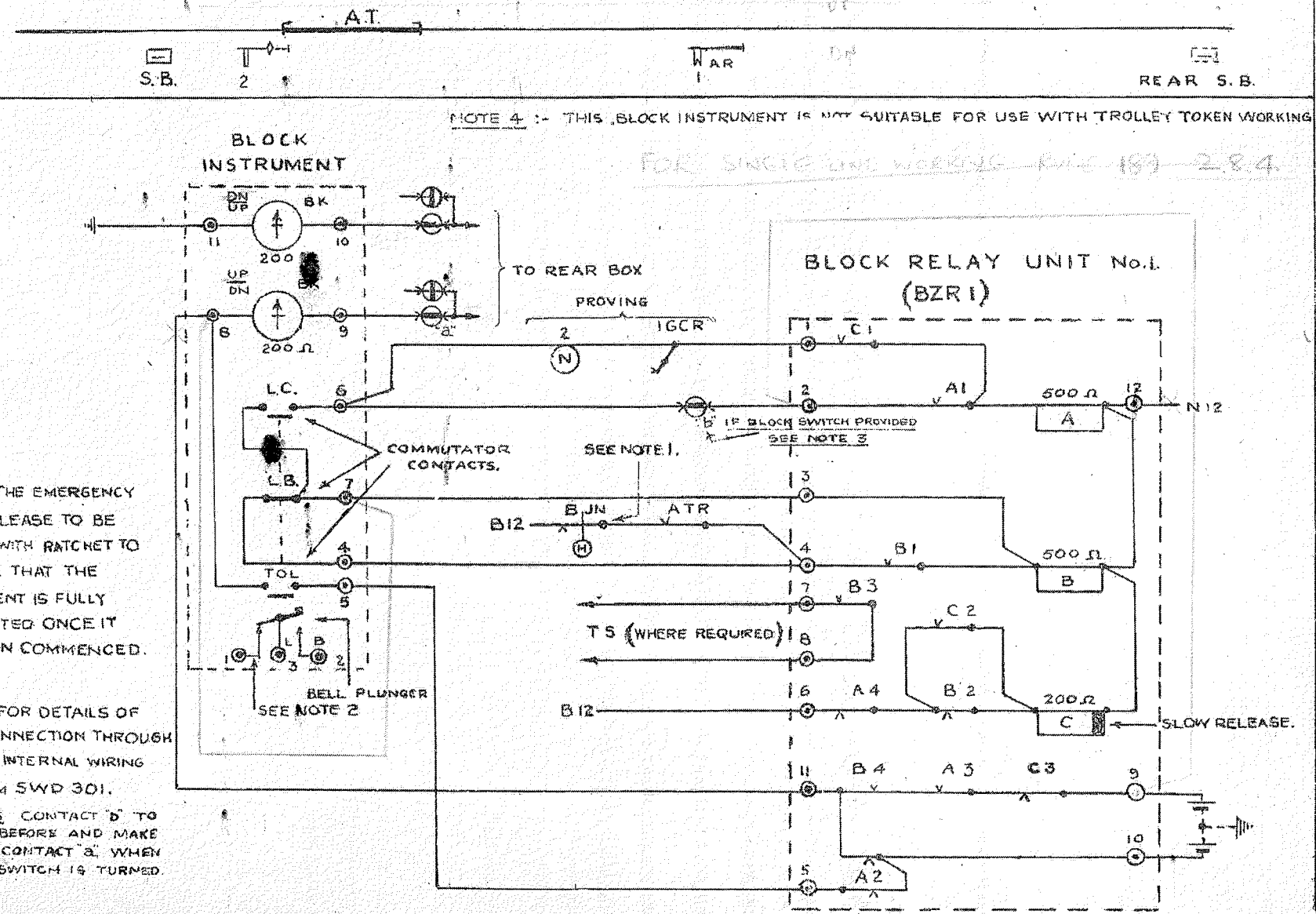

NOTE 1. THE EMERGENCY TIME RELEASE TO BE FITTED WITH RATCHET TO ENSURE THAT THE MOVEMENT IS FULLY COMPLETED ONCE IT HAS BEEN COMMENCED.

NOTE 2. FOR DETAILS OF THIS CONNECTION THROUGH BX SEE INTERNAL WIRING DIAGRAM SWD 301.

NOTE 3. CONTACT "b" TO BREAK BEFORE AND MAKE AFTER CONTACT "a" WHEN BLOCK SWITCH IS TURNED.

3 POSN. S.N. BLOCK.

TRACK CIRCUIT CONTROL WITH ACCEPTANCE EFFECTIVE FOR ONE MOVEMENT ONLY.

RAILWAY EXECUTIVE EASTERN REGION
SIGNAL & TELECOMMUNICATION ENGINEER
KING'S CROSS STATION, N.1.

DRAWN: B Y | CHECKED: | DATE. 22-9-45

No. SWD 300. B

STANDARD WIRING DIAGRAM

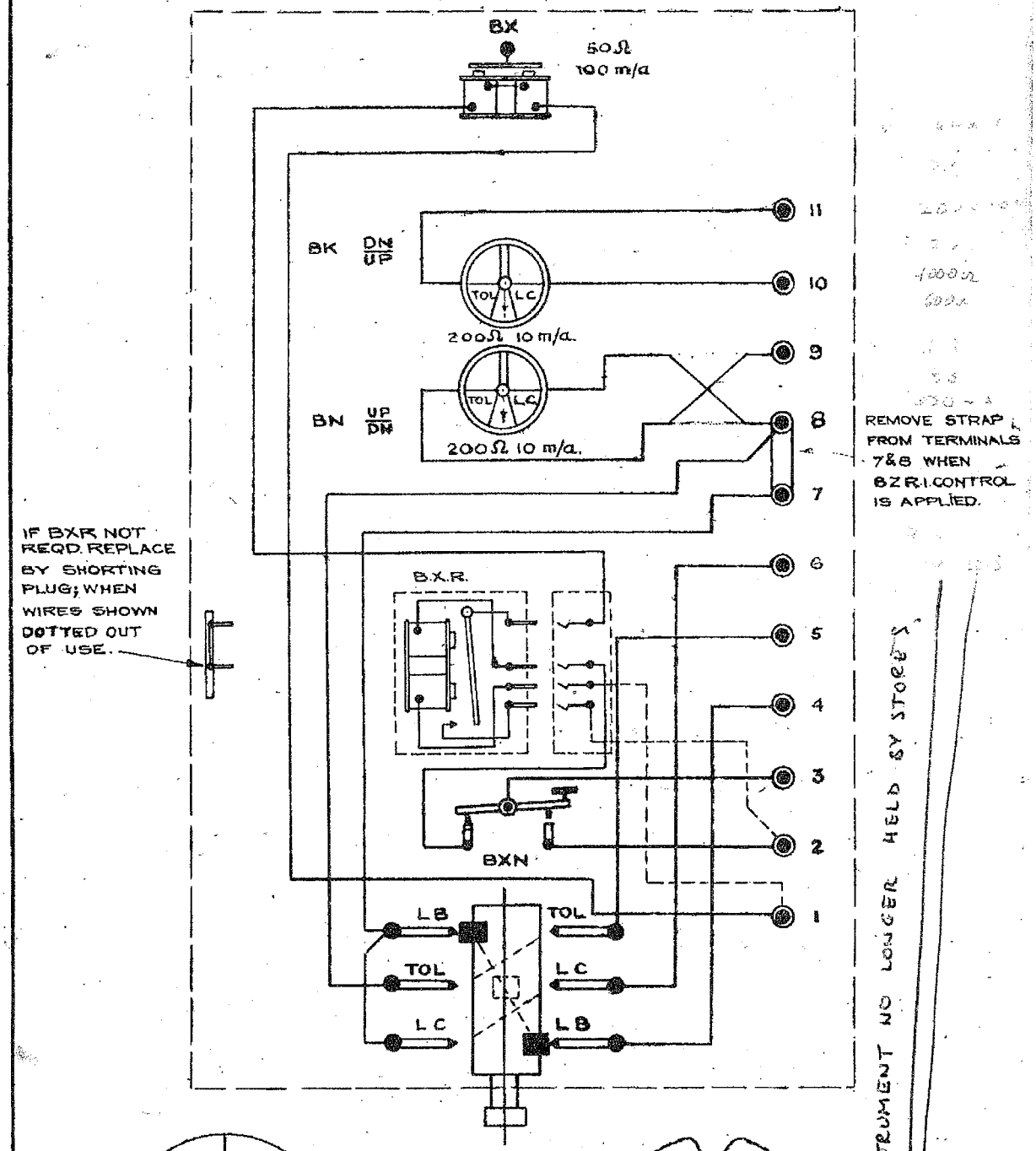

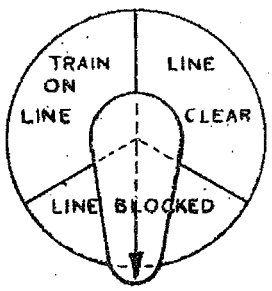

FRONT VIEW
COMMUTATOR PLATE AND HANDLE (NORMAL)

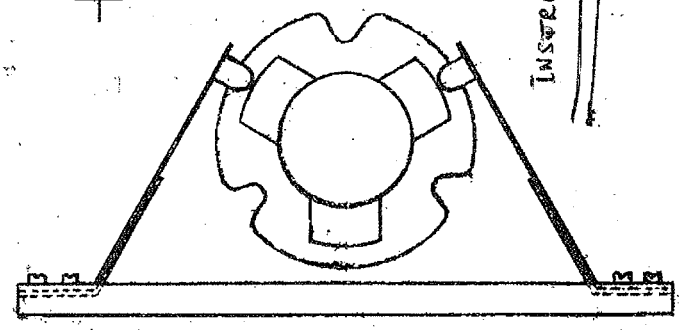

END VIEW
COMMUTATOR BARREL AND SPRINGS.
(NORMAL)

3 POS.N S.N. BLOCK.

DOUBLE DIAL INSTRUMENT.

INTERNAL WIRING.

RAILWAY EXECUTIVE EASTERN REGION
SIGNAL & TELECOMMUNICATION ENGINEER
KING'S CROSS STATION, N.1.

DRAWN: R.Y. CHECKED: DATE: 22-9-48

No. SWD 301.A

WIRES INTERCHANGED BETWEEN TER. NOS. 8&9 AND INDICATOR.

ORIGINAL No SCES/4001/2 8-11-48.

STANDARD WIRING DIAGRAM.

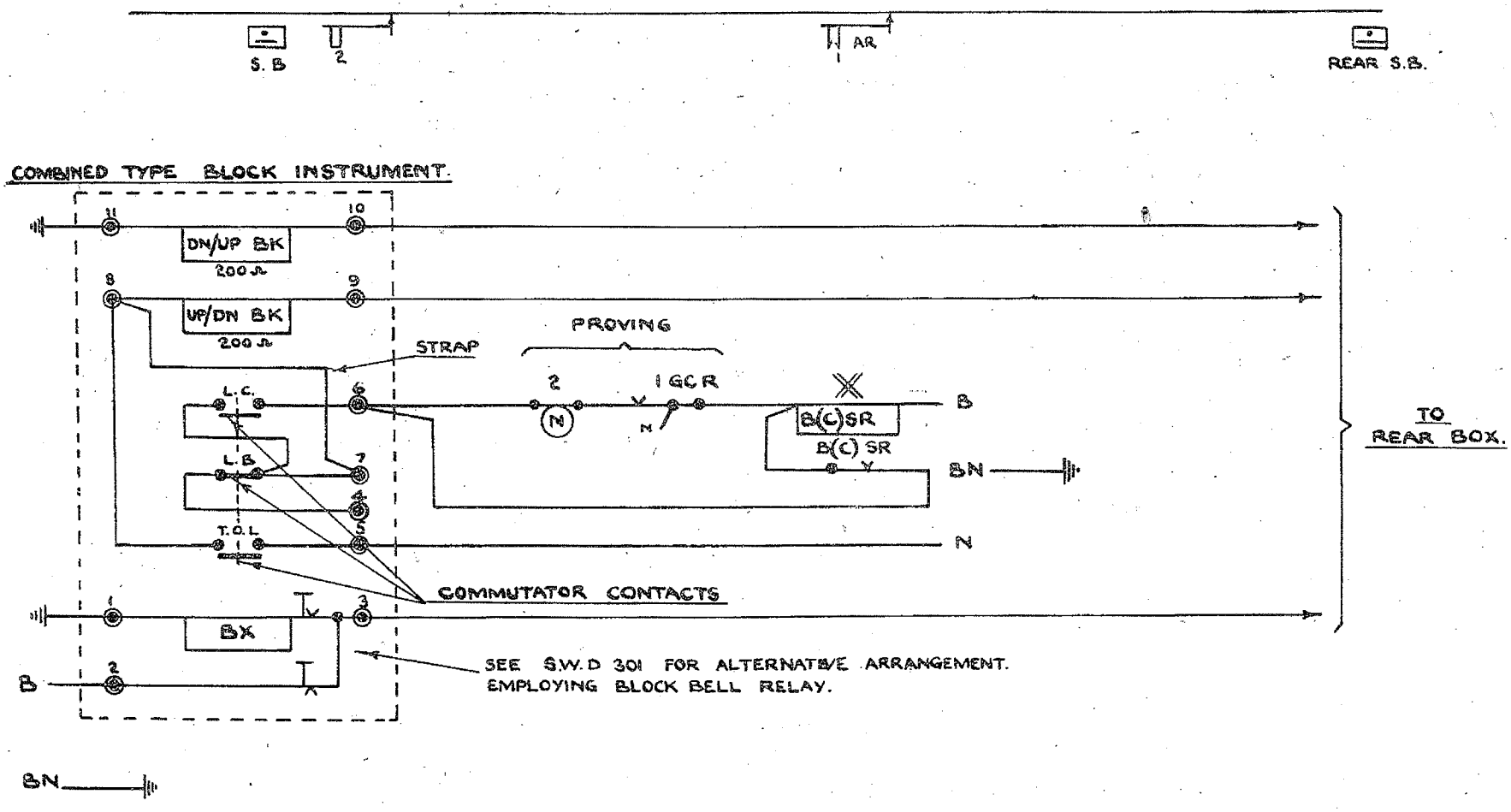

X 200 Ω TELEPHONE TYPE RELAY.

3 POS. S.N. BLOCK.

SIGNAL PROVING CONTROL.

B.R. ~ E.R.

SIGNAL ENGRS. DEPT.
KINGS CROSS STATION.

DRAWN BY. R.Y.
TRACED BY J.R.S.
CHECKED BY N.M.
DATE. 13.12.55

SWD 302

STANDARD WIRING DIAGRAM

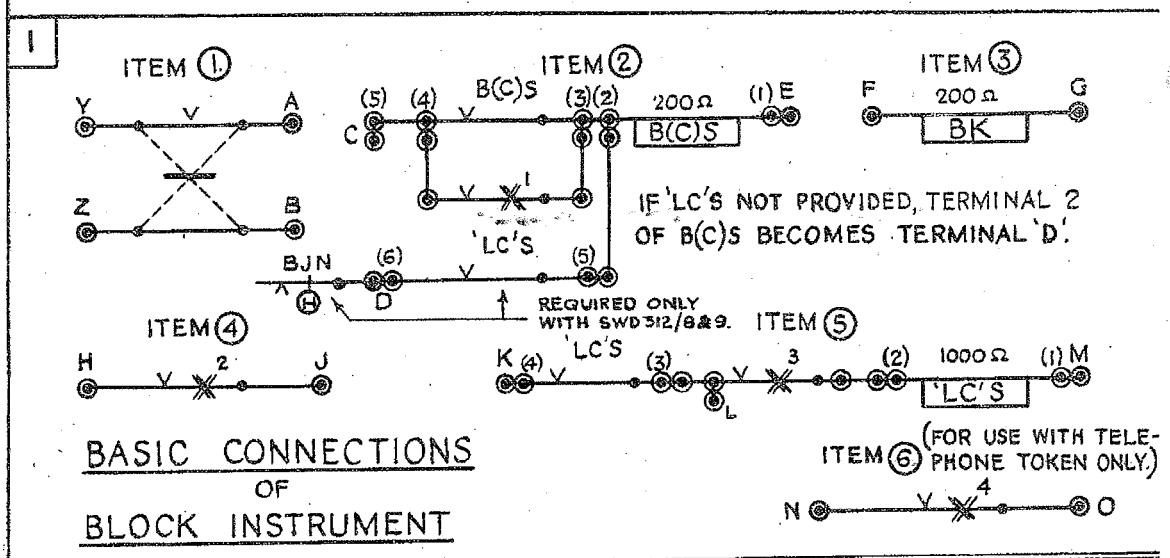

BASIC CONNECTIONS OF BLOCK INSTRUMENT

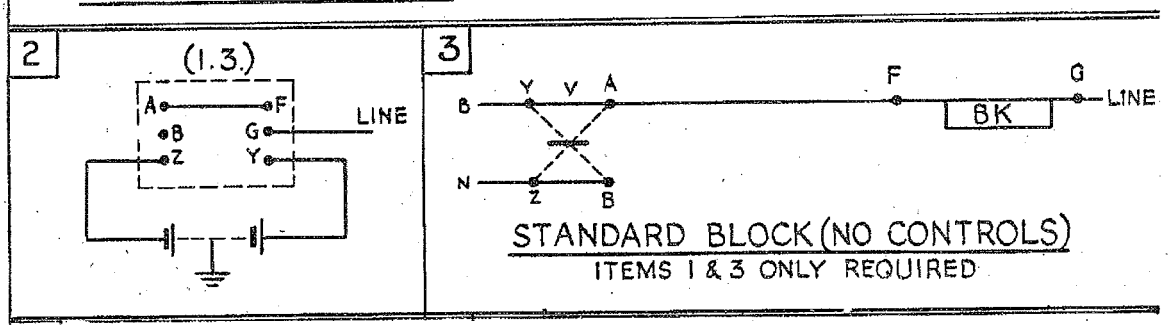

STANDARD BLOCK (NO CONTROLS)
ITEMS 1 & 3 ONLY REQUIRED

NOTES

1 AND 2 CONTACTS BROKEN WHEN COMMUTATOR IS AT "LINE CLEAR".

3 CONTACT BROKEN MOMENTARILY WHEN COMMUTATOR TURNED FROM "LINE CLEAR" TO "LINE BLOCKED" POSITION.

4 CONTACT BROKEN WHEN COMMUTATOR IS AT "LINE CLEAR" OR "TRAIN ON LINE".

THE B(C)S AND 'LC'S RELAYS ARE TELEPHONE TYPE RELAYS MOUNTED ON THE BACK OF THE BLOCK INSTRUMENT.

THE B(T)S RELAY IS A STANDARD 1000Ω LINE RELAY 2F/B. 2F CONTACTS, CONTRACT 415, ITEM 380. (SEE SWD. 312)

A	12 5 52	J.A.S.
		BJN & NOTE ADDED IN ITEM 2 PART 1.
	21-9-50	
		FORMERLY S.W.D. 11

3 WIRE, 3 POSITION SINGLE NEEDLE BLOCK. WIRING OF PEGGER INSTRUMENTS.

L.N.E.R. SOUTHERN AREA.
SIGNAL & TELEGRAPH ENGINEER'S OFFICE
KINGS CROSS STATION. N.1.

DRAWN BY E.A.R.	SWD. 311 A
TRACED BY T.W.E.	
CHECKED BY	DATE 20. 9. 40.

STANDARD WIRING DIAGRAM

1

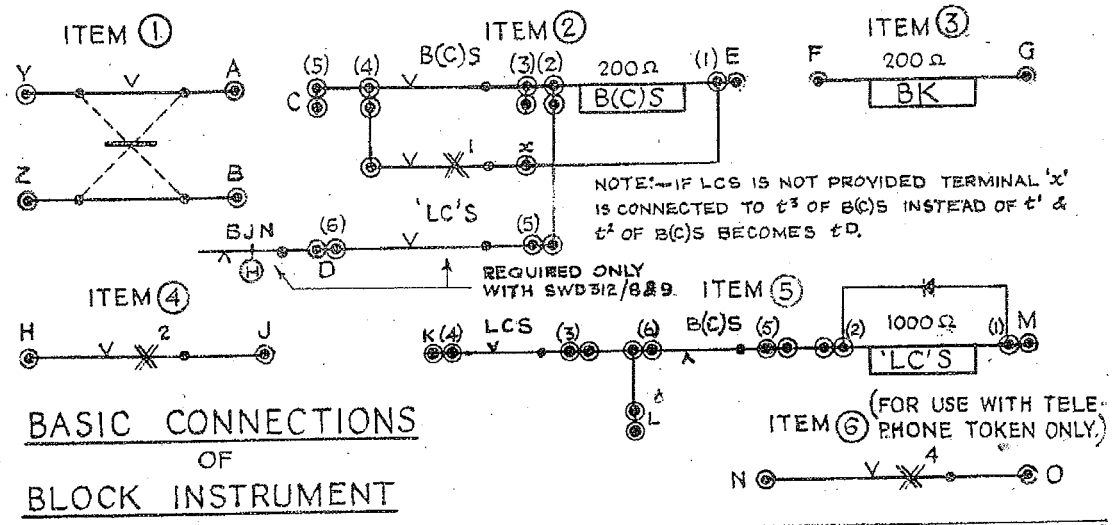

BASIC CONNECTIONS
OF
BLOCK INSTRUMENT

2

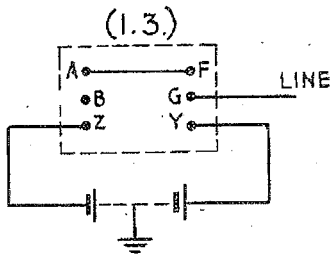

3

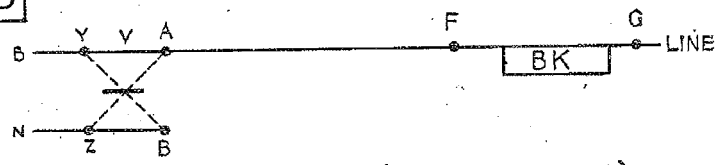

STANDARD BLOCK (NO CONTROLS)
ITEMS 1 & 3 ONLY REQUIRED

NOTES

$\times^1$ AND $\times^2$ CONTACTS ~~BROKEN~~ MADE WHEN COMMUTATOR IS AT "~~LINE CLEAR~~ T.O.L".

$\times^4$ CONTACT BROKEN WHEN COMMUTATOR IS AT "LINE CLEAR" OR "TRAIN ON LINE."

THE B(C)S AND 'LC'S RELAYS ARE TELEPHONE TYPE RELAYS MOUNTED ON THE BACK OF THE BLOCK INSTRUMENT.

THE B(T)S RELAY IS A STANDARD 1000Ω LINE RELAY 2F/B. 2F CONTACTS CONTRACT 415, ITEM 380. (SEE SWD.312)

21-9-50	C	12 5 52	A	1.A3	B	26-1-54	G.W.B.
FORMERLY S.W.D.11		B JN A NOTE ADDED IN ITEM 2 PART 1.			CONTACT $\times^3$ IN LCS CCT. REPLACED BY CONTACT OF B(C)S. B(C)S BY-PASSED BY CONTACT $\times^1$	N.M.

3 WIRE, 3 POSITION SINGLE NEEDLE BLOCK. WIRING OF PEGGER INSTRUMENTS.

L.N.E.R. SOUTHERN AREA.
SIGNAL & TELEGRAPH ENGINEER'S OFFICE
KINGS CROSS STATION, N.1.

DRAWN BY E.A.R.	SWD.311[13]
TRACED BY T.W.E.	
CHECKED BY	DATE 20.9.40.

STANDARD WIRING DIAGRAM

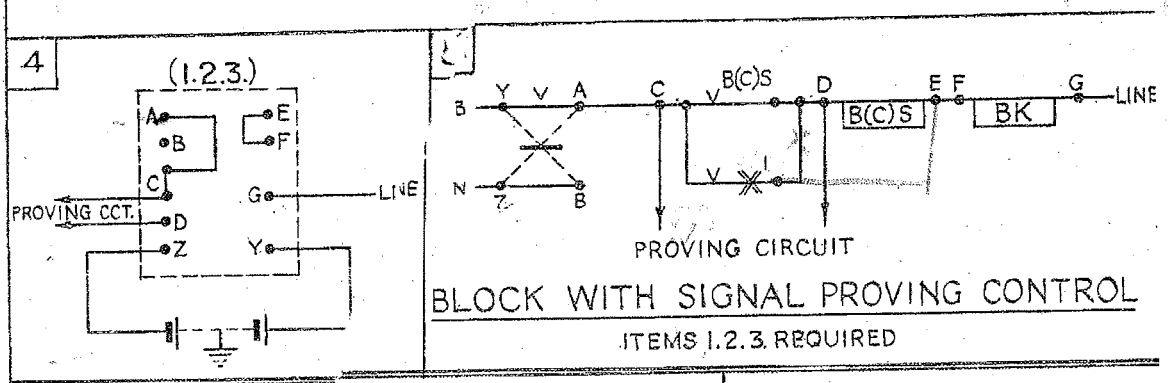

BLOCK WITH SIGNAL PROVING CONTROL

ITEMS 1.2.3. REQUIRED

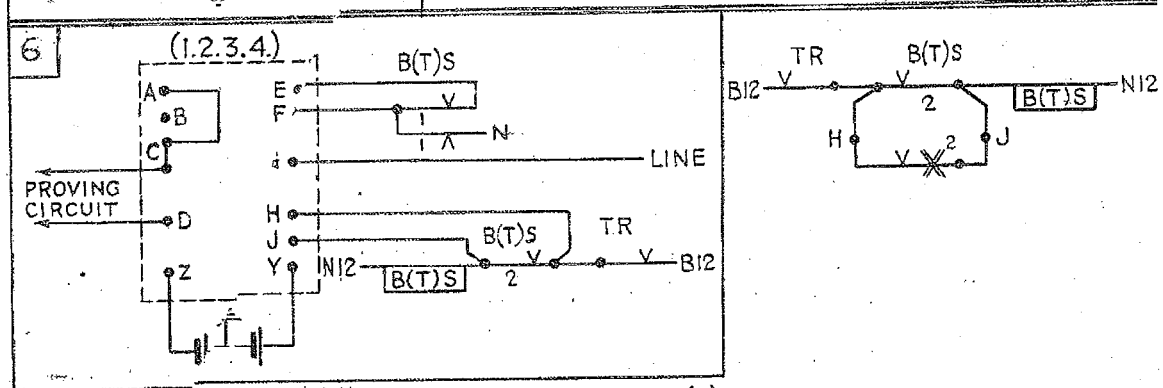

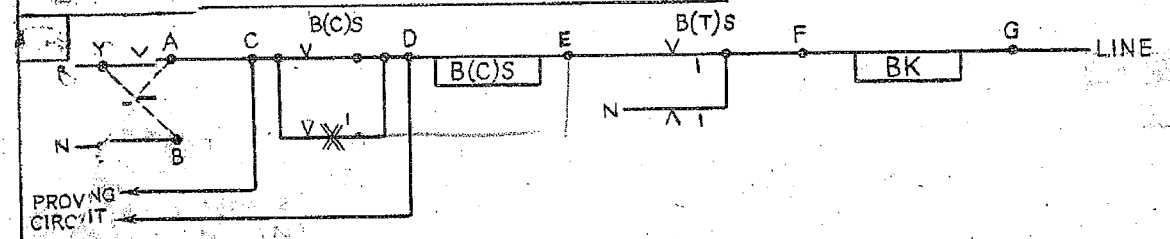

TRACK CIRCUIT CONTROL WITH SIGNAL PROVING

ITEMS 1.2.3.&4 REQUIRED

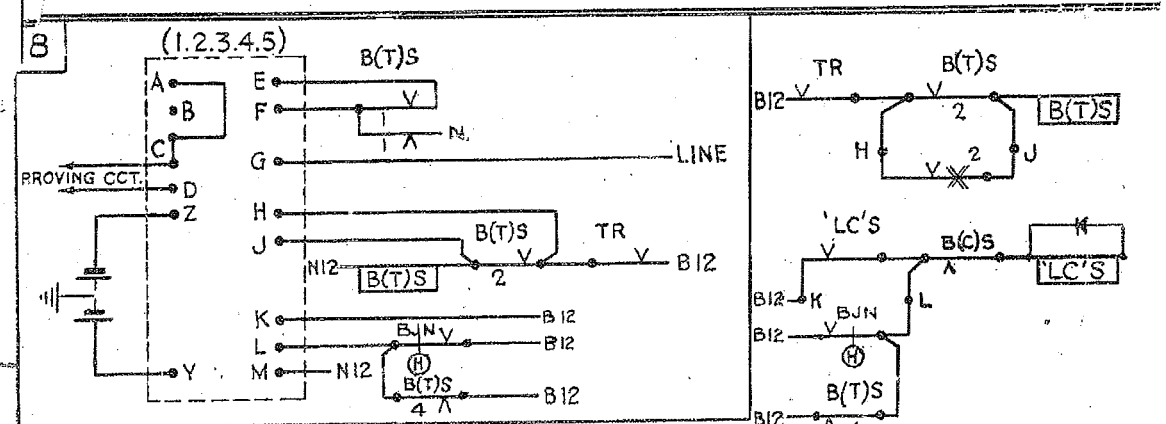

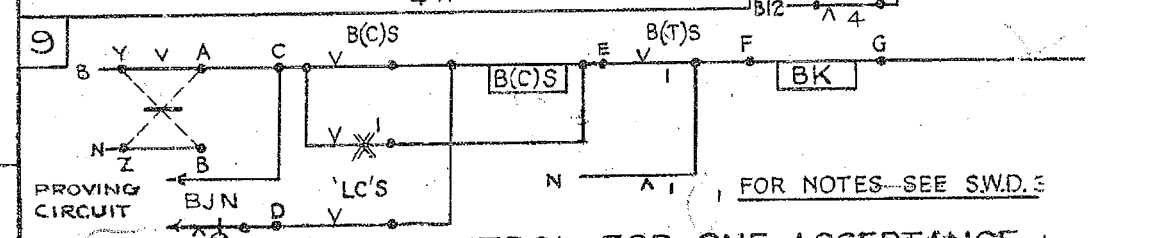

FOR NOTES SEE S.W.D. 5

TRACK CIRCUIT CONTROL FOR ONE ACCEPTANCE

ITEMS 1.2.3.4.&5 REQUIRED

1	BJN ADDED IN PART 9.	2	CONTACT OF BJN IN 'LC'S
		3	CCT REPLACED BY CONTACT OF B(C)S. B(C)S BY-PASSED BY CONTACT OF N.M.

3 WIRE 3 POSITION SINGLE NEEDLE BLOCK. WIRING OF PEGGER INSTRUMENTS.

L.N.E.R. SOUTHERN A

SIGNAL & TELEGRAPH ENGINEER'S (

KINGS CROSS STATION. N.

DRAWN BY E.A.R.

TRACED BY T.W.E.

CHECKED BY

S.W.

STANDARD WIRING DIAGRAM

1

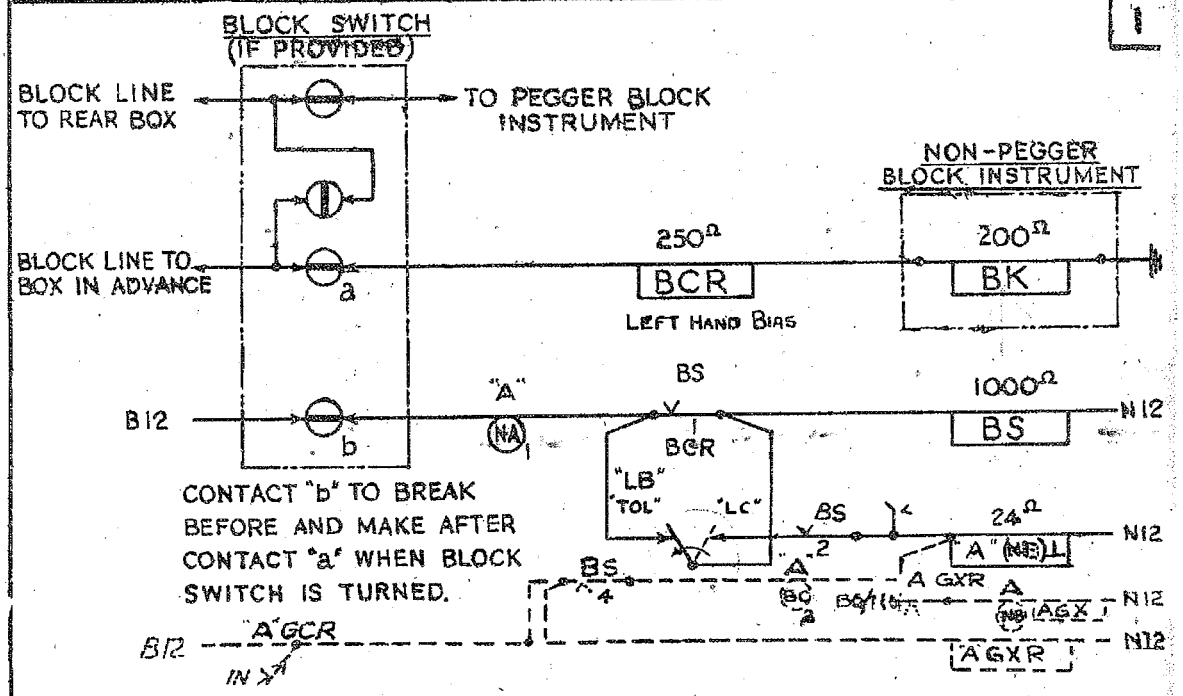

NOTE:- WIRING SHEWN DOTTED IN ITEMS 1. & 2. TO BE PROVIDED WHERE A DISC LEADS UP TO A STARTING SIGNAL WHICH IS TO BE PROVED AT DANGER.

WHERE NO LOCK EXISTS ON THE SIGNAL TO THE REAR AND THE NORMAL PROVING IS EFFECTED MECHANICALLY THE LOCK TO BE PROVIDED ON THE STARTING SIGNAL MUST BE OF THE FORCED DROP TYPE.

THREE WIRE, THREE INDICATION BLOCK.

2

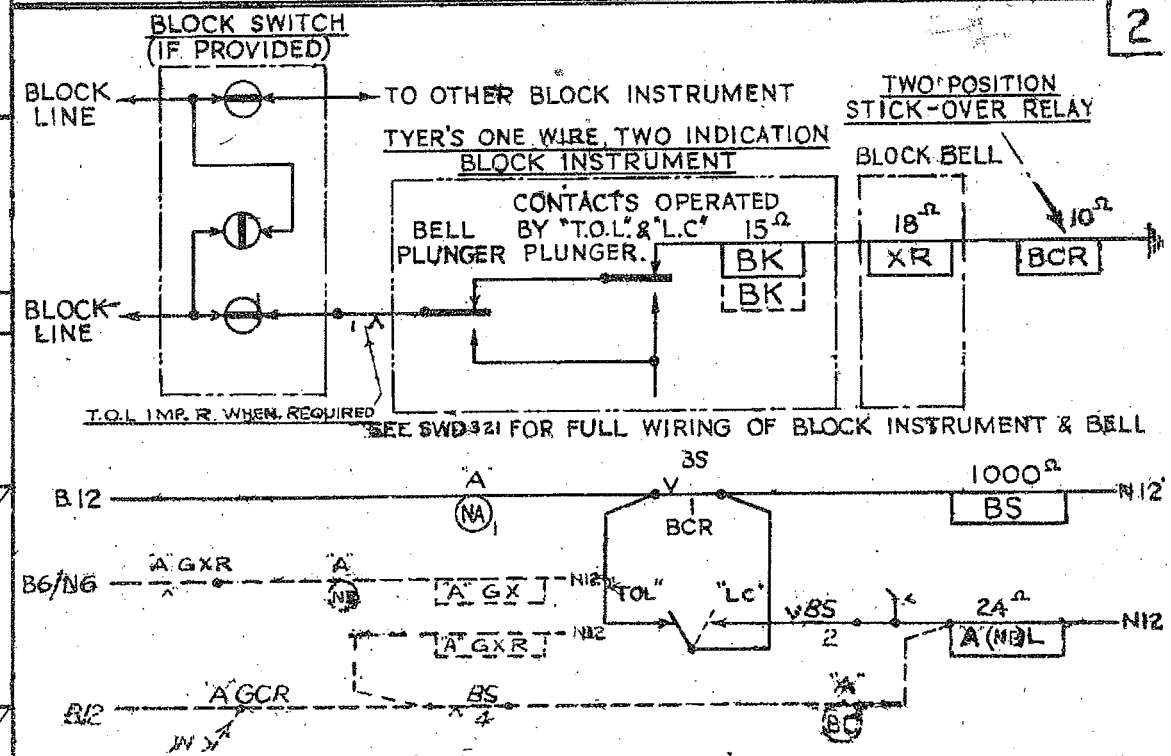

NOTE:- FOR SINGLE LINE BLOCK (STARTING SIGNAL CONTROL) SEE SWD 322

TYER'S ONE WIRE, TWO INDICATION BLOCK

5	20-1-44	J.D.G.	BLOCK SWITCH CONTACT DELETED & N B12 FEED TO XNA. SEE ITEM 2.	C	24-10-44	J.D.G.	REFERENCE TO SINGLE LINE WORKING ALTERED. SEE ITEM 2.	D	6-1-50	R.S.E.	BACKLOCK CIRCUIT & REFERENCE TO FORCED DROP LOCK ADDED. ITEMS 1. & 2.	2-9-50	J.A.	REVISED S.W.O.13.	4-4-51	G.	CONTA. 15 2a ALTERED TO B52f IN X(N)L CIRCUIT SEE ITEM 2	B	12-5-52	J.A.S.	GX CIRCUITS ADDED

CONTROL OF STARTING SIGNAL BY BLOCK INST. PEGGED TO "LINE CLEAR." RELEASE EFFECTIVE FOR ONE MOVEMENT ONLY.

L.N.E.R. SOUTHERN AREA.
SIGNAL & TELEGRAPH ENGINEER'S OFFICE
KINGS CROSS STATION, N.1.

DRAWN BY J.R. McL.
TRACED BY T.W.E.
CHECKED BY
DATE 4.12.43

SWD 313

STANDARD WIRING DIAGRAM.

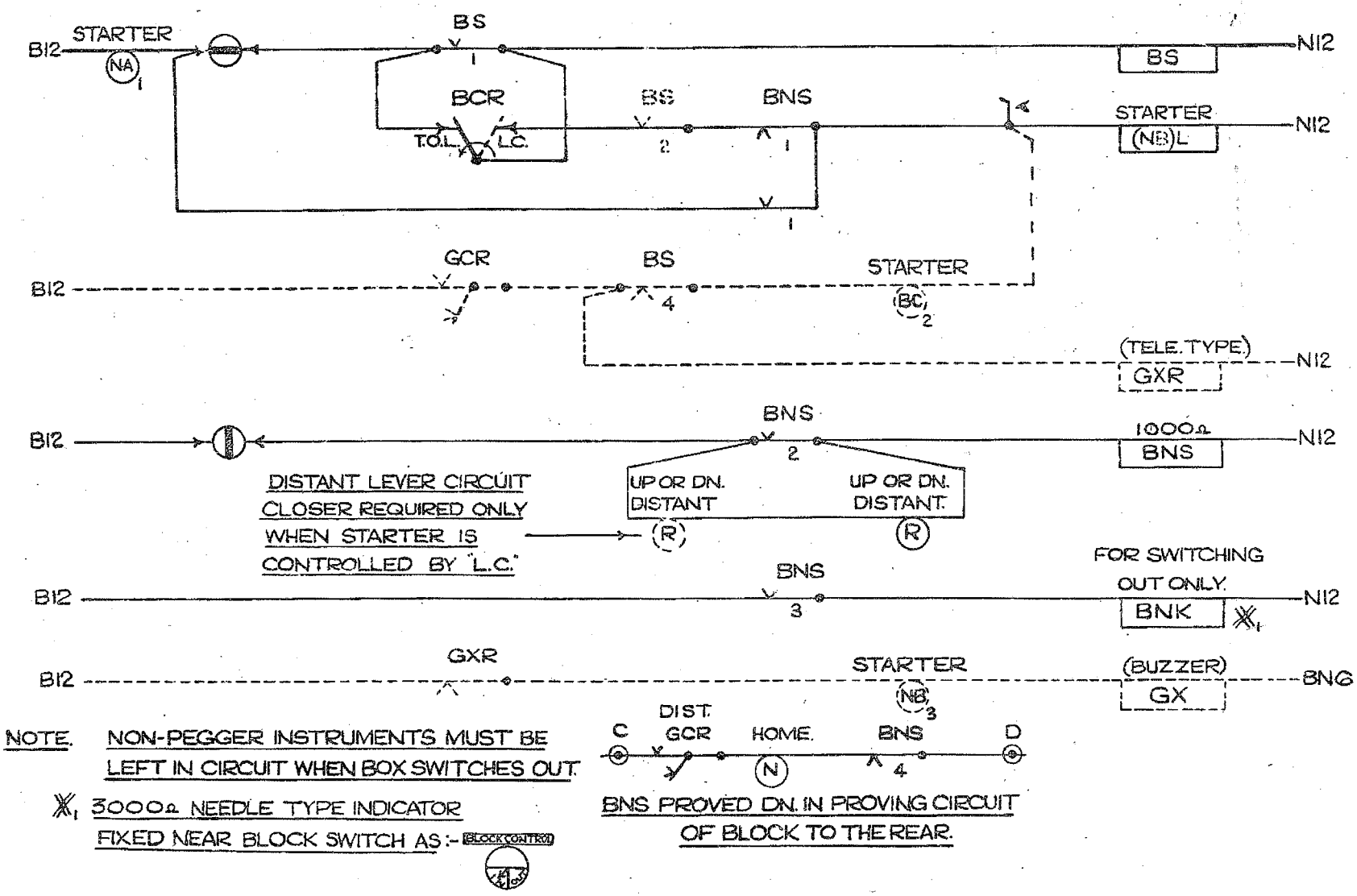

L.C. RELEASE CIRCUIT WHEN BOX IS SWITCHED OUT & STARTING SIGNALS REPLACED FOR OPERATION OF LEVEL CROSSING GATES. (ARRANGEMENT WHEN LOCK ON BLOCK SWITCH DOES NOT EXIST.)

R.E. ~ E.R.

SIGNAL & TELECOMMUNICATIONS ENG^RS
KINGS CROSS STATION, LONDON, N.1.

DRAWN BY V.C.
TRACED BY R.S.T.
CHECKED BY N.M.

SWD 314.

DATE. 24·4·53

STANDARD WIRING DIAGRAM.

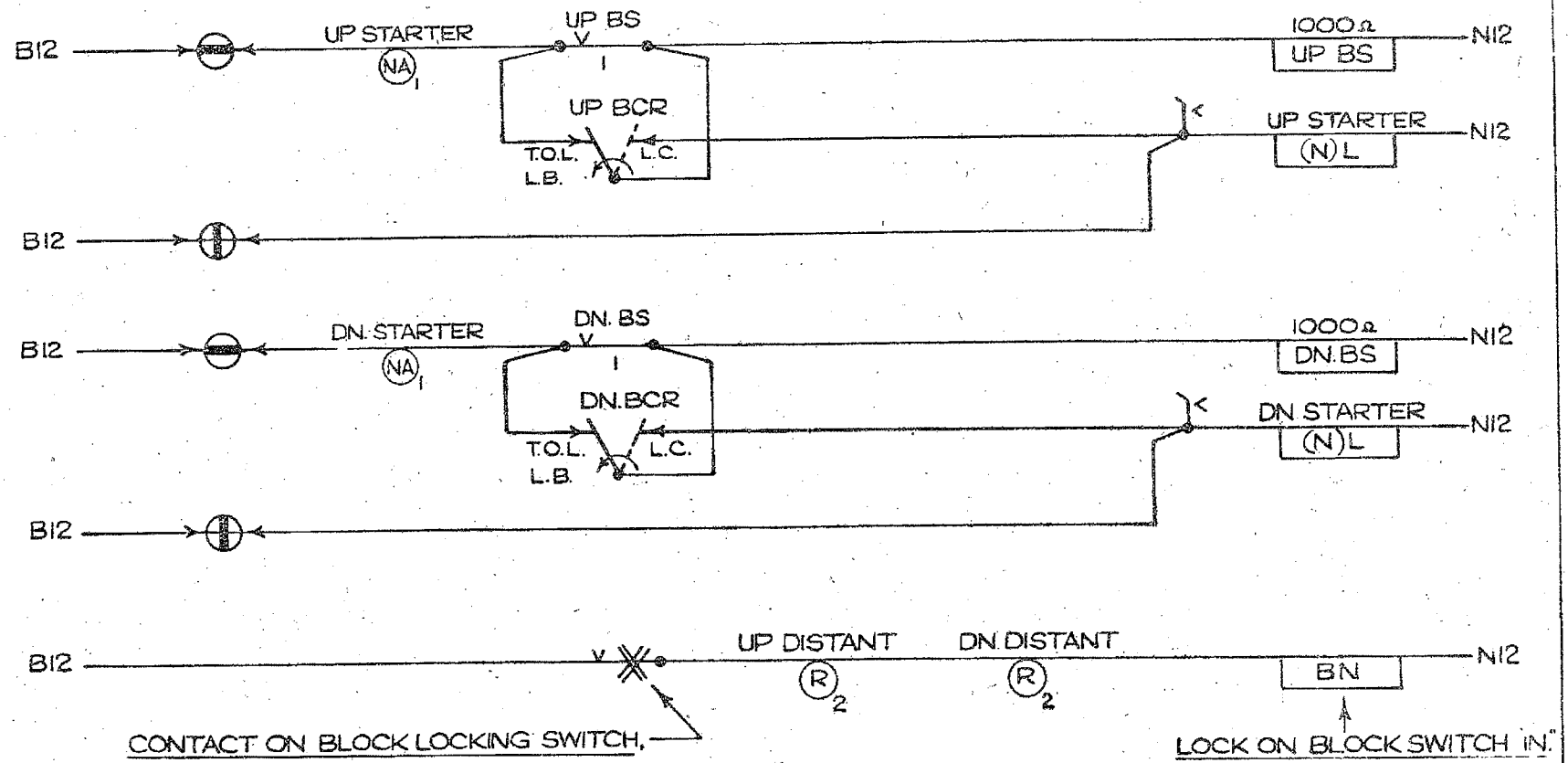

CONTACT ON BLOCK LOCKING SWITCH, MADE WHEN SWITCH IS NORMAL.

LOCK ON BLOCK SWITCH IN.

L.C. RELEASE CIRCUIT WHEN BOX IS SWITCHED OUT & STARTING SIGNALS REPLACED FOR OPERATION OF LEVEL CROSSING GATES. (ARRANGEMENT WHEN LOCK ON BLOCK SWITCH EXISTS.)

R.E. ~ E.R.	
SIGNAL & TELECOMMUNICATIONS ENGR. KINGS CROSS STATION, LONDON, N.1.	
DRAWN BY	SWD. 315.
TRACED BY R S T	
CHECKED BY N M	DATE 27·4·53

STANDARD WIRING DIAGRAM

1.

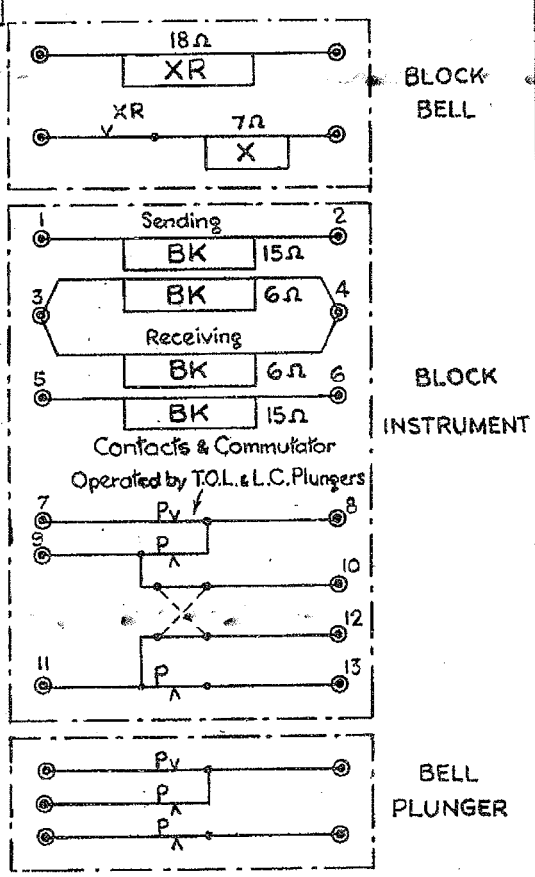

GENERAL ARRANGEMENT

2.

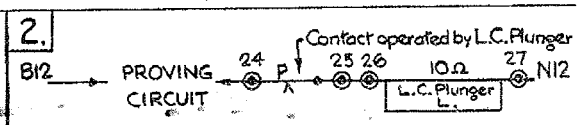

LOCK ON LINE CLEAR PLUNGER

Fitted for Signal Proving where Track Control is not provided, but always required where Trolley Token working exists.

3.

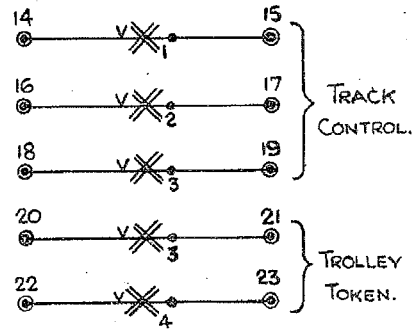

X_1 Contact made when commutator at Line Clear. Broken before X_2 when plunging Train on Line.

X_2 Contact broken when T.O.L. Plunger Depressed.

X_3 Contact made when commutator at Train on Line.

X_4 Contact made when Train Passed Flap turned to right.

SPECIAL CONTACTS FITTED IN BLOCK INSTRUMENT.

4

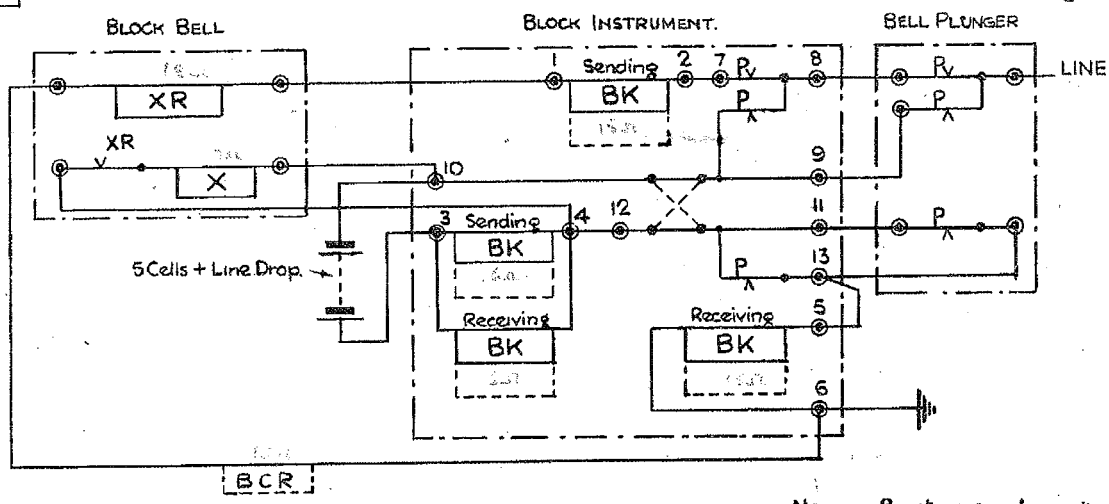

Minimum Operating Currents — Block Bell _____ 0·4 Amp.
Bell Relay & Indicators. _ 0·04 Amp.

NOTE — Resistances and operating currents vary with different instruments and the values stated are typical only.

STANDARD BLOCK — NO CONTROLS.

TYER'S ONE WIRE TWO POSITION BLOCK INSTRUMENT.

L.N.E.R. SOUTHERN AREA
SIGNAL & TELEGRAPH ENGINEER'S OFFICE
KINGS CROSS STATION N1

DRAWN BY JERL.	SWD 321 A
TRACED BY	
CHECKED BY	DATE 11.9.41.

A	12·5·52	J.A.S. BCR ADDED
	21·9·50	FORMERLY SWD 14
B	18·6·43	NOTE RE Trolley Token Working added in Item 2

A 8.2.43	B 17.3.43	C 18.6.43	21 9 50	A 12-5-52
Block bell return was connected to terminal 10.	Electrolytic Condenser added.	L.C. PLUNGER LOCK ADDED	FORMERLY S.W.D. 15.	BCR ADDL.

STANDARD WIRING DIAGRAM

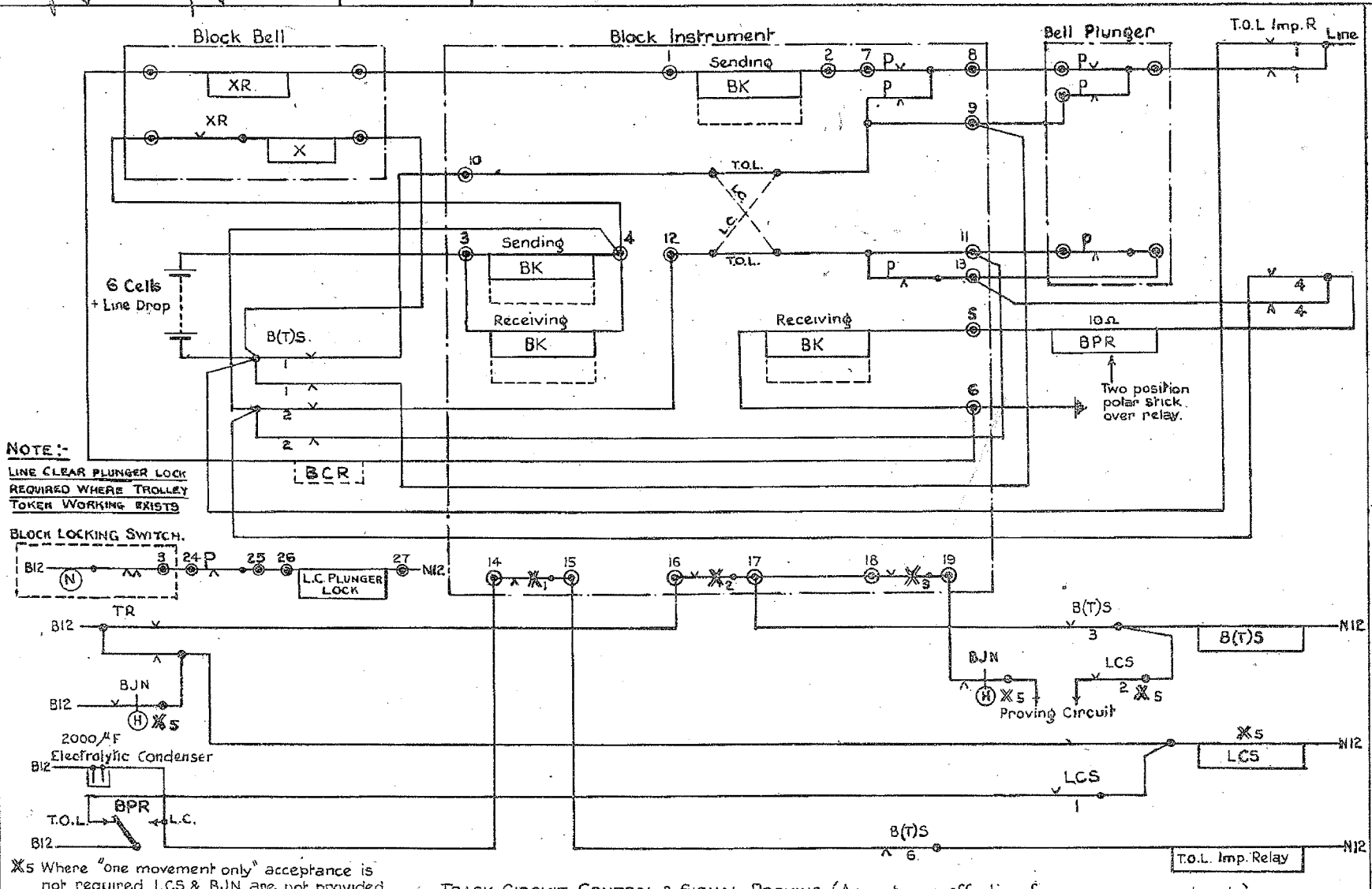

X5 Where "one movement only" acceptance is not required LCS & BJN are not provided. Other circuits as shown.

TRACK CIRCUIT CONTROL & SIGNAL PROVING (Acceptance effective for one movement only).

TYER'S ONE WIRE TWO POSITION BLOCK INSTRUMENT.

L.N.E.R. SOUTHERN AREA.
SIGNAL & TELEGRAPH ENGINEER'S OFFICE
KINGS CROSS STATION. N.1

DRAWN BY J.R. McL
TRACED BY W.T.
CHECKED BY

SWD322 A

DATE 11. 9. 41.

STANDARD WIRING DIAGRAM

1

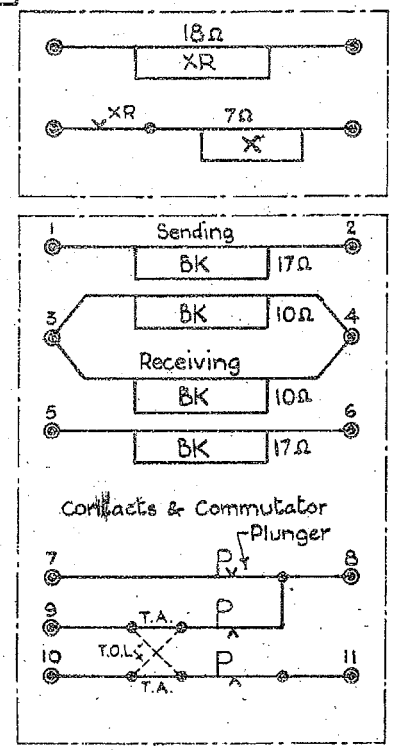

INDICATIONS
"Train Arrived" (Normal)
"Train on Line"

2

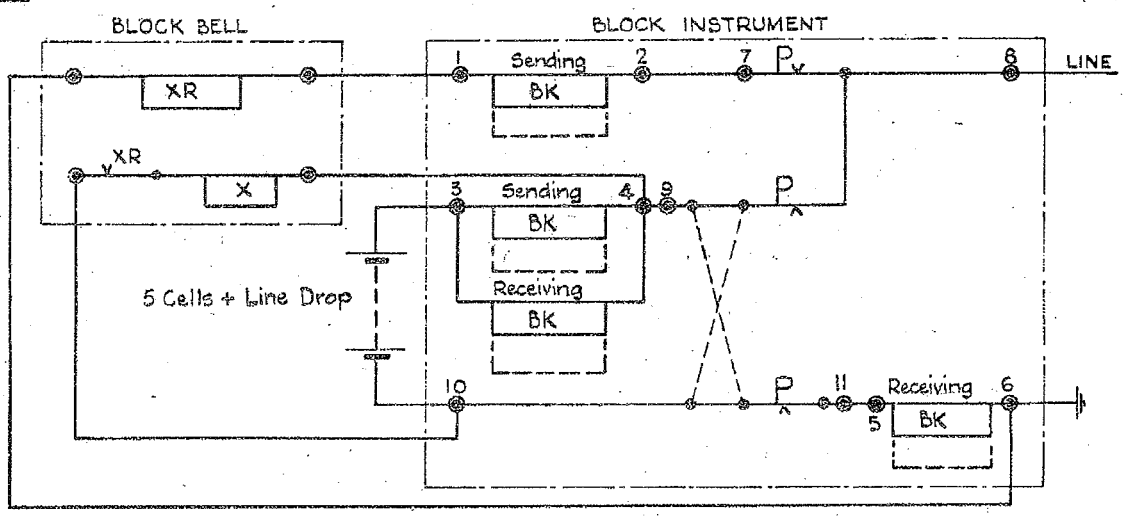

NOTE Resistances given are typical and may vary with different instruments.

STANDARD BLOCK - NO CONTROLS

TYER'S ONE WIRE, TWO POSITION, SINGLE LINE, BLOCK INSTRUMENT.

L.N.E.R. SOUTHERN AREA.
SIGNAL & TELEGRAPH ENGINEER'S OFFICE
KINGS CROSS STATION N.1.

DRAWN BY tak	SWD 325
TRACED BY tak	
CHECKED	DATE 11.1.43.

FORMERLY SWD 16 | 5·1·52 | 3·5

25·1·52 J.S.

FORMERLY SWD 17

STANDARD WIRING DIAGRAM

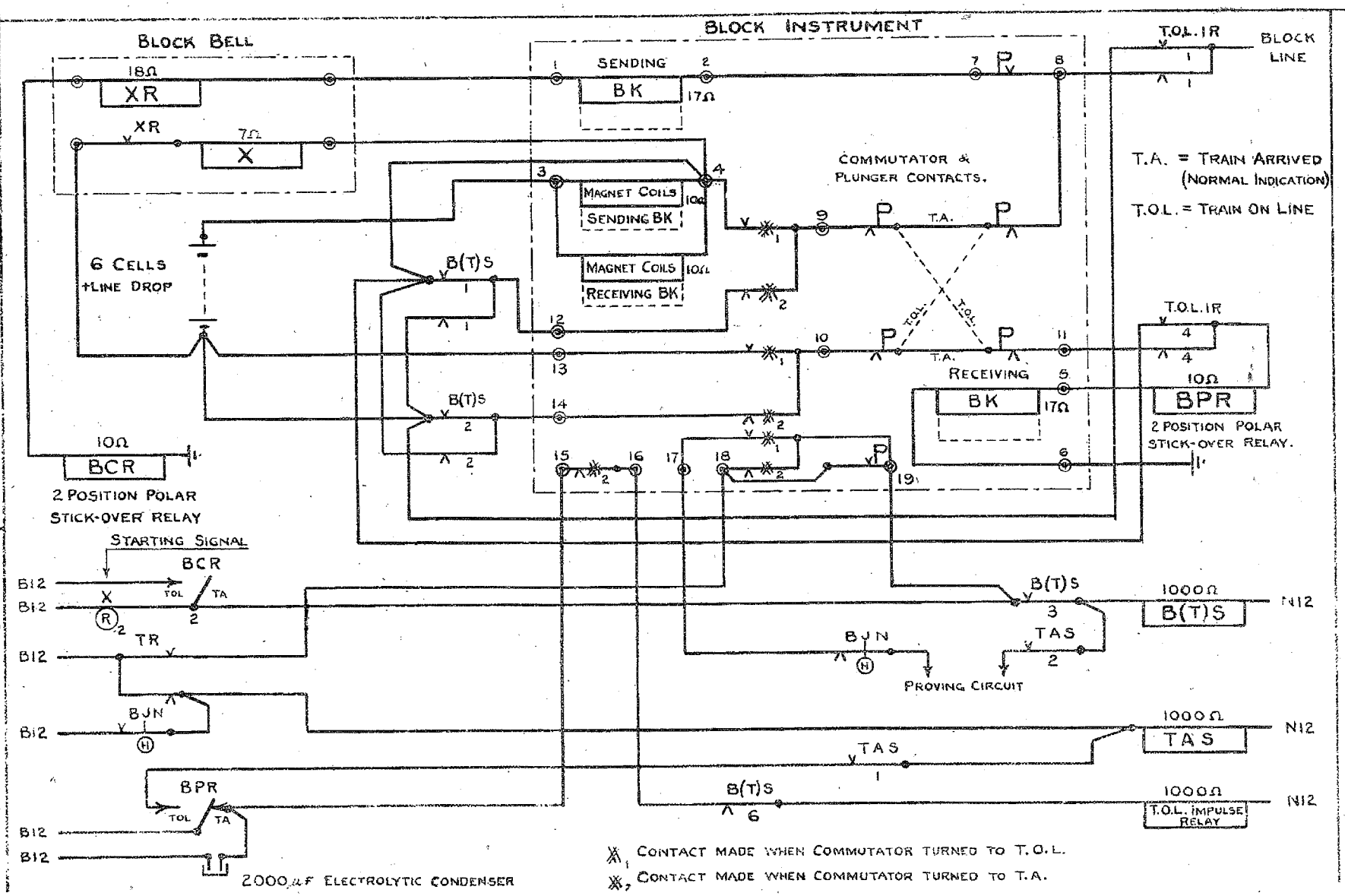

TYER'S ONE WIRE. TWO POSITION

SINGLE LINE BLOCK INSTRUMENT

TRACK CIRCUIT CONTROL & SIGNAL PROVING

EFFECTIVE FOR ONE MOVEMENT ONLY.

L.N.E.R. SOUTHERN AREA

SIGNAL & TELEGRAPH ENGINEER'S OFFICE

KINGS CROSS STATION, N.1.

DRAWN BY J.O.G.

TRACED BY

CHECKED BY

DATE 9-6-44

SWD 326

STANDARD WIRING DIAGRAM

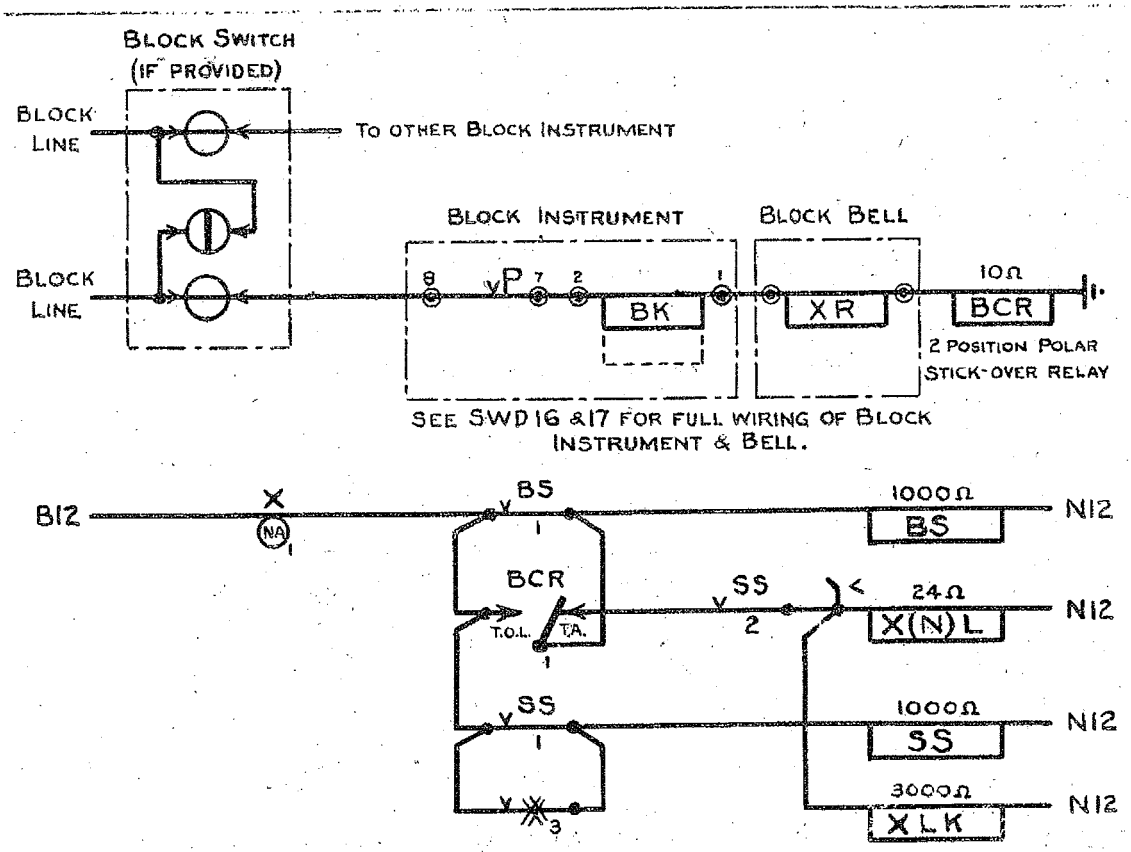

X STARTING SIGNAL LEVER.

$\mathbb{X}_3$ CONTACT IN TICKET BOX MADE WHEN LID OPEN.

LK LOCKED/FREE INDICATOR BALANCED TO "LOCKED"

NOTE. FOR DOUBLE LINE BLOCK (STARTING SIGNAL CONTROL) SEE SWD 313

TYERS ONE WIRE TWO INDICATION SINGLE LINE BLOCK.

CONTROL OF STARTING SIGNAL BY BLOCK AND TRAIN STAFF. RELEASE EFFECTIVE FOR ONE MOVEMENT ONLY.	L.N.E.R. SOUTHERN AREA. SIGNAL & TELEGRAPH ENGINEER'S OFFICE KINGS CROSS STATION, N.1.	
	DRAWN BY J.O.G.	SWD 327
	TRACED BY	
	CHECKED BY	DATE 23-6-44.

25-1-52 J.S. FORMERLY SWD 18

STANDARD WIRING DIAGRAM

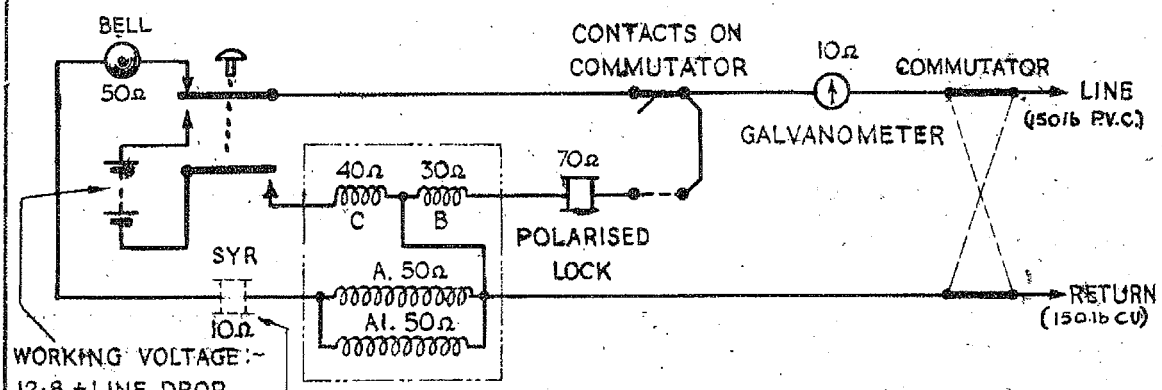

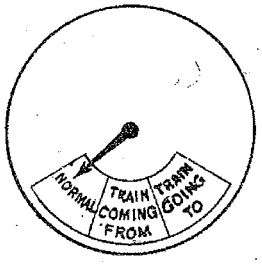

A & AI. POLARISED OR INDICATING COILS.

B. LIFTS STOP OUT TO ALLOW NEEDLE TO GO RIGHT OVER TO "TRAIN GOING TO" INDICATION.

C. PUTS STOP IN TO PREVENT NEEDLE GOING BEYOND "TRAIN COMING FROM" INDICATION.

METHOD OF OPERATION

OPERATION	A		B	
	INDICATION	COILS ENERGISED	INDICATION	COILS ENERGISED
'B' ASKS "IS LINE CLEAR"?	NORMAL	A, AI. (IN PHASE)	NORMAL	C. (STOP IN)
'A' REPLIES "LINE CLEAR" AND HOLDS IN	NORMAL	C. (STOP IN)	NORMAL	A AI. (IN PHASE)
'A' HOLDS IN, 'B' TURNS COMM. TO 90°	NORMAL	C. (STOP IN)	NORMAL	B. (STOP OUT)
'A' HOLDS IN 'B' TURNS COMM. TO 180° & GIVES ONE PLUNGE TO 'A'	NORMAL	C. (STOP IN)	TRAIN GOING TO	A, AI. (OUT OF PHASE)
'B' SENDS "ENTERED SECTION"	TRAIN COMING FROM	A. AI. (OUT OF PHASE)	TRAIN GOING TO	C.
'A' ACKNOWLEDGES "ENTERED SECTION"	TRAIN COMING FROM	C.	TRAIN GOING TO	A, AI. (OUT OF PHASE)
TOKEN ARRIVES AT 'A' AND PLACED IN INSTRUMENT. COMM. TURNED TO 180°. 'A' GIVES OUT OF SECTION.	TRAIN COMING FROM	C.	NORMAL	A. AI. (IN PHASE)
'B' ACKNOWLEDGES "OUT OF SECTION"	NORMAL	A. AI. (IN PHASE)	NORMAL	C. (STOP IN)

"METHOD OF OPERATION" SUPERSEDES DRG. No. LV. 4236

NOTE WHERE LONG & SHORT SECTION WORKING IS IN FORCE OR INTERMEDIATE INSTRUMENTS ARE USED, INDICATOR DIAL IS MODIFIED TO READ 'TOKEN IN' IN PLACE OF 'NORMAL', & 'TOKEN OUT' IN PLACE OF 'TRAIN COMING FROM' & 'TRAIN GOING TO'.

21-9-50	A	19-5-52	TYPE OF LINE WIRE INDICATED
	B	15-3-57	NOTE ADDED. SEQUENCE OF OPERATION AMENDED N.M.

FORMERLY SWD. 3.

TYER'S KEY TOKEN INSTRUMENT. ORIGINAL FORM.

L.N.E.R. SOUTHERN AREA.
SIGNAL & TELEGRAPH ENGINEER'S OFFICE
KINGS CROSS STATION, N.1.

DRAWN BY T.W.E.
TRACED BY T.W.E.
CHECKED BY
SWD. 341
DATE 1. 8. 40.

STANDARD WIRING DIAGRAM

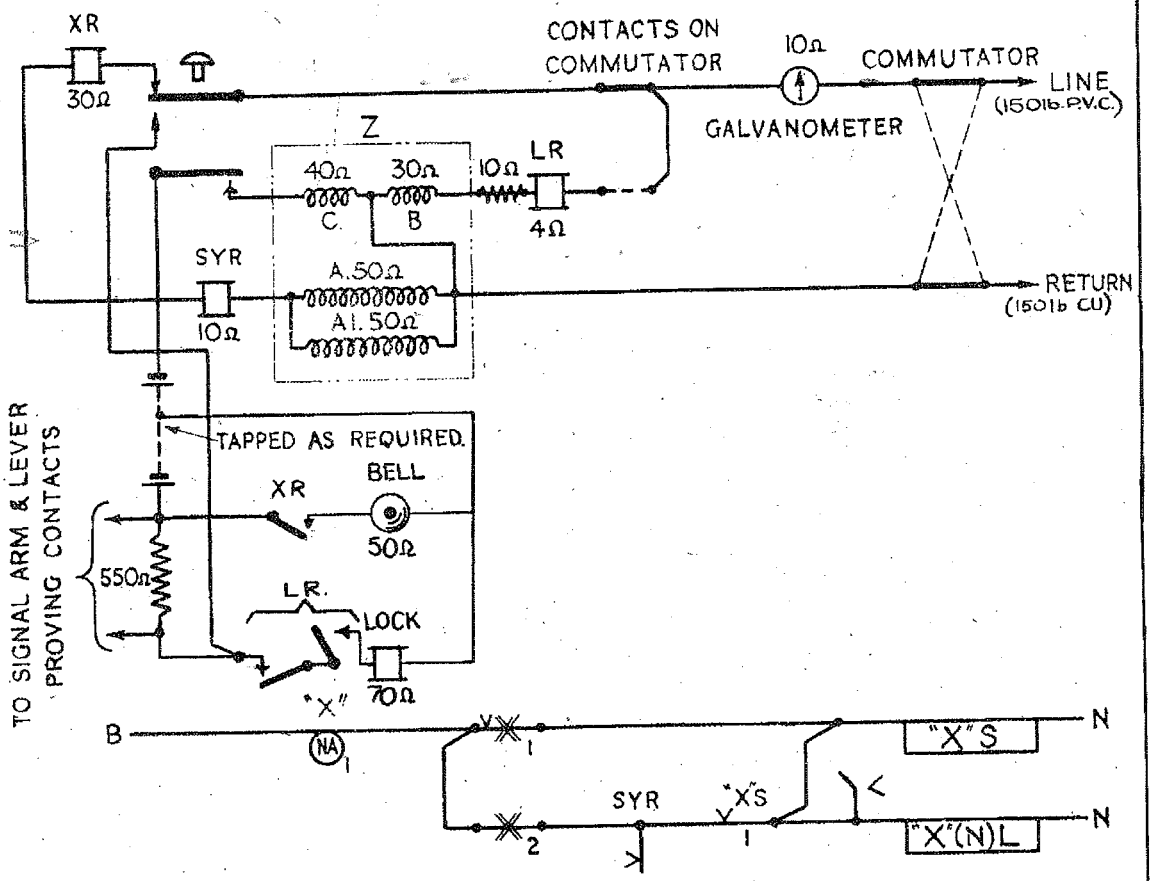

X_1 CONTACT MADE MOMENTARILY WHEN KEY TOKEN WITHDRAWN
X_2 " BROKEN " " " " INSERTED
Z INDICATOR. (FOR DETAILS SEE DRG. NO. SWD. 341).

TYPES OF RELAYS.

XR. TELEPHONE TYPE
LR. NEUTRAL POLAR REWOUND TO 4Ω
SYR. BRASS CASED POLAR REWOUND TO 10Ω

TYPE OF LINE WIRE INDICATED

FORMERLY S.W.D.4

DETAILS OF RELAYS ADDED.

TYER'S KEY TOKEN INSTRUMENT.

WITH SIGNAL PROVING & STARTING SIGNAL RELEASE EQUIPMENT.

L.N.E.R. SOUTHERN AREA.
SIGNAL & TELEGRAPH ENGINEER'S OFFICE
KINGS CROSS STATION, N.1.

DRAWN BY. T.W.E.	SWD. 342 A
TRACED BY. T.W.E.	
CHECKED BY.	DATE. 3. 8. 40.

STANDARD. WIRING. DIAGRAM.

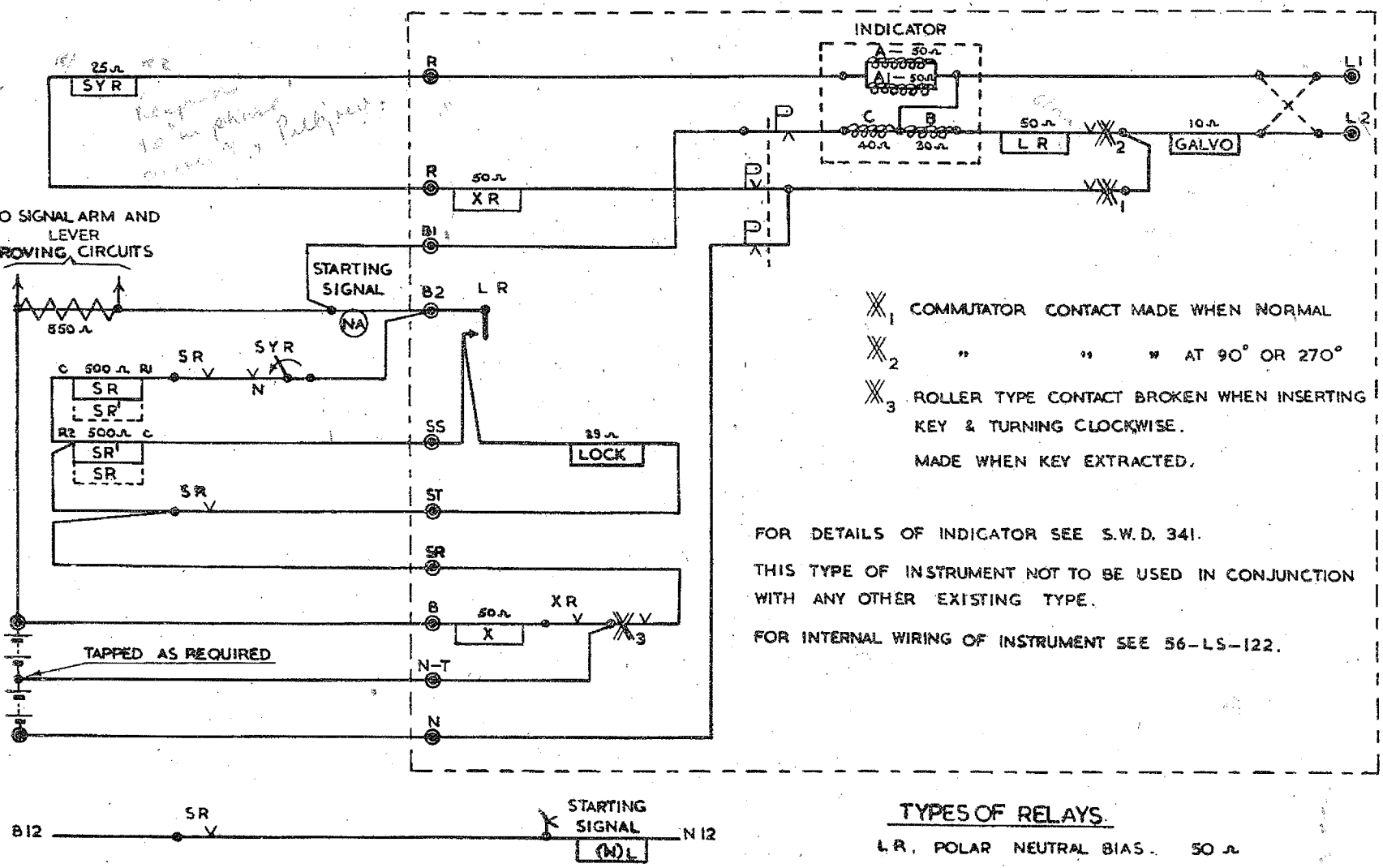

TYPES OF RELAYS.

L.R.	POLAR NEUTRAL BIAS.	50 Ω
SYR.	POLAR NORMAL BIAS.	25 Ω
SR.	LINE RELAY. (SEPARATE COILS)	500Ω + 500Ω

TYERS KEY TOKEN
INSTRUMENT TYPE 12A II
WITH SIGNAL PROVING AND STARTING
SIGNAL RELEASE.

B.R. ~ ER.
SIGNAL ENGRS: DEPT:
KINGS CROSS STATION.

DRAWN BY. GRB
TRACED BY. GRB
CHECKED BY. NM
DATE. 1·6·56

S.W.D. 343

FORMERLY S.W.D. 2.		
A	17-1 52	B.O.S

NOTE:- WHEN USED WITH SWD 342 ADDED

STANDARD WIRING DIAGRAM

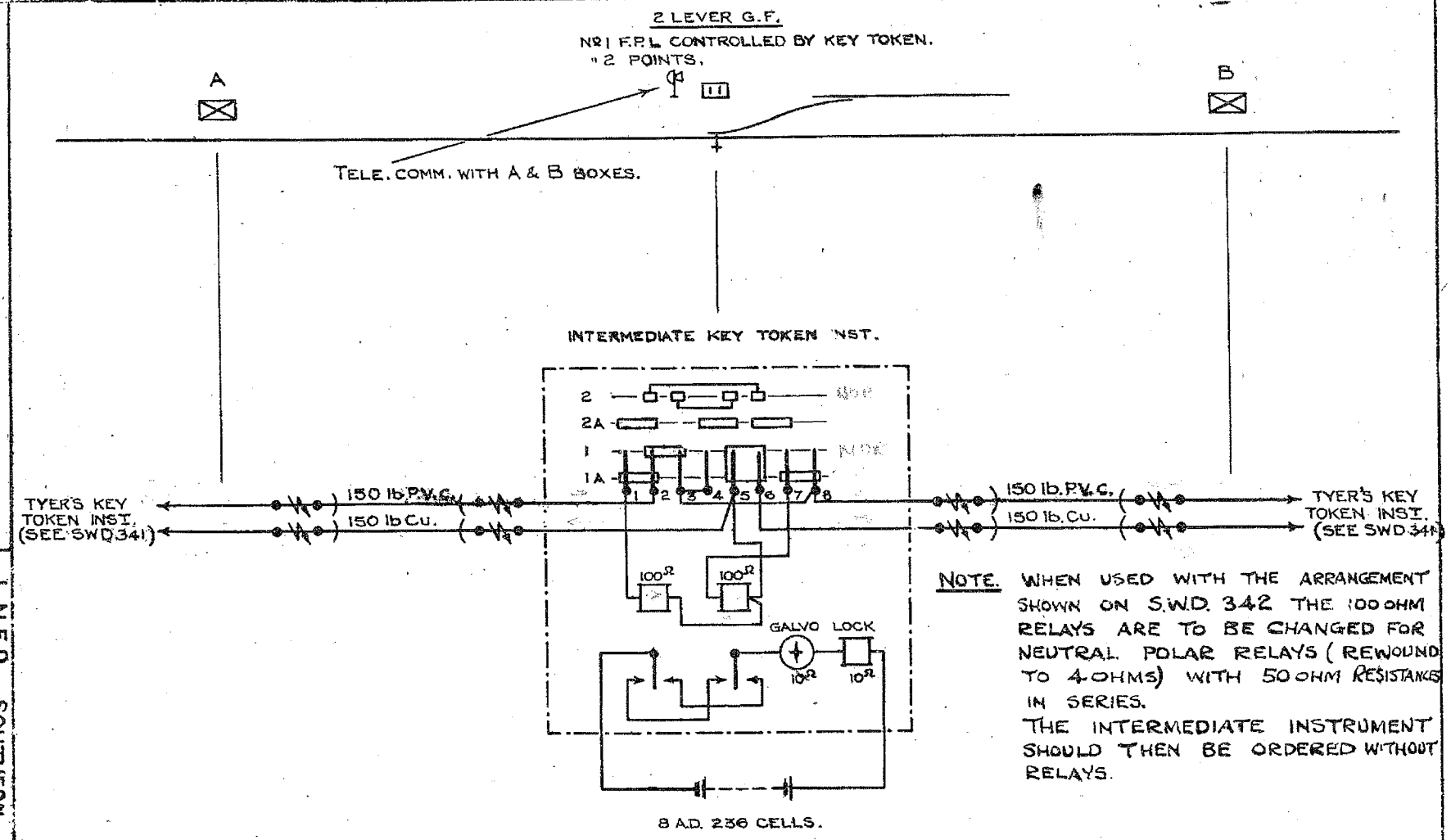

NOTE. WHEN USED WITH THE ARRANGEMENT SHOWN ON S.W.D. 342 THE 100 OHM RELAYS ARE TO BE CHANGED FOR NEUTRAL POLAR RELAYS (REWOUND TO 4 OHMS) WITH 50 OHM RESISTANCE IN SERIES.
THE INTERMEDIATE INSTRUMENT SHOULD THEN BE ORDERED WITHOUT RELAYS.

TO OBTAIN KEY SHUNTER TELEPHONES A & B SIGNAL BOXES & TURNS KEY THRO' 90°.
SIGNALMEN AT A & B PLUNGE SIMULTANEOUSLY ON MAIN TOKEN INSTS, & IF THESE ARE IN PHASE THE GALVO. OF THE INTER. TOKEN INST. WILL SHOW 'FREE' & THE LOCK BE RELEASED TO ENABLE THE SHUNTER TO TURN THE KEY THRO' A FURTHER 90° & WITHDRAW IT.

TYER'S INTERMEDIATE KEY TOKEN INSTRUMENT.

L.N.E.R. SOUTHERN AREA.
SIGNAL & TELEGRAPH ENGINEER'S OFFICE
KING'S CROSS STATION, N.1.

DRAWN BY F.M.F
TRACED BY F.M.F
CHECKED BY
DATE 2.6.47

SWD. 345A

STANDARD WIRING DIAGRAM

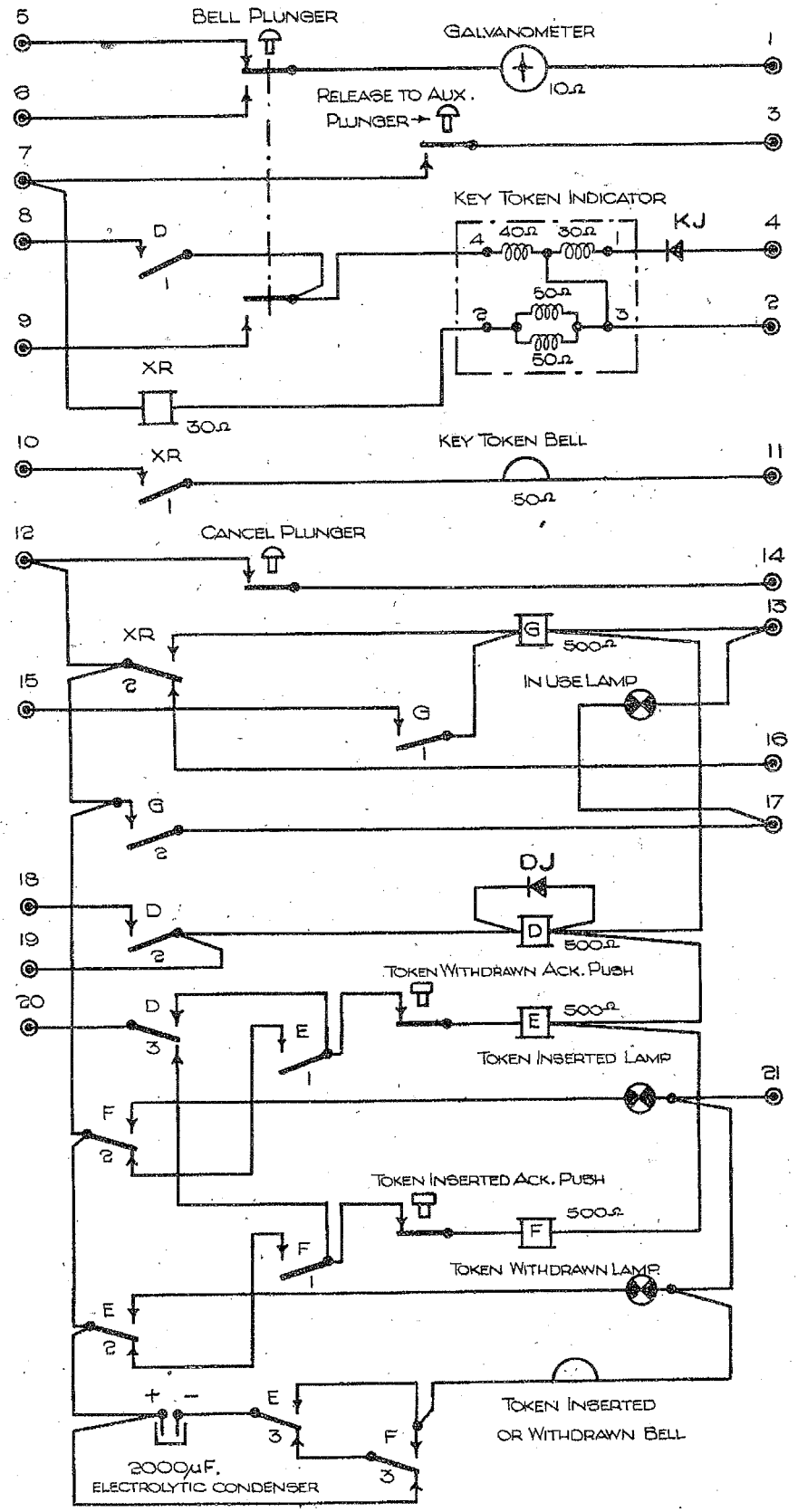

25.1.52	J.S.
FORMERLY S.W.D. 127	

KEY TOKEN PLUNGING UNIT

INTERNAL WIRING.

L.N.E.R. SOUTHERN AREA.
SIGNAL & TELEGRAPH ENGINEER'S OFFICE
KINGS CROSS STATION, N.1.

DRAWN BY J.R.McL.	SWD 346
TRACED BY O.M.S.	
CHECKED BY [illegible]	DATE 1.2.44

	25-1-52	JS	A	19-5-52	J.A.S

FORMERLY S.W.D. 50

TYPE OF LINE WIRE INDICATED.

STANDARD WIRING DIAGRAM

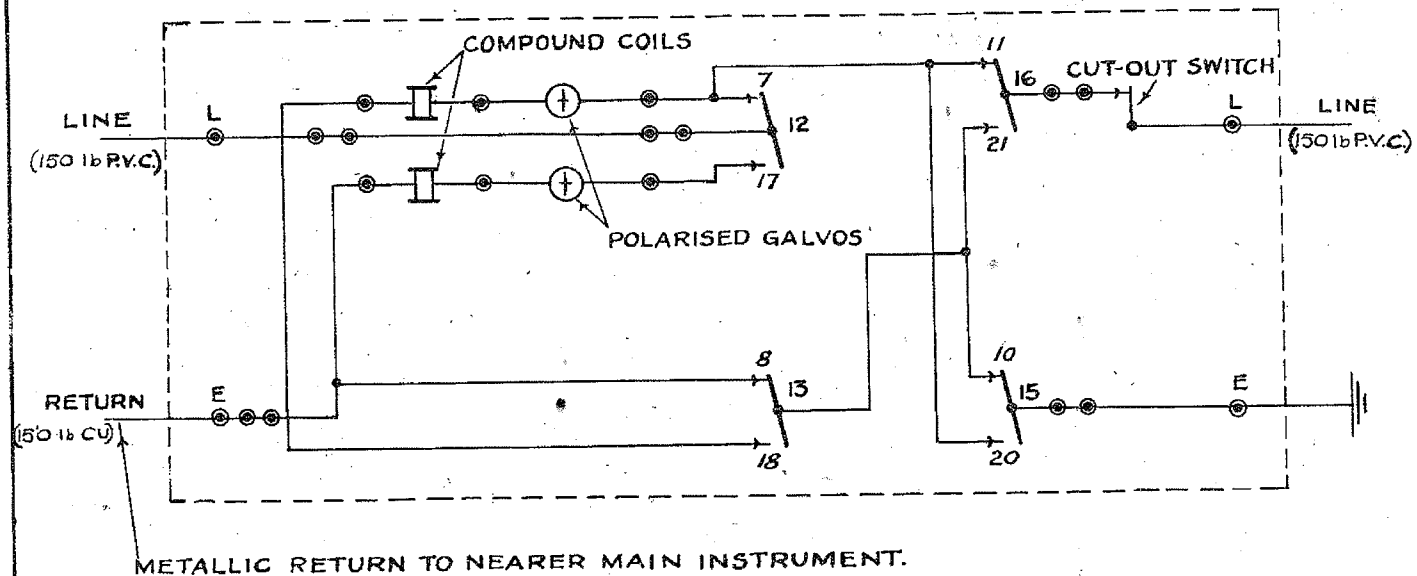

12, 13 } OPERATED WHEN STAFF LIFTED. RETURNS TO POSITION SHEWN WHEN STAFF WITHDRAWN.

15, 16 } OPERATED AUTOMATICALLY WHEN STAFF TAKEN OUT OR REPLACED.

L.N.E.R. SOUTHERN AREA.

ELEC. TRAIN STAFF INSTRUMENTS.

WIRING OF WEBB & THOMPSON LARGE TYPE SUBSIDIARY INSTRUMENT.

L.N.E.R. SOUTHERN AREA.
SIGNAL & TELEGRAPH ENGINEER'S OFFICE
KINGS CROSS STATION, N.1.

DRAWN BY S.W.S.

TRACED BY S.W.S.

CHECKED BY

DATE 10-2-42

SWD 360 A

ORIGINALLY DRAWING
Nº 44CES/A829/1A.

A	30-12-66	P.J.H.

REFERENCE TO NOTES 3 & 4 ADDED
RGPR DELETED.
RR

STANDARD WIRING DIAGRAM

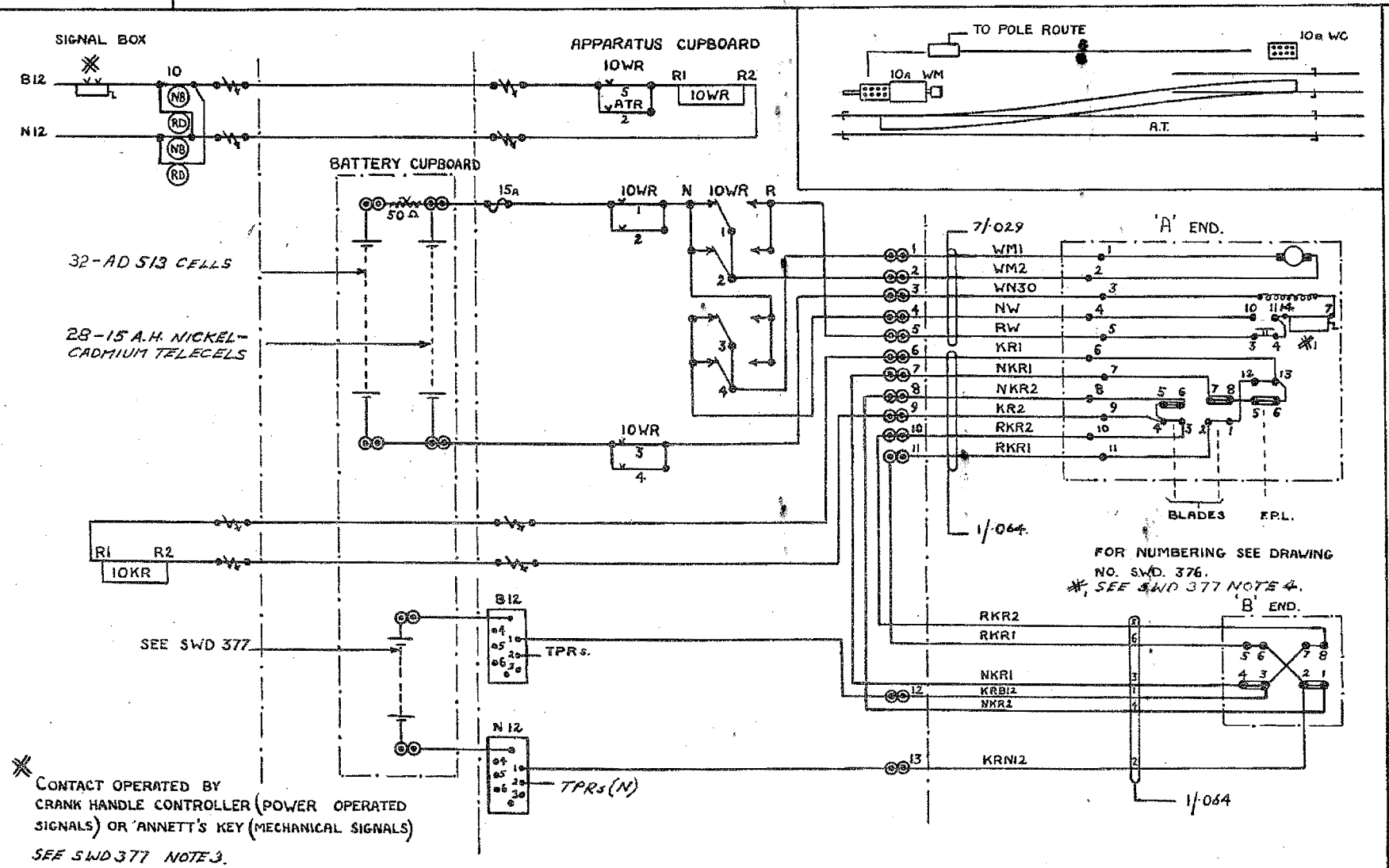

* CONTACT OPERATED BY CRANK HANDLE CONTROLLER (POWER OPERATED SIGNALS) OR 'ANNETT'S KEY (MECHANICAL SIGNALS)
SEE SWD 377 NOTE 3.

FOR NOTES SEE DRAWING No. S.W.D. 377.

LOW VOLTAGE POINT MACHINE
DOUBLE END DETECTION
LEFT HAND SWITCH CLOSED
MACHINE TYPE S.G.E. HB741/2.

RAILWAY EXECUTIVE - EASTERN REGION.
SIGNAL & TELECOMMUNICATIONS ENGR. OFFICE.
KINGS CROSS STATION N1.

DRAWN BY V.C.
TRACED BY Y.R.
CHECKED BY N.M.
DATE 18. 2. 53.

SWD 371A

ORIGINALLY DRAWING NO. 44CES/A829/2

A	30-12-66	P.J.H.

REFERENCE TO NOTES 3 & 4 ADDED
RGPR DELETED.
RR

STANDARD WIRING DIAGRAM

LOW VOLTAGE POINT MACHINE
DOUBLE END DETECTION
RIGHT HAND SWITCH CLOSED
MACHINE TYPE S.G.E. HB741/2.

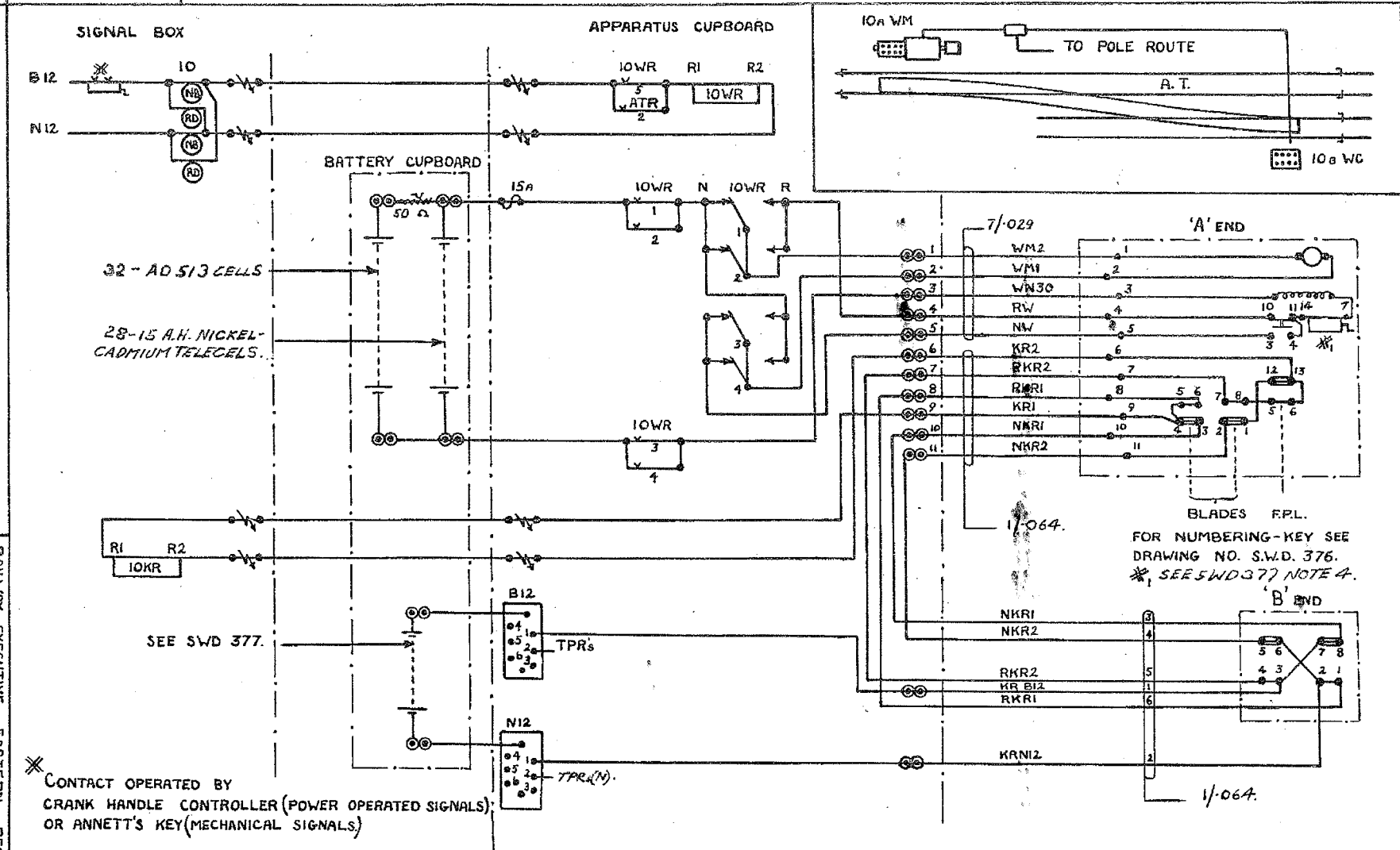

CONTACT OPERATED BY CRANK HANDLE CONTROLLER (POWER OPERATED SIGNALS) OR ANNETT'S KEY (MECHANICAL SIGNALS)

SEE SWD 377 NOTE 3

FOR NOTES SEE DRAWING No. SWD. 377.

RAILWAY EXECUTIVE - EASTERN REGION.
SIGNAL & TELECOMMUNICATIONS ENGR. OFFICE.
KINGS CROSS STATION N1.

DRAWN BY V.C.
TRACED BY Y.R.
CHECKED BY N.M.
DATE 18. 2. 53.

SWD 372 A

ORIGINALLY DRAWING
Nº 44CES/A829/3.

A	30-12-66.	P.G.H.

REFERENCE TO NOTES 3 & 4 ADDED.
RGPR DELETED
RR

STANDARD WIRING DIAGRAM

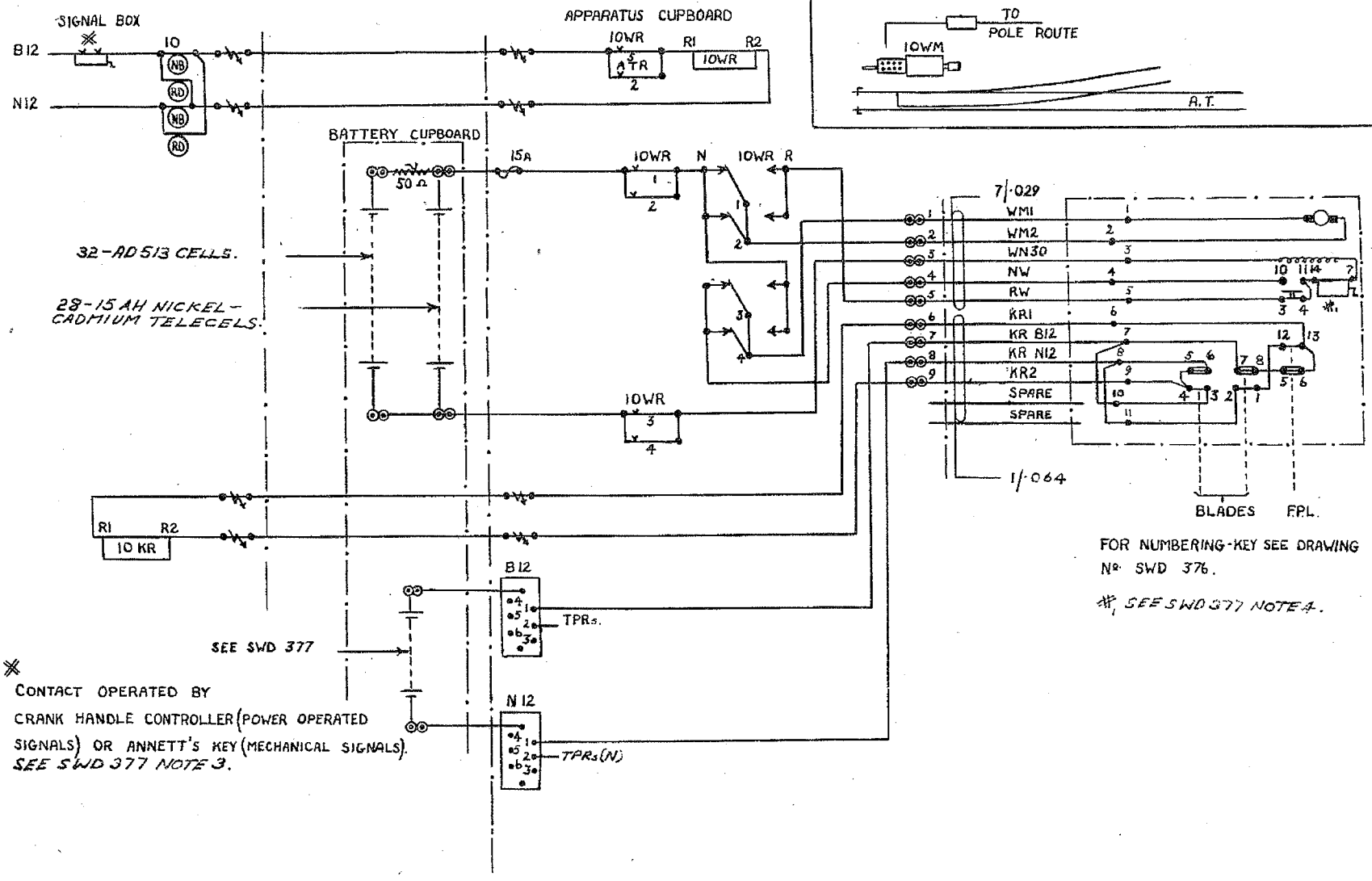

FOR NUMBERING-KEY SEE DRAWING Nº SWD 376.

✱, SEE SWD 377 NOTE 4.

✱ CONTACT OPERATED BY CRANK HANDLE CONTROLLER (POWER OPERATED SIGNALS) OR ANNETT'S KEY (MECHANICAL SIGNALS). SEE SWD 377 NOTE 3.

FOR NOTES SEE DRAWING No. SWD. 377.

LOW VOLTAGE POINT MACHINE
SINGLE END DETECTION
LEFT HAND SWITCH CLOSED
MACHINE TYPE S.G.E. HB 741/2.

RAILWAY EXECUTIVE - EASTERN REGION
SIGNAL & TELECOMMUNICATIONS ENGR OFFICE.
KINGS CROSS STATION N1.

DRAWN BY V.C.
TRACED BY Y.R.
CHECKED BY N.M.

SWD 373 A

DATE 16.2.53.

ORIGINALLY DRAWING
Nº 44CES/A829/4

A	30-12-66	P.J.H.

REFERENCE TO NOTES 3 & 4 ADDED. RGRR DELETED. RR

STANDARD WIRING DIAGRAM

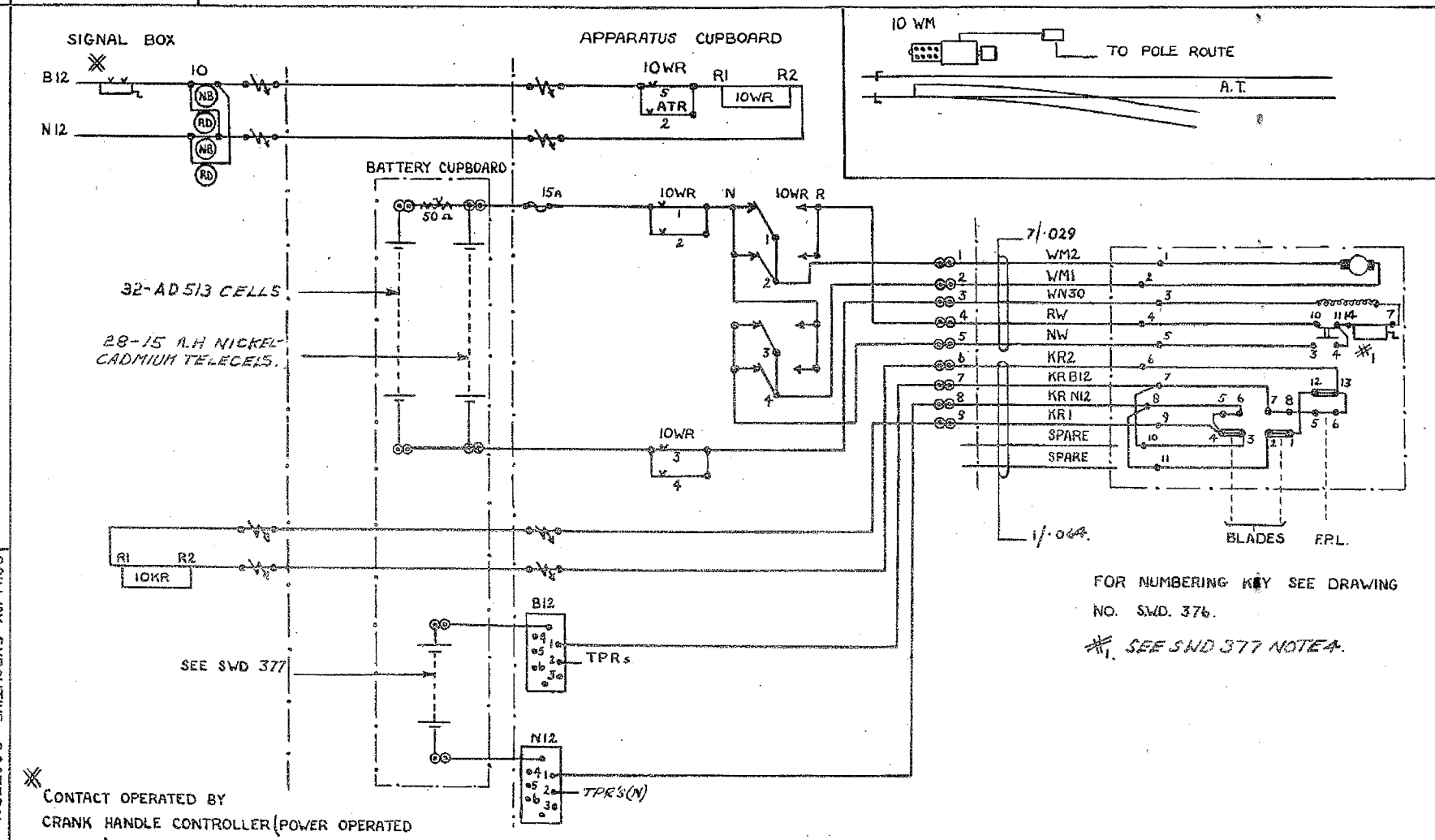

FOR NUMBERING KEY SEE DRAWING NO. SWD. 376.

*1. SEE SWD 377 NOTE 4.

* CONTACT OPERATED BY CRANK HANDLE CONTROLLER (POWER OPERATED SIGNALS) OR ANNETT'S KEY (MECHANICAL SIGNALS). SEE SWD 377 NOTE 3.

FOR NOTES SEE DRAWING No. SWD. 377.

LOW VOLTAGE POINT MACHINE
SINGLE END DETECTION
RIGHT HAND SWITCH CLOSED
MACHINE TYPE S.G.E. HB 741/2.

RAILWAY EXECUTIVE - EASTERN REGION
SIGNAL & TELECOMMUNICATIONS ENGR. OFFICE.
KINGS CROSS STATION N1.

DRAWN BY V.C.
TRACED BY Y.R.
CHECKED BY N.M.
DATE 17. 2. 53.

SWD 374 A

ORIGINALLY DRAWING NO. 44 CES/A829/5.

A	30-12-66.	R.G.H

REFERENCE TO NOTES 3 & 4 ADDED RGPR DELETED. RR

STANDARD WIRING DIAGRAM

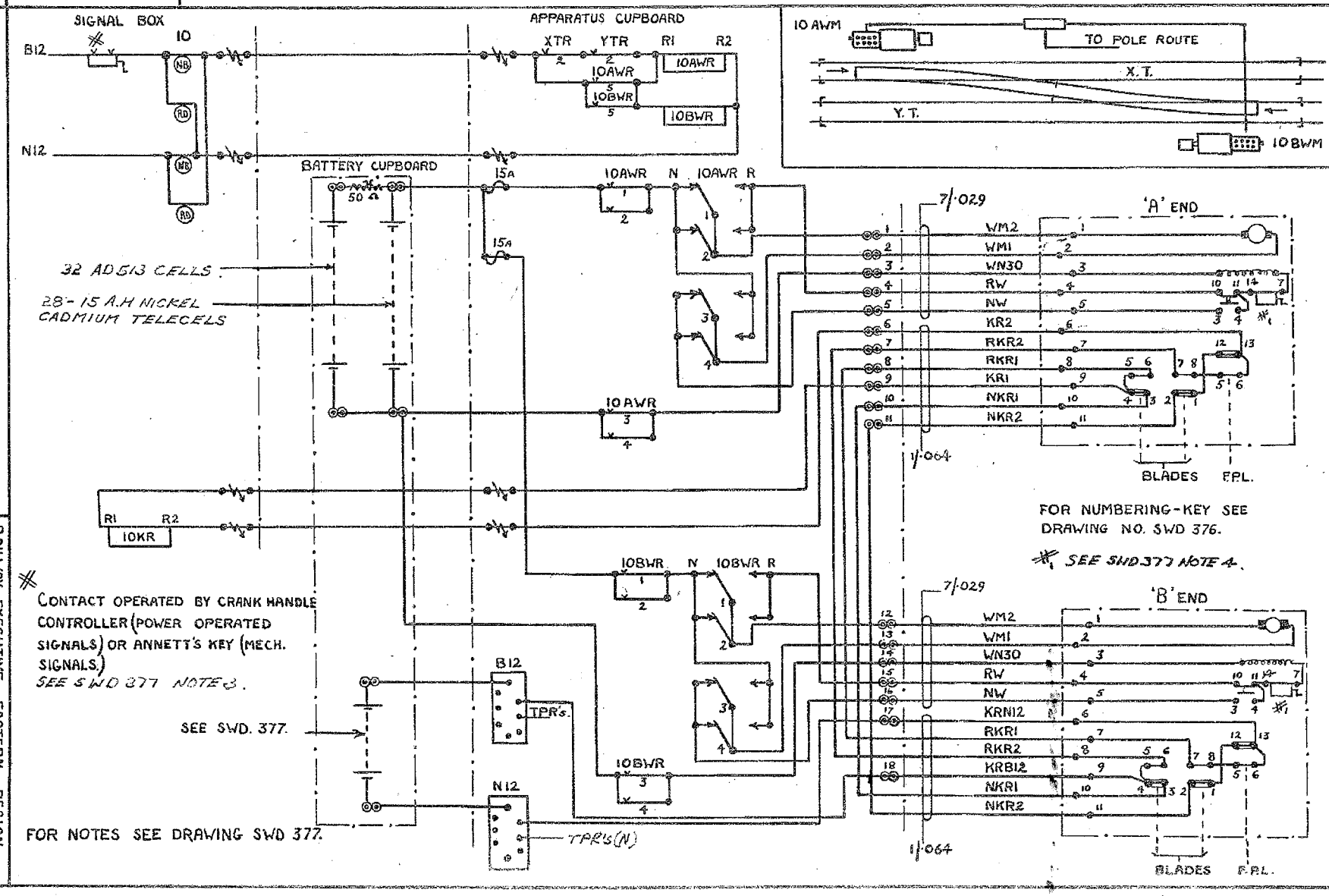

LOW VOLTAGE POINT MACHINE

DOUBLE END DETECTION

FACING CROSSOVER RIGHT HAND

SWITCH CLOSED

MACHINE TYPE SGE HB 74 1/2.

RAILWAY EXECUTIVE - EASTERN REGION.

SIGNAL & TELECOMMUNICATIONS ENGR. OFFICE.

KINGS CROSS STATION N1.

DRAWN BY V.C.

TRACED BY Y.R.

CHECKED BY N.M.

DATE 19. 2. 53.

SWD 375 A

ORIGINALLY DRAWING NO. 44CES/A829/6.

A	30-12-66	P.H.

NOTE 2 AMENDED TO INCLUDE REFERENCE TO MANUALLY RESTORED CONTACT. RR

STANDARD WIRING DIAGRAM

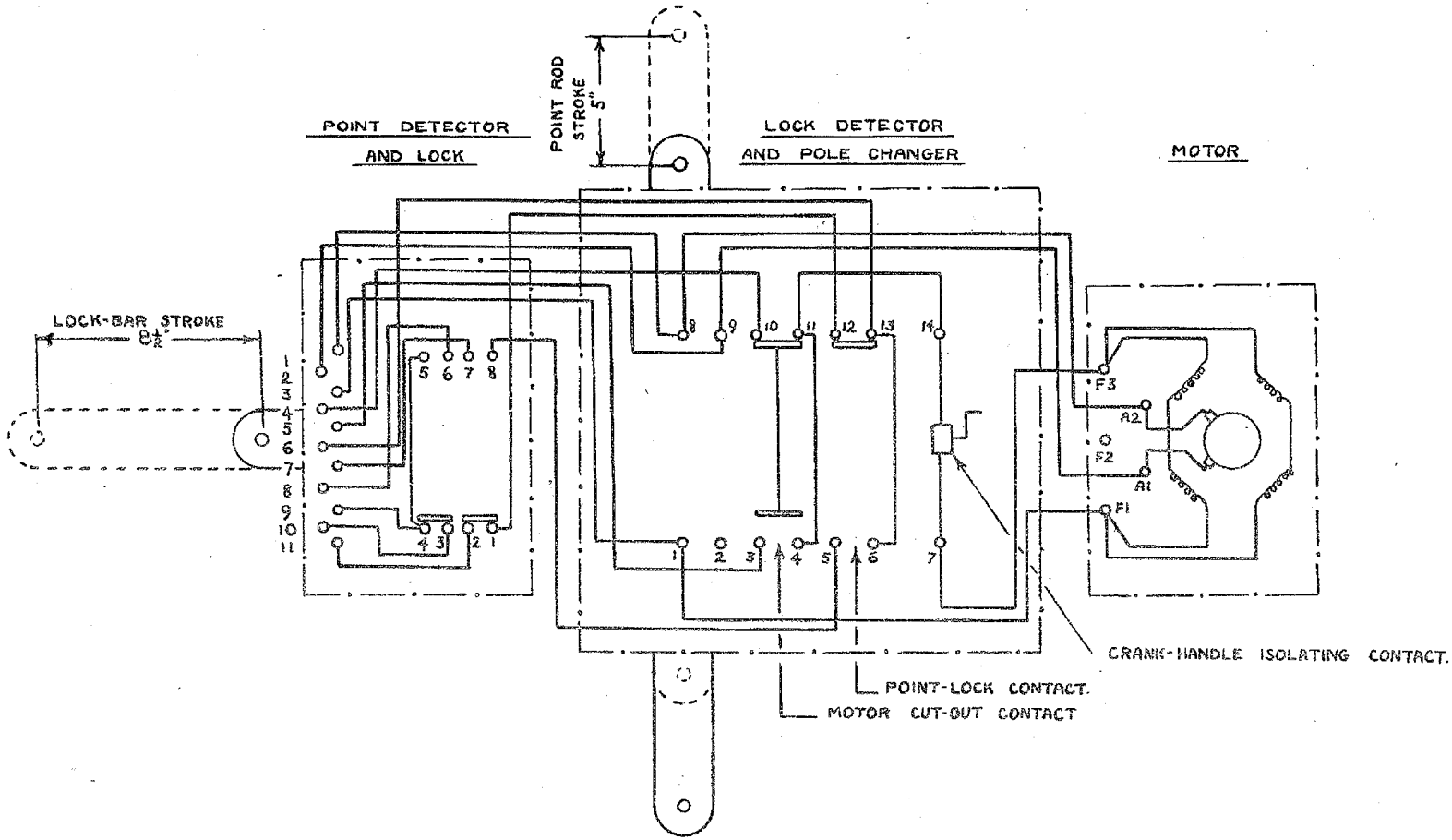

NOTE:- 1. MOTOR CUT-OUT CONTACTS BOTH MAKE IMMEDIATELY ON COMMENCEMENT OF STROKE AND CHANGEOVER AT END OF STROKE.

2. ISOLATING CONTACT TO BE STRAPPED WHERE INDIVIDUAL CRANK-HANDLE IS USED EXEPT WHEN MANUALLY RESTORED CONTACT IS FITTED IN MACHINE.

TYPICAL OPERATING CHARACTERISTICS

	SINGLE ENDED	DOUBLE ENDED.
VOLTS	30	30
AMPS.	5·2 MAX. 4·5 AV.	5·5 MAX. 4·5 AV.
TIME	4·2 SECS.	5·5 SECS.

LOW VOLTAGE POINT MACHINE

INTERNAL WIRING

MACHINE TYPE SGE HB741/2.

RAILWAY EXECUTIVE - EASTERN REGION.
SIGNAL & TELECOMMUNICATIONS ENGR OFFICE.
KINGS CROSS STATION N1.

DRAWN BY V.C.
TRACED BY Y.R.
CHECKED BY N.M.
DATE 19.2.53.

SWD. 376A

ORIGINALLY DRAWING	A	5.4.54.	W.B.	B.	30-12-66	P.G.H.
No. 44CES/A829/7A.	NOTE 9 & REFERENCE IN BRACKETS TO NOTE 6 ADDED. N.M.			NOTES 3 & 4 REWRITTEN. REF TO RGPR DELETED. REF TO ISOLATING CONTACT ADDED. NOTE 10 ADDED RR		

NOTES:-

1. WHEN POWER SUPPLY AVAILABLE 32-AD 613. CELLS TO BE REPLACED BY DUAL RANGE RECTIFIER OUTPUT 50 mA TO 3·0 AMP.

   60 OHM. LIMITING RESISTANCE AND INDICATION BATTERY TO BE OMITTED (DRG Nº SWD 378)

2. IF APPARATUS CUPBOARD TERMINAL NUMBERS CANNOT BE ARRANGED AS SHEWN, THEN NUMBERS BEGINNING 11 OR 21 ETC. TO BE USED.

3. ISOLATING CONTACT NOT REQUIRED IN WR CIRCUIT IF POINT MACHINE HAS MANUALLY RESTORED CRANK HANDLE ISOLATING CONTACT.

4. ISOLATING CONTACT IN POINT MACHINE TO BE STRAPPED WHERE INDIVIDUAL CRANK HANDLE IS USED EXCEPT WHEN MANUALLY RESTORED CONTACT IS FITTED IN MACHINE.

5. 'A' END DENOTES POINTS NEARER SIGNAL BOX.

6. WHEN MACHINE IS INSTALLED AT 'B' END. (APPLICABLE TO HB741/2 MACHINE ONLY.)

AT FACING END ('B' END)	BETWEEN ENDS	AT TRAILING END. ('A' END)
KR1 BECOMES KR B12	RKR1 BECOMES RKR2	KR B12 BECOMES KR1.
KR2 " KR N12	RKR2 " RKR1	KR N12 " KR2

7. KR TO BE FED FROM 'B' END IN ALL CASES.

8. INDICATION BATTERY TO BE COMPOSED OF 10-DS1 CELLS. WHEN POWER SUPPLY AVAILABLE SEE SWD 378.

9. IF MACHINE TYPE HB542 OR HB742 IS USED FOR SINGLE ENDED POINTS, SPLIT LOCK SLIDES TO BE RIVETTED TOGETHER.

10. MACHINE TYPE HB241 FITTED WITH EXTERNAL PLUNGER FOR RESETTING ISOLATING CONTACT, LUGS FOR B.R. STANDARD RODS & PRE-CUT SPLIT ADJUSTABLE LOCK SLIDES.

LOW VOLTAGE POINT MACHINE

NOTE REFERENCES APPLICABLE

TO DRAWINGS NOS. SWD. 371-5, 379, 380-2

RAILWAY EXECUTIVE - EASTERN REGION.
SIGNAL & TELECOMMUNICATIONS ENGR. OFFICE.
KINGS CROSS STATION N1.

DRAWN BY V.C.
TRACED BY Y.R.
CHECKED BY N.M.

SWD. 377B

DATE 23. 2. 53.

ORIGINALLY DRAWING
No. 44CES/A829/8.

A	30-12-66	PGH

BATTERY CHANGED FROM 10 TO 15 AH CELLS. GPR FEED DELETED. RECTIFIER DETAIL AMENDED

STANDARD WIRING DIAGRAM

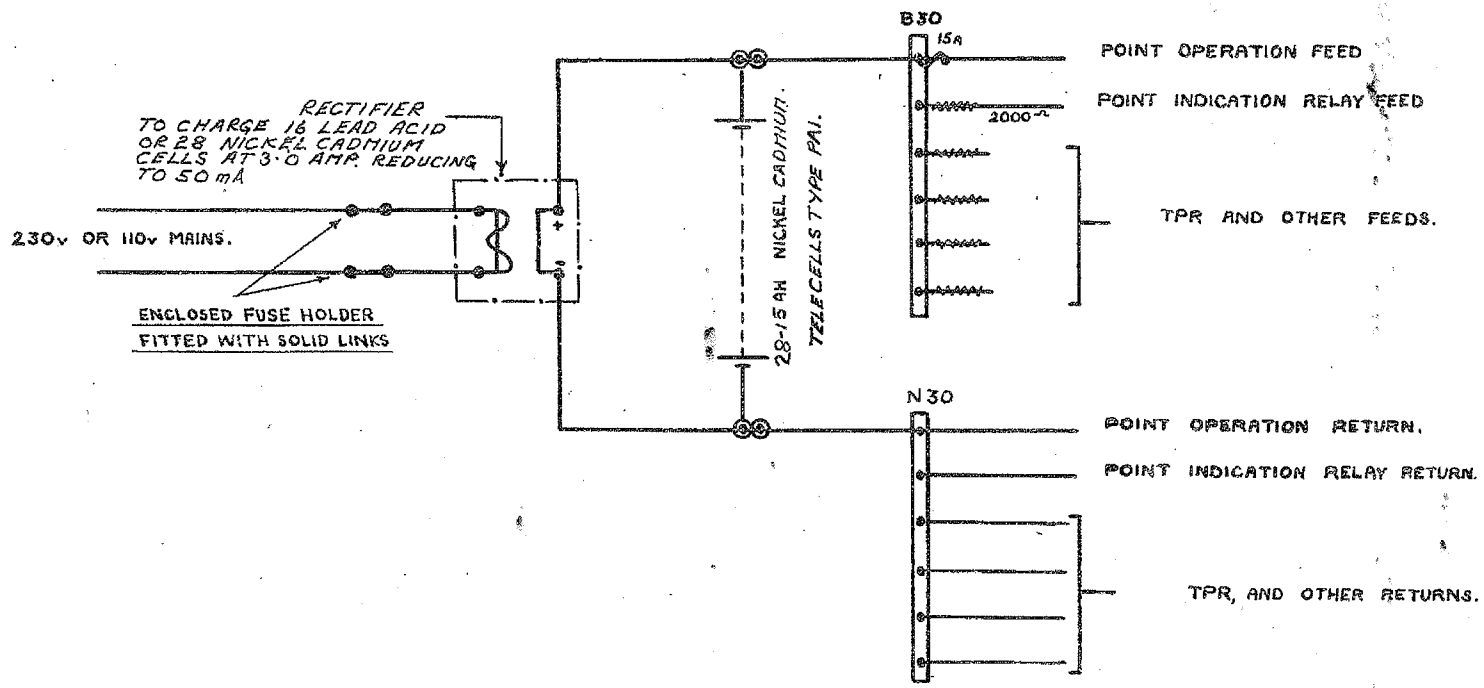

LOW VOLTAGE POINT MACHINE
COMMON BATTERY WHEN
POWER SUPPLY AVAILABLE

RAILWAY EXECUTIVE EASTERN REGION.
SIGNAL & TELECOMMUNICATIONS ENGR OFFICE.
KINGS CROSS STATION N1.

DRAWN BY V.C.
TRACED BY Y.R.
CHECKED BY N.M.

SWD. 378A

DATE 23. 2. 53.

A	27-9-63	B.	30-12-66
AMENDED TO PROVE CROSS PROTECTION WIRES INTACT.		REFERENCE TO NOTES 3 & 4 ADDED. RGPR AND CROSS PROTECTION DELETED. RR	

STANDARD WIRING DIAGRAM.

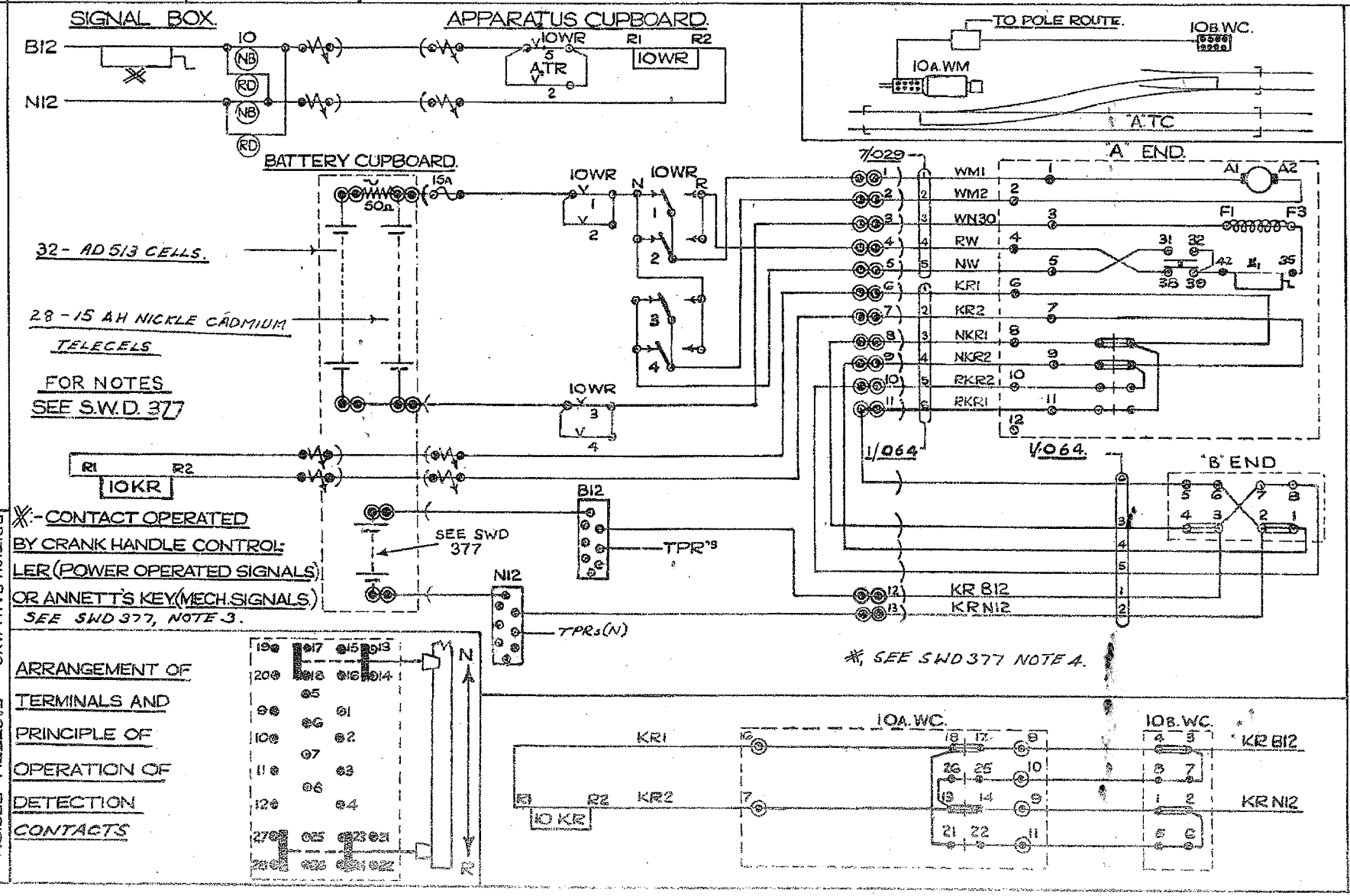

※:- CONTACT OPERATED BY CRANK HANDLE CONTROLLER (POWER OPERATED SIGNALS) OR ANNETT'S KEY (MECH. SIGNALS) SEE SWD 377, NOTE 3.

ARRANGEMENT OF TERMINALS AND PRINCIPLE OF OPERATION OF DETECTION CONTACTS

LOW VOLTAGE POINT MACHINE
DOUBLE END DETECTION
LEFT HAND SWITCH CLOSED
MACHINE TYPES S.G.E. HB 541/2. & HB 241.

BRITISH RAILWAYS — EASTERN REGION.
SIGNAL & TELECOMMUNICATIONS ENG'S OFFICE, KINGS CROSS STATION, LONDON, N.1.

DRAWN BY R.R.
TRACED BY R.S.T.
CHECKED BY N.M.
DATE 31.3.54.

SWD 377

A	27-9-63		B	30-12-66

AMENDED TO PROVE CROSS PROTECTION WIRES INTACT.

REFERENCE TO NOTES 3 & 4 ADDED. RGPR & CROSS PROTECTION DELETED. RR

STANDARD WIRING DIAGRAM.

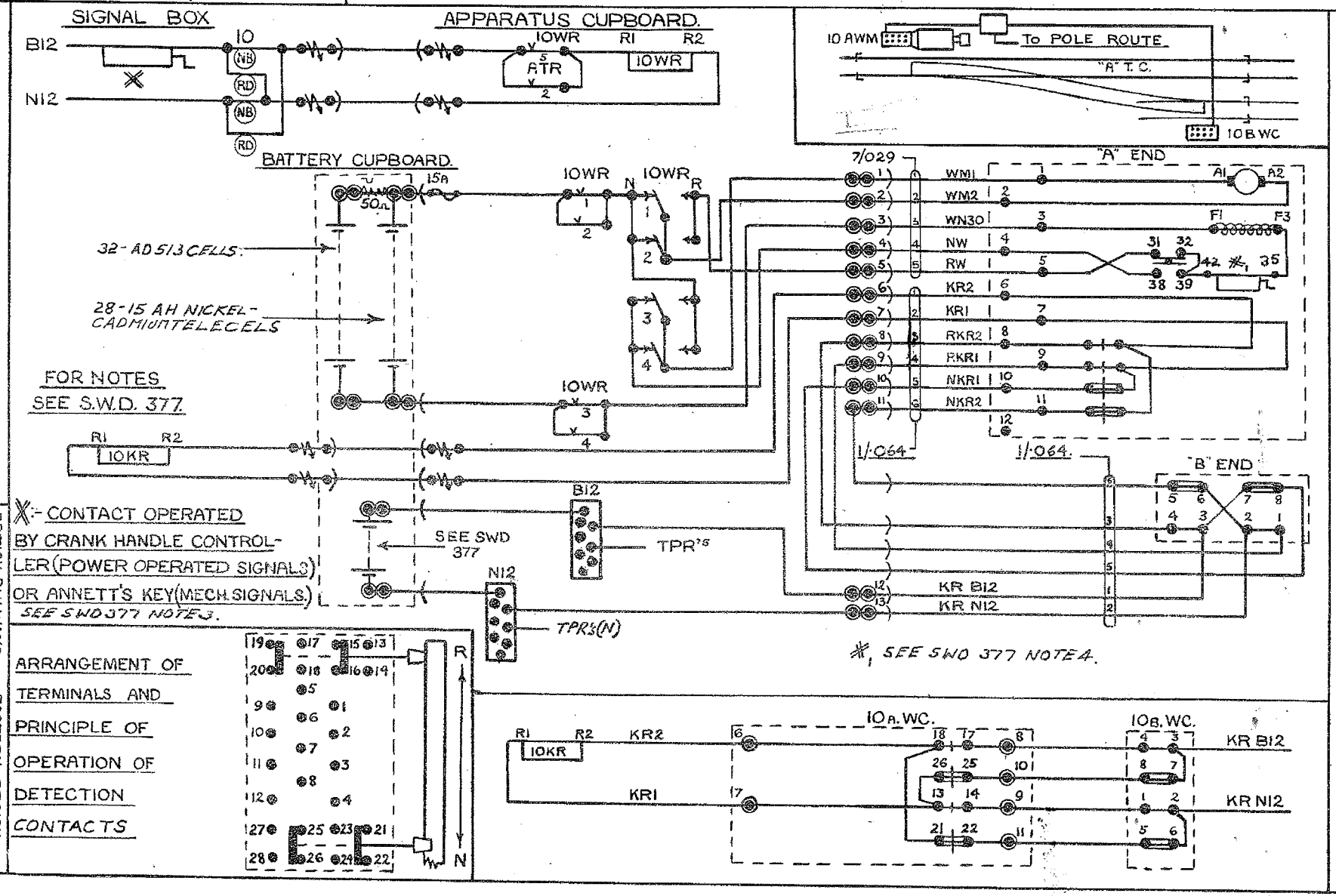

LOW VOLTAGE POINT MACHINE
DOUBLE END DETECTION
RIGHT HAND SWITCH CLOSED
MACHINE TYPES S.G.E. HB 541/2. & HB 241.

BRITISH RAILWAYS — EASTERN REGION
SIGNAL & TELECOMMUNICATIONS ENGR. OFFICE
KINGS CROSS STATION, LONDON, N.1.

DRAWN BY R.R.
TRACED BY Y.R.
CHECKED BY N.M.
DATE 31.3.54.

SWD 380 B

A	27-9-63	B&P	B	30-12-66	PJH.
AMENDED TO PROVE CROSS PROTECTION WIRES INTACT.			REFERENCE TO NOTES 3 & 4 ADDED. RGPR AND CROSS PROTECTION DELETED. RR		

STANDARD WIRING DIAGRAM

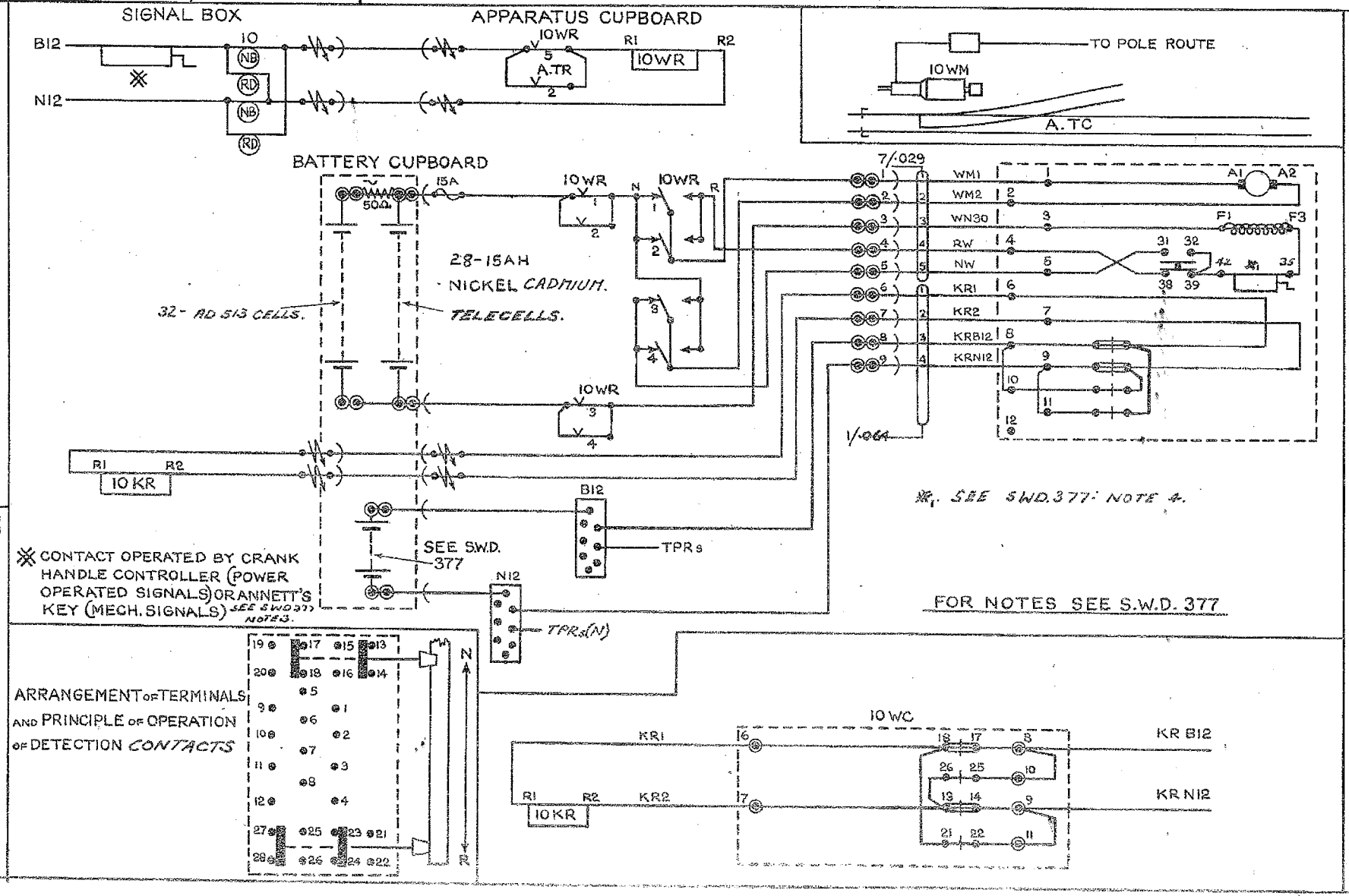

LOW VOLTAGE POINT MACHINE
SINGLE END DETECTION
LEFT HAND SWITCH CLOSED
MACHINE TYPES S.G.E. HB 541/2. & HB 241.

BRITISH RAILWAYS — EASTERN REGION
SIGNAL & TELECOMMUNICATIONS ENGR
KING'S CROSS STATION, N.1.

DRAWN BY W.B.
TRACED BY W.B.
CHECKED BY M.M.

SWD 381B

DATE 31.3.54.

A	27-9-63	BSP	B	30-12-66	P.J.H.
AMENDED TO PROVE CROSS PROTECTION WIRES INTACT.			REFERENCE TO NOTES 3 & 4 ADDED. RGPR & CROSS PROTECTION DELETED RR		

STANDARD WIRING DIAGRAM

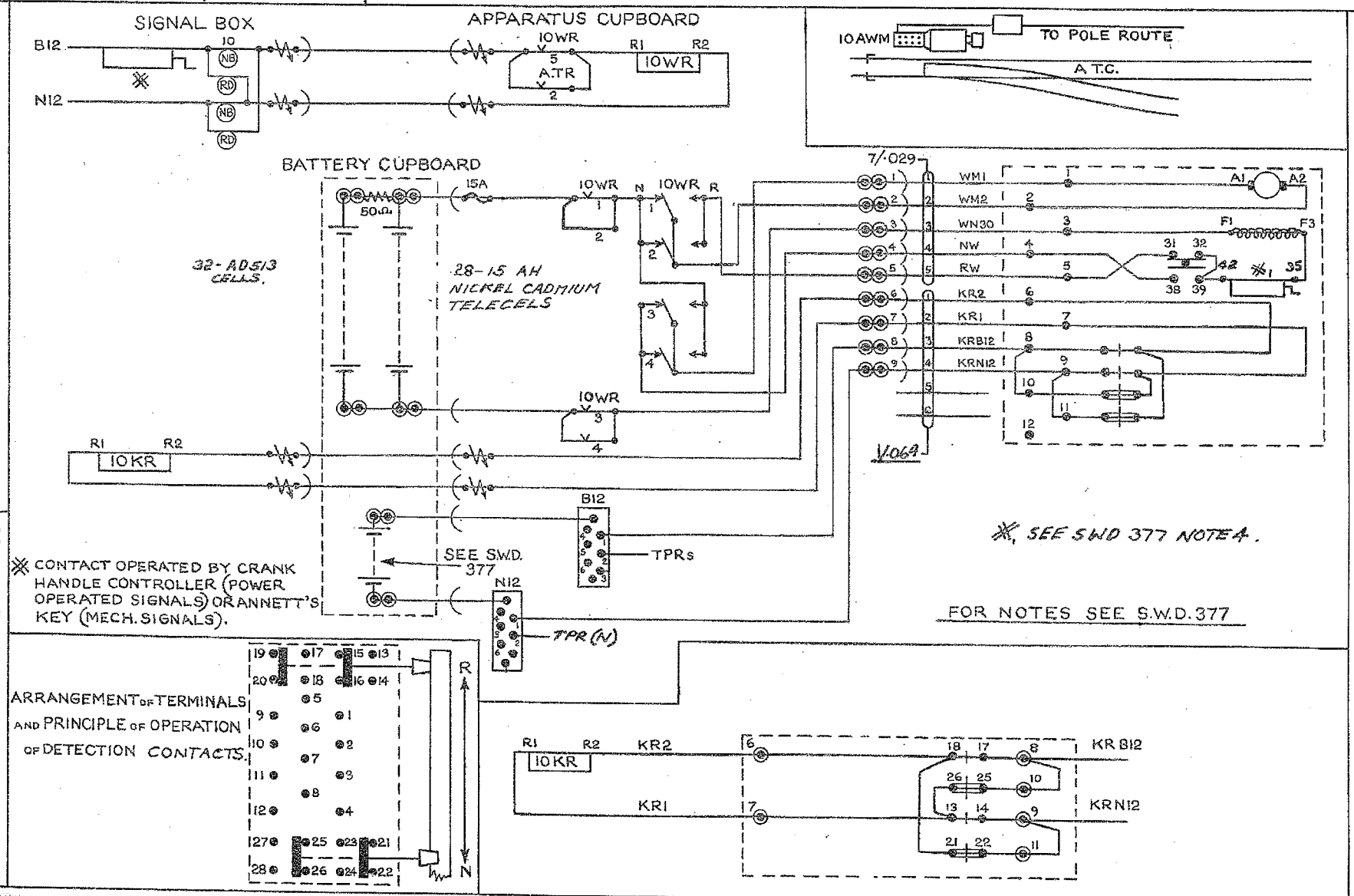

LOW VOLTAGE POINT MACHINE

SINGLE END DETECTION

RIGHT HAND SWITCH CLOSED

MACHINE TYPES S.G.E. HB 54/2 & HB 241.

BRITISH RAILWAYS — EASTERN REGION
SIGNAL & TELECOMMUNICATIONS ENGINR
KING'S CROSS STATION, N.1.

DRAWN BY W.B.
TRACED BY W.B.
CHECKED BY N.M.
DATE 31.3.54

SWD 382 B

14.2.52 | J.S.

FORMERLY SWD27

STANDARD WIRING DIAGRAM

STANDARD WIRING OF 110 VOLT SEPARATE TYPE POINT MACHINE OPERATED BY HAND GENERATOR

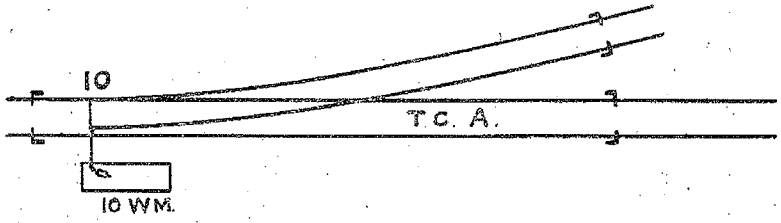

RIGHT HAND LAYOUT WITH LEFT HAND TONGUE CLOSED

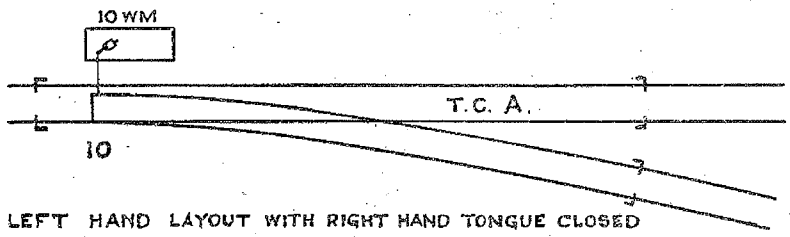

LEFT HAND LAYOUT WITH RIGHT HAND TONGUE CLOSED

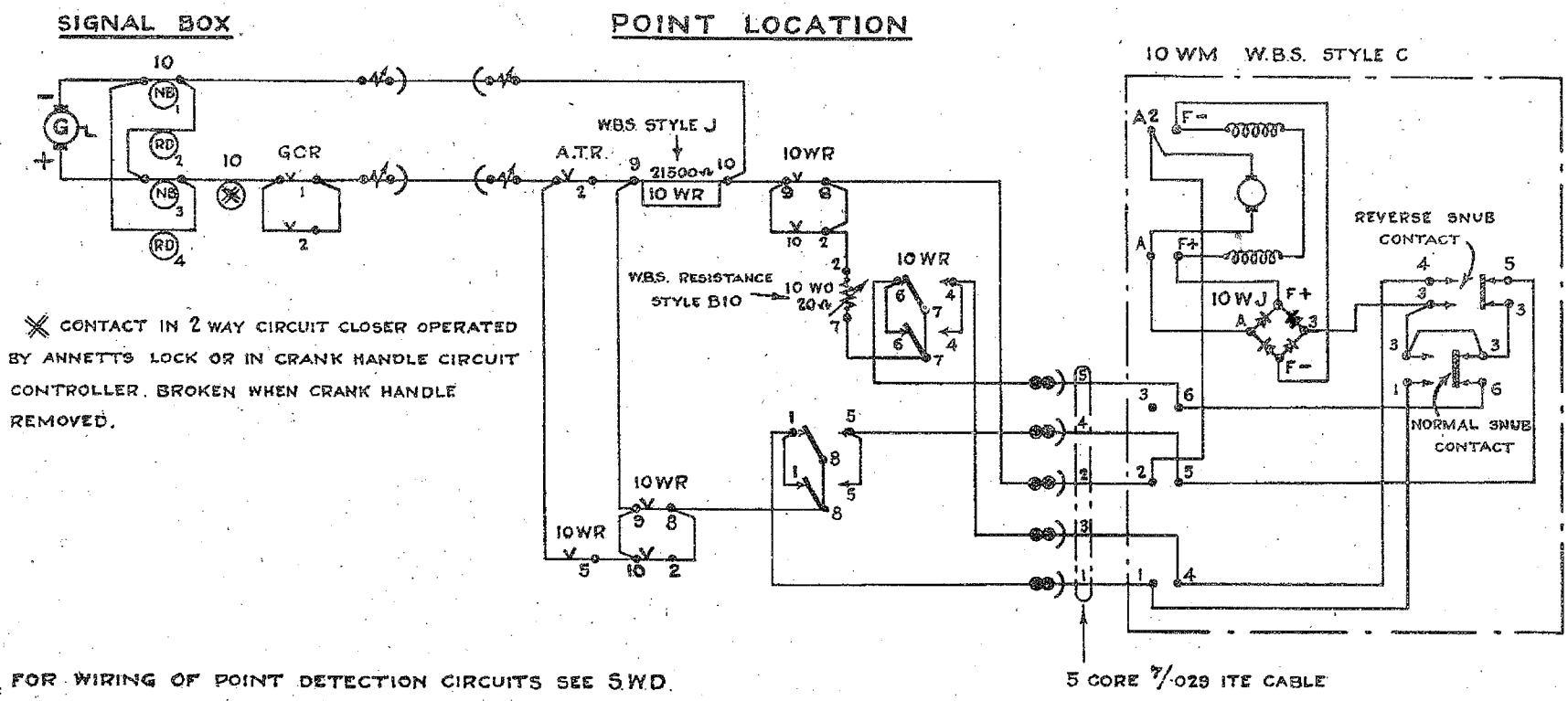

✕ CONTACT IN 2 WAY CIRCUIT CLOSER OPERATED BY ANNETTS LOCK OR IN CRANK HANDLE CIRCUIT CONTROLLER. BROKEN WHEN CRANK HANDLE REMOVED.

FOR WIRING OF POINT DETECTION CIRCUITS SEE S.W.D.

L.N.E.R. SOUTHERN AREA.
SIGNAL & TELEGRAPH ENGINEERS OFFICE
KINGS CROSS STATION N.1.

DRAWN BY
TRACED BY G.E.P.
CHECKED BY
DATE 22-4-53

SWD 385

A	16.7.43	14·2·52	J.S.

Contact Nos. on 10WR altered.

FORMERLY SWD 28

STANDARD WIRING OF 110 VOLT SEPARATE TYPE POINT MACHINE OPERATED BY HAND GENERATOR

W.B.S. STYLE C MACHINE

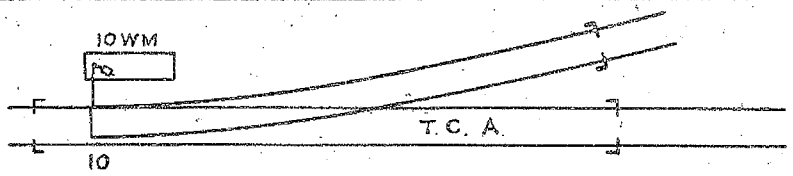

LEFT HAND LAYOUT WITH LEFT HAND TONGUE CLOSED

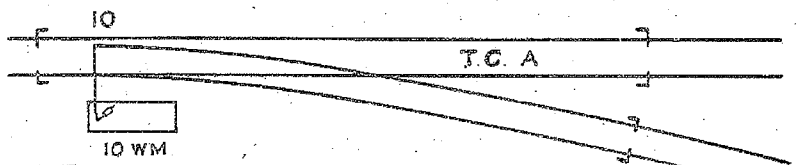

RIGHT HAND LAYOUT WITH RIGHT HAND TONGUE CLOSED

SIGNAL BOX

POINT LOCATION

10 WM W.B.S. STYLE C

W.B.S. STYLE J.

W.B.S. RESISTANCE STYLE B10

NORMAL SNUB CONTACT

REVERSE SNUB CONTACT

5 CORE 7/·029 ITE CABLE

✕ CONTACT IN 2 WAY CIRCUIT CLOSER OPERATED BY ANNETTS LOCK OR IN CRANK HANDLE CIRCUIT CONTROLLER BROKEN WHEN CRANK HANDLE REMOVED.

FOR WIRING OF POINT DETECTION CIRCUITS SEE SWD

L.N.E.R. SOUTHERN AREA.

TELEGRAPH ENGINEER'S OFFICE

KING'S CROSS STATION N.1.

DRAWN BY

TRACED BY C.E.P.

CHECKED

DATE 22-4-

SWD 386

STANDARD WIRING DIAGRAM

8 2 · 52 J.S. A 19·5·52 J.A.S
FORMERLY S.W.D. 80 TYPE Nº OF MACHINE
AMENDED.

STANDARD WIRING DIAGRAM

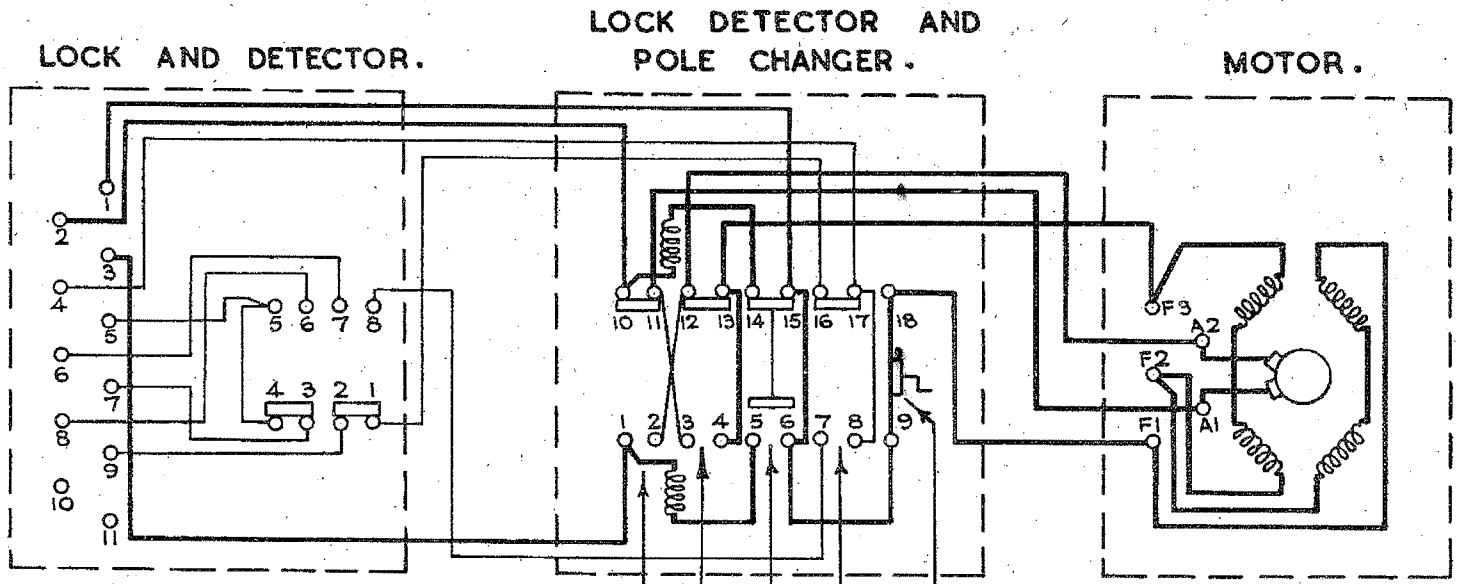

NOTES:-

1. SOLENOID SWITCH CONTACTS BOTH MAKE IMMEDIATELY ON COMMENCEMENT OF STROKE AND CHANGE OVER AT END OF STROKE.
2. POLE CHANGER CONTACTS CHANGE OVER AT END OF STROKE OR ARE PULLED OVER BY THE SOLENOID IF THE MACHINE IS REVERSED DURING STROKE.
3. ISOLATING CONTACT TO BE STRAPPED WHERE INDIVIDUAL HAND CRANKS ARE USED.
4. STROKE OF DRIVE ROD 5".
   STROKE OF LOCK BAR 8½".

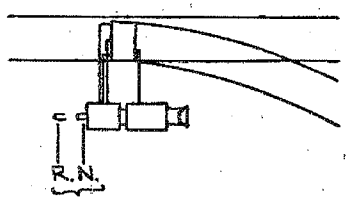

POSITION OF LOCK BAR.

INTERNAL WIRING OF 110 v.
D.C. COMBINED TYPE
POINT MACHINE.
S.G.E. TYPE HB 951.

L.N.E.R. SOUTHERN AREA.
SIGNAL & TELEGRAPH ENGINEER'S OFFICE
KING'S CROSS STATION N.1.

DRAWN BY E.A.R.
TRACED BY J.W.
CHECKED BY
DATE 11.6.43.

SWD 390 A

A	Rearranged & redrawn 4.6.43	21-9-50	A	19-5-52	J.A.S
B	30-5-47 10 NE WAS NA 10 RA NOTE ADDED	FORMERLY SWD 8	TYPE No 01 DETECTOR AMENDED	B 17-4-57	HJR
C	5-1-50			NOTE:- (OLD STANDARD). ADDED. N.M.	

STANDARD WIRING DIAGRAM

ELECTRICAL DETECTION OF MECHANICAL POINTS

S.G.E. TYPE HH101 DETECTOR (OLD STANDARD)

NOTE:- WHERE POINTS LAY THE OPPOSITE WAY TO THAT SHOWN, CONTACTS 9/10 - 11/12 ARE NORMALLY MADE, AND CONNECTIONS TO KR. R1 & R2 MUST BE REVERSED.

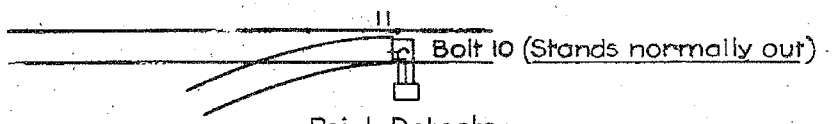

Point Detector
S.G.E. Type HH101.

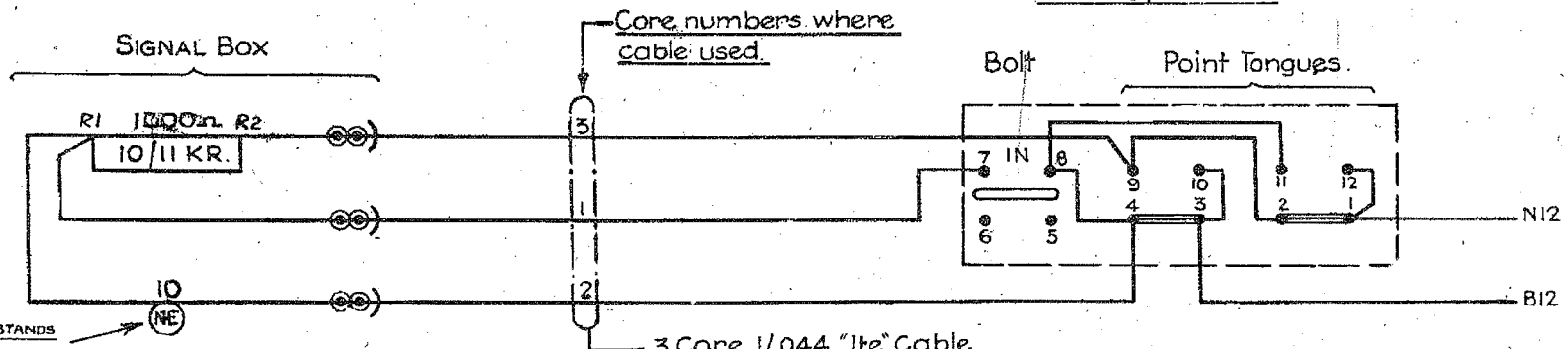

1 External Battery Feed

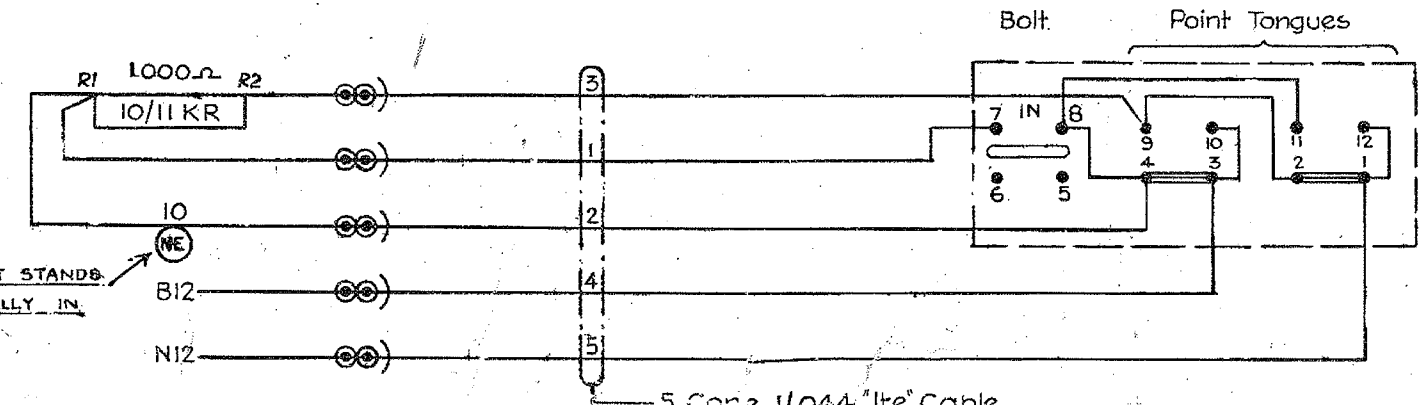

Feed from

L.N.E.R. SOUTHERN
SIGNAL & TELEGRAPH ENGINEERS
KINGS CROSS STATION N.

DRAWN BY [illegible]
TRACED BY W.T.
CHECKED BY [illegible]
DATE 4.6.43

SWD 39

ELECTRICAL DETECTION OF MECHANICAL POINTS

S.G.E. TYPE HM101 DETECTOR

FOR ATTACHMENT TO S.W.D. 395

NOTE :- WHERE POINTS LAY OPPOSITE WAY TO THAT SHEWN, SHEW CONTACTS 9/10 - 11/12 NORMALLY MADE, AND TERMINAL 9 CONNECTED TO R1 & TERMINALS 4&7 TO R2

TWO FACING ENDS WITH F.P.L.S WORKED BY ONE LEVER.

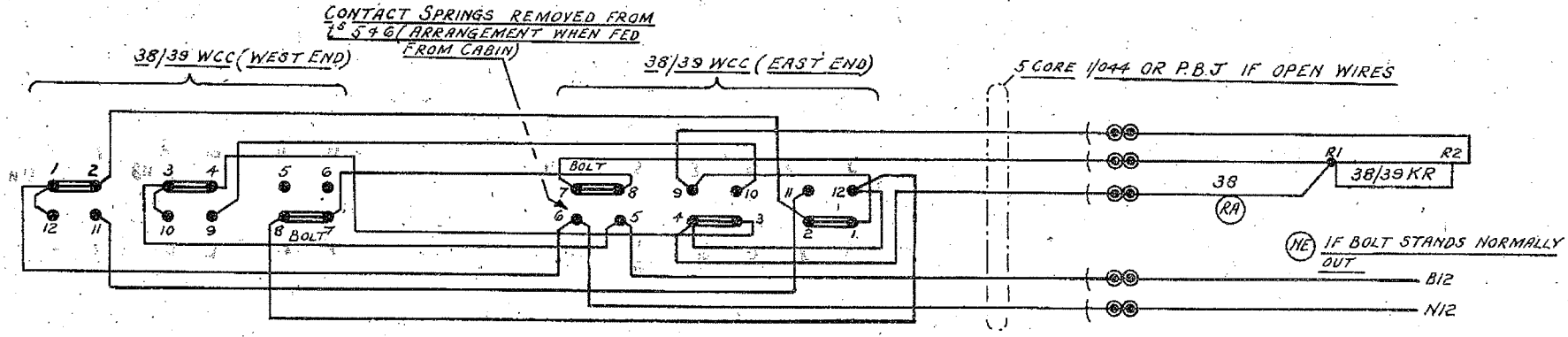

NOTE :- WHERE POINTS LAY OPPOSITE WAY TO THAT SHEWN. SHEW CONTACTS 9/10 - 11/12 NORMALLY MADE, AND TERMINAL 9 CONNECTED TO R1 & TERMINALS 4.7&8. TO R2.

TWO FACING ENDS WITH F.P.L.S WORKED BY SEPARATE LEVERS.

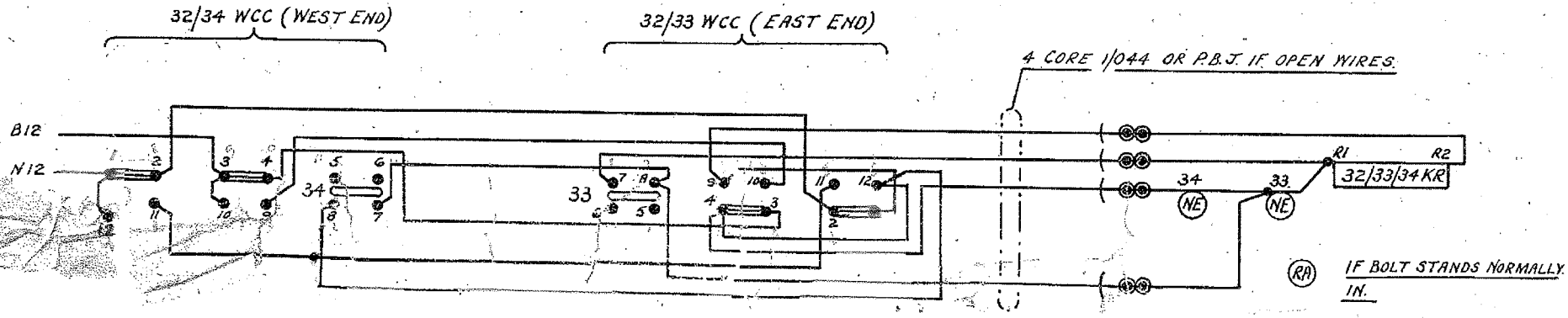

STANDARD WIRING DIAGRAM

1

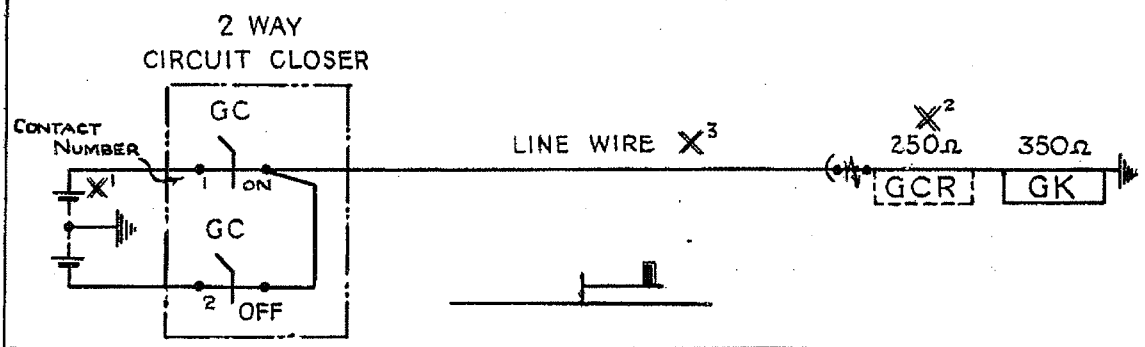

2

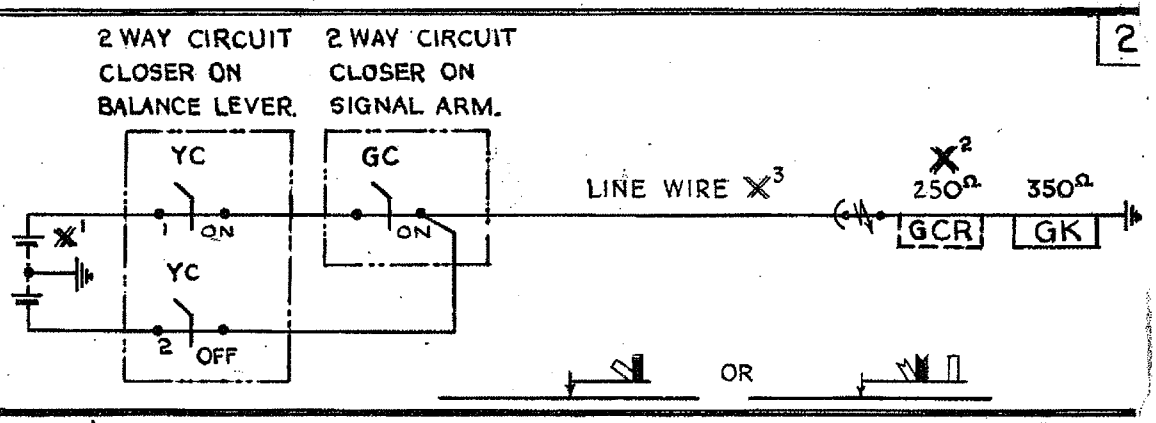

X1 BATTERIES REQUIRED (SEE BELOW)

CIRCUIT	NUMBER OF CELLS	
	"ON" SIDE	"OFF" SIDE
ITEMS 1 & 2 (WITHOUT GCR)	2	2
ITEMS 1 & 2 (WITH GCR)	5	3

Nº1 SAC CELLS FOR SINGLE REPEATER.
AD 236 CELLS FOR MORE THAN ONE REPEATER FED FROM SAME BATTERY.

NOTES

X2 GCRs

FOR SINGLE CIRCUIT USE SCH. 415, ITEM 435/10

FOR DOUBLE CIRCUIT USE SCH. 415, ITEM 430/15

X3 LINE WIRE

150lbs. CU. IN INDUSTRIAL AREAS,
100lbs. CADMIUM CU. ELSEWHERE.

SIGNAL REPEATER CIRCUITS.

1. ARM ONLY

2. ARM & BALANCE LEVER (CONTROLLED SIGNAL)

L.N.E.R. SOUTHERN AREA.
SIGNAL & TELEGRAPH ENGINEER'S OFFICE
KINGS CROSS STATION. N.1.

DRAWN BY E.A.R.	SWD.401B
TRACED BY T.W.E.	
CHECKED BY	DATE

B	29-12-61	J.P.
COMBINED ARM & LIGHT "REPEATER CCT. DELE, ITEM 2 WAS ITEM 3.		
A	19-5-52	J.A.S.
0" SETTING OF CC3 AMENDED TO "ON" EIO NOTE AMENDED		
1		
FORMERLY SWD 5 INDICATION LIMITS DELETED.		
1000Ω RESISTANCE INCLUDED IN E.K CIRCUIT. LINE WIRE [illegible]		
ITEM REFERENCE CHANGED. BATTERY CELL DESCRIPTIONS ADDED		

STANDARD WIRING DIAGRAM

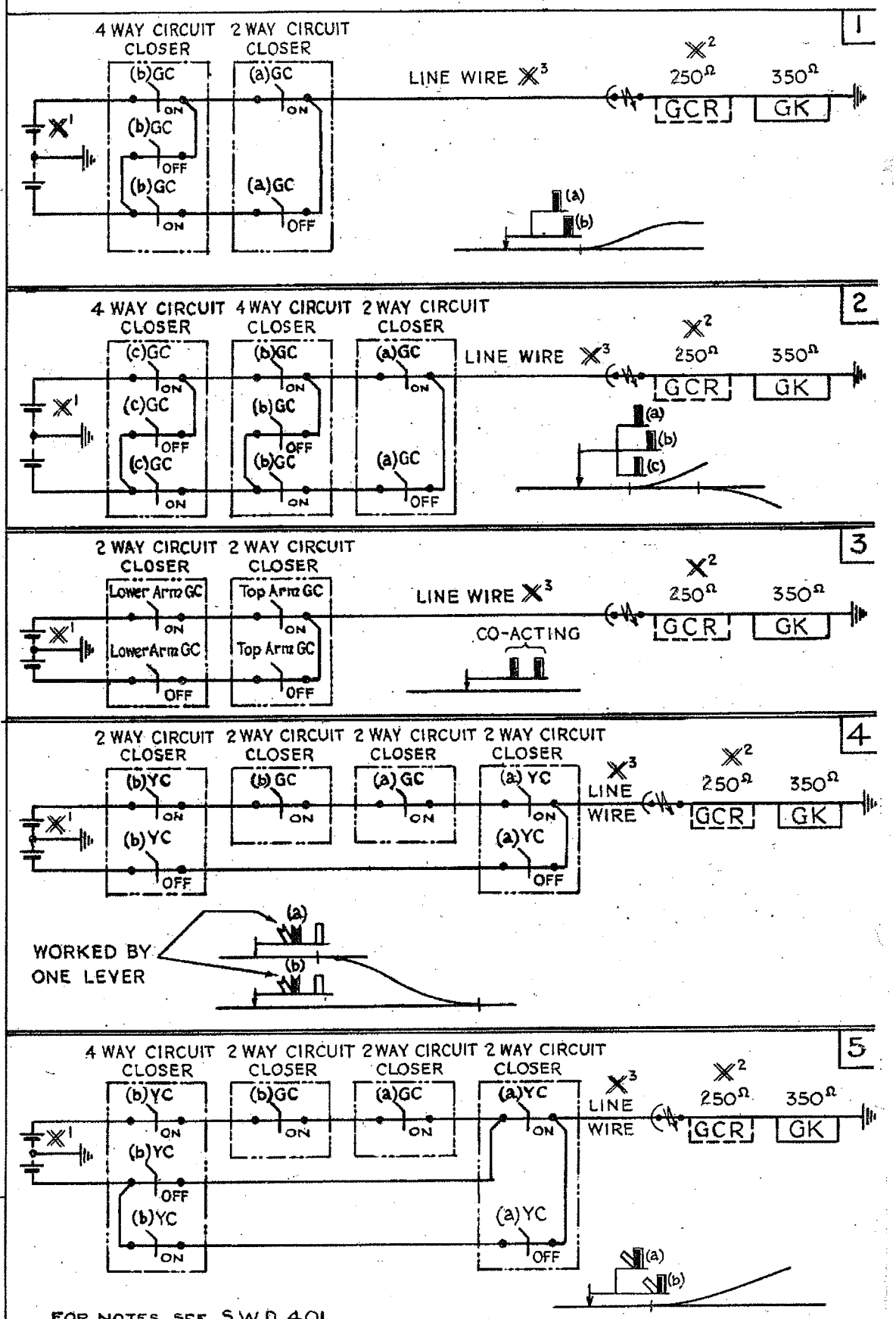

FOR NOTES SEE S.W.D. 401.

SIGNAL REPEATER CIRCUITS

1. ARMS ONLY, FOR TWO DIVERGING LINES.
2. ARMS ONLY, FOR THREE DIVERGING LINES.
3. ARMS ONLY, FOR TWO CO-ACTING.
4. ARMS & SLOTS, FOR TWO CONVERGING LINES.
5. ARMS & SLOTS, FOR TWO DIVERGING LINES.

L.N.E.R. SOUTHERN AREA.
SIGNAL & TELEGRAPH ENGINEER'S OFFICE, KINGS CROSS STATION. N.1.

DRAWN BY E.A.R.	S.W.D.402 A
TRACED BY T.W.E.	
CHECKED BY	DATE 15. 11. 40.

21-9-50		A	19.5.52 LAS

FORMERLY S.W.D.6

0° SETTING OF CC's AMENDED TO "ON"

STANDARD WIRING DIAGRAM

1

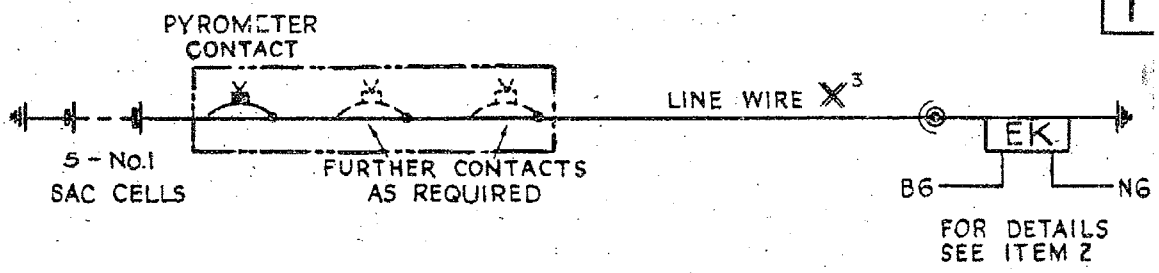

2

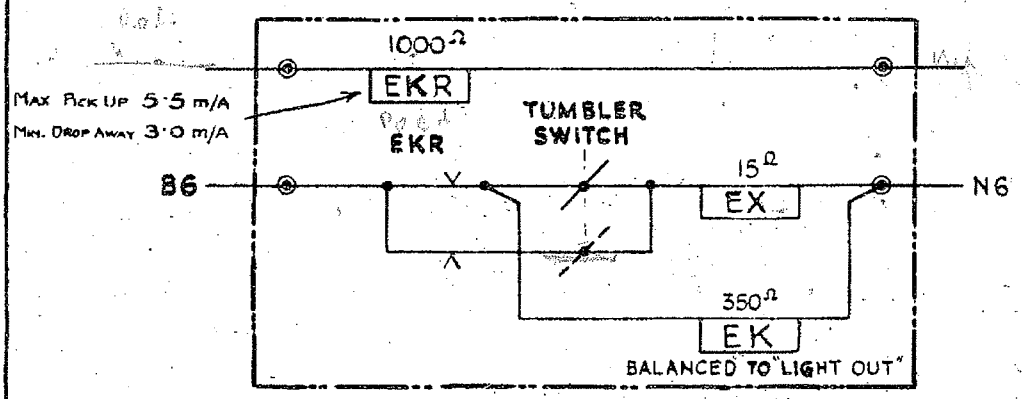

LIGHT INDICATOR UNIT

WHERE AVAILABLE, THE CABIN BATTERY IS TO BE TAPPED TO OBTAIN THE 6v. LOCAL SUPPLY.

FOR NOTES SEE S.W.D.401

SIGNAL REPEATER CIRCUITS

1. LIGHT ONLY

L.N.E.R. SOUTHERN AREA.
SIGNAL & TELEGRAPH ENGINEER'S OFFICE
KINGS CROSS STATION N.1

DRAWN BY E.A.R.
TRACED BY T.W.E.

SWD.403

21-9-50	G	FORMERLY SWD 7
8-6-48	B	ITEM No 1, 7 CELLS REDUCED. ITEM No 2, RELAY CHARACTERISTICS ADDED.
		REFERENCE ...GED.

STANDARD WIRING DIAGRAM

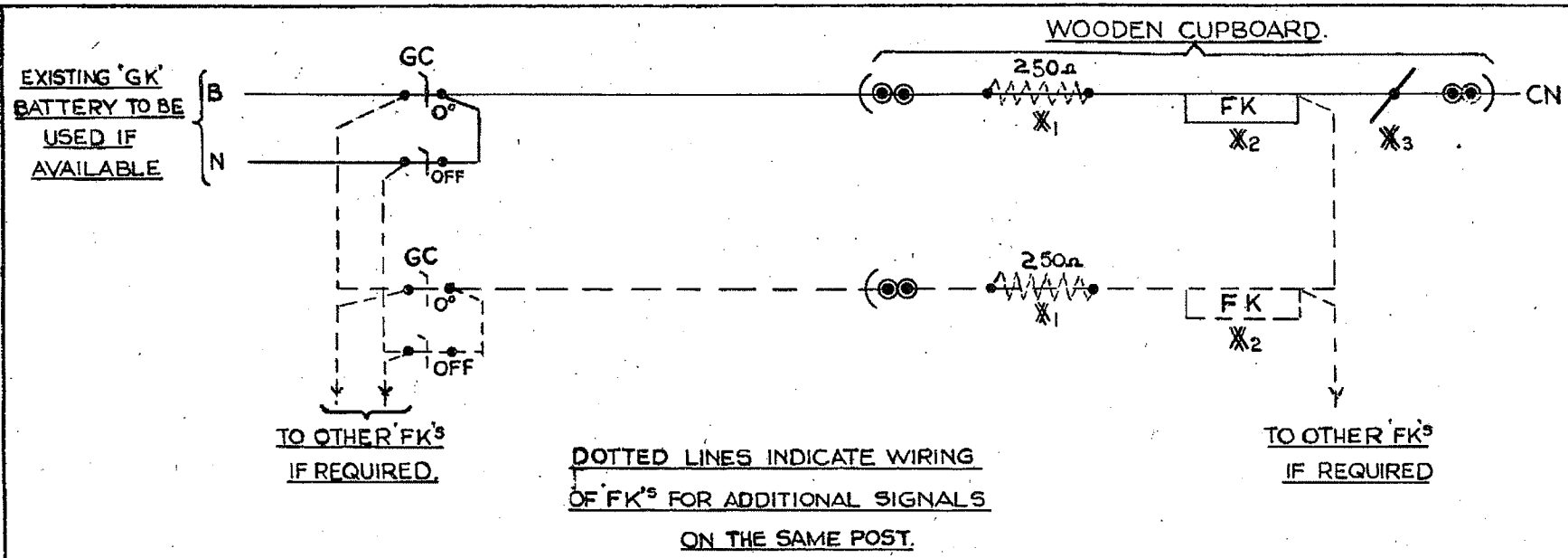

DOTTED LINES INDICATE WIRING OF 'FK's FOR ADDITIONAL SIGNALS ON THE SAME POST.

X1 RESISTANCE, IF REQUIRED, WHEN USING 'GK/GCR' BATTERY.

X2 350Ω NEEDLE TYPE SIGNAL INDICATOR BIASSED TO 'ON'.

X3 ECONOMISER CONTACT OPERATED BY CUPBOARD DOOR.

FOGSIGNALMEN'S ELECTRICAL REPEATER CIRCUIT.

RAILWAY EXECUTIVE-EASTERN REGION.
SIGNAL & TELEGRAPH ENGINEER'S OFFICE
KINGS CROSS STATION, N.1.

DRAWN BY N.M.
TRACED BY
CHECKED BY
DATE 20·6·52

SWD408

STANDARD WIRING DIAGRAM

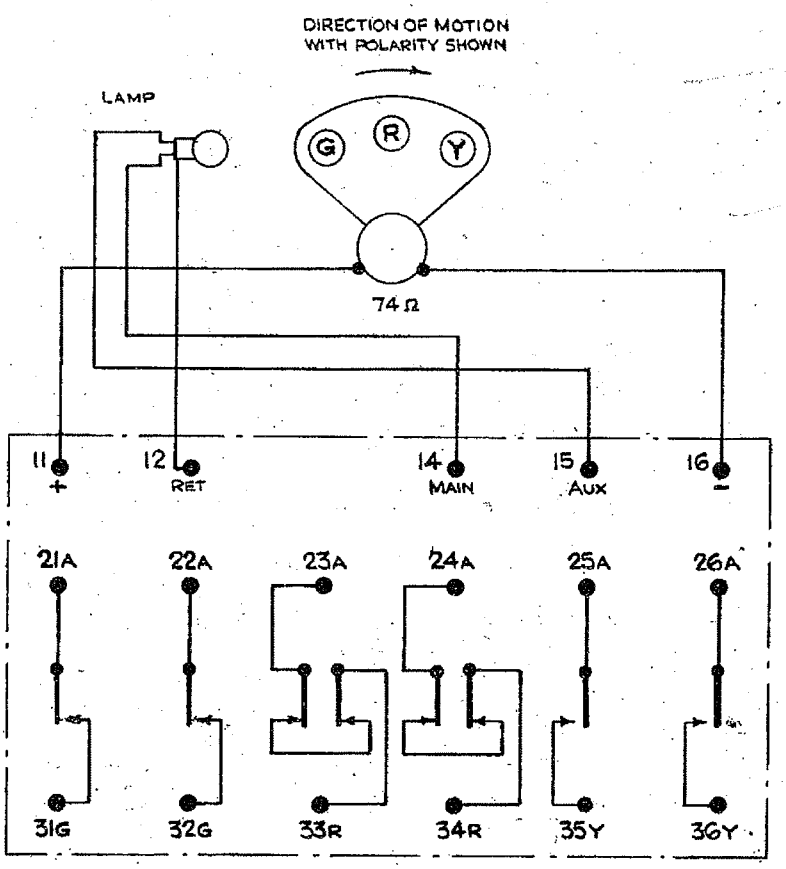

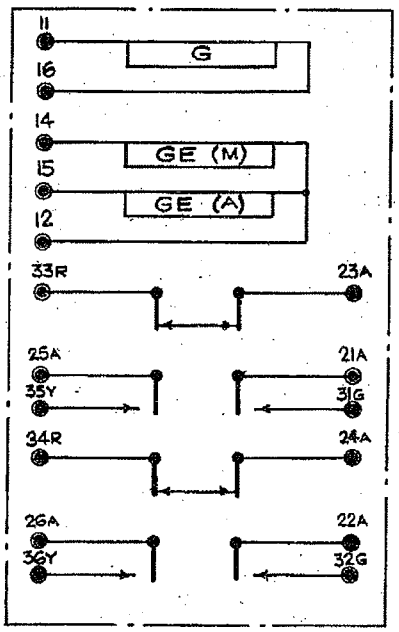

G.R.S. TYPE SA. SEARCHLIGHT SIGNAL.

WITH TWO SETS OF PROVING CONTACTS.

INTERNAL CONNECTIONS.

L.N.E.R. SOUTHERN AREA.
SIGNAL & TELEGRAPH ENGINEER'S OFFICE
KINGS CROSS STATION. N.1.

DRAWN BY
TRACED BY
CHECKED BY
SWD411
DATE 3.8.44

FORMERLY S.W.D. 33

14·2·52 J.S.

FORMERLY SWD 31

COLOUR LIGHT SIGNALS

OPERATED BY MECHANICAL WIRE

SEARCHLIGHT TYPE

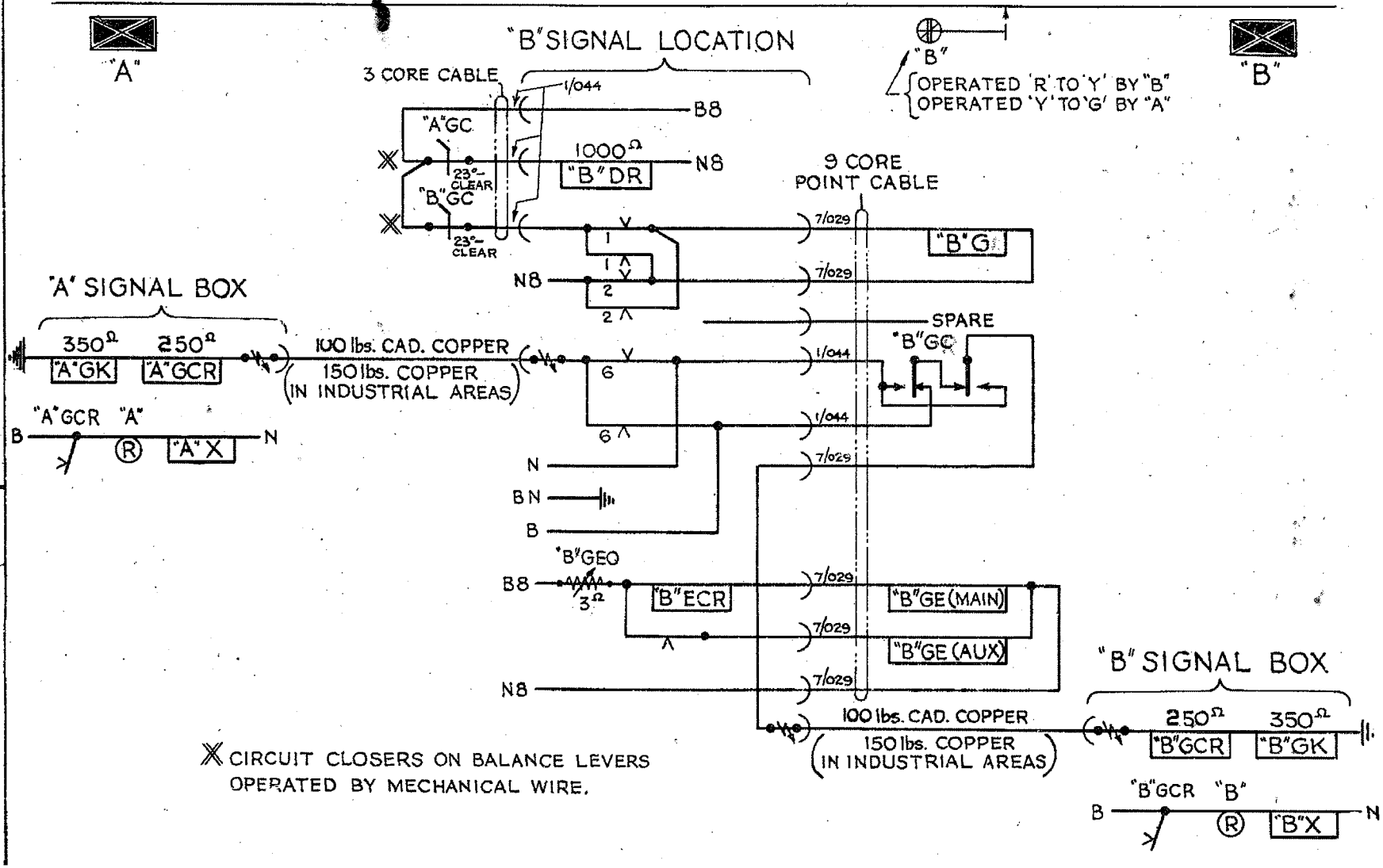

STANDARD WIRING DIAGRAM

L.N.E.R. SOUTHERN AREA.
SIGNAL & TELEGRAPH ENGINEER'S OFFICE
KINGS CROSS STATION, N.1.

DRAWN BY J.R.McL
TRACED BY T.W.E.
CHECKED BY
DATE

S.W.D. 412

A	5-8-44	J.O.G.	14-2-52	J.S.

REPEATING CIRCUITS AMENDED & DIAGRAM OF MECHANICAL LAYOUT ADDED.

FORMERLY SW932

STANDARD WIRING DIAGRAM

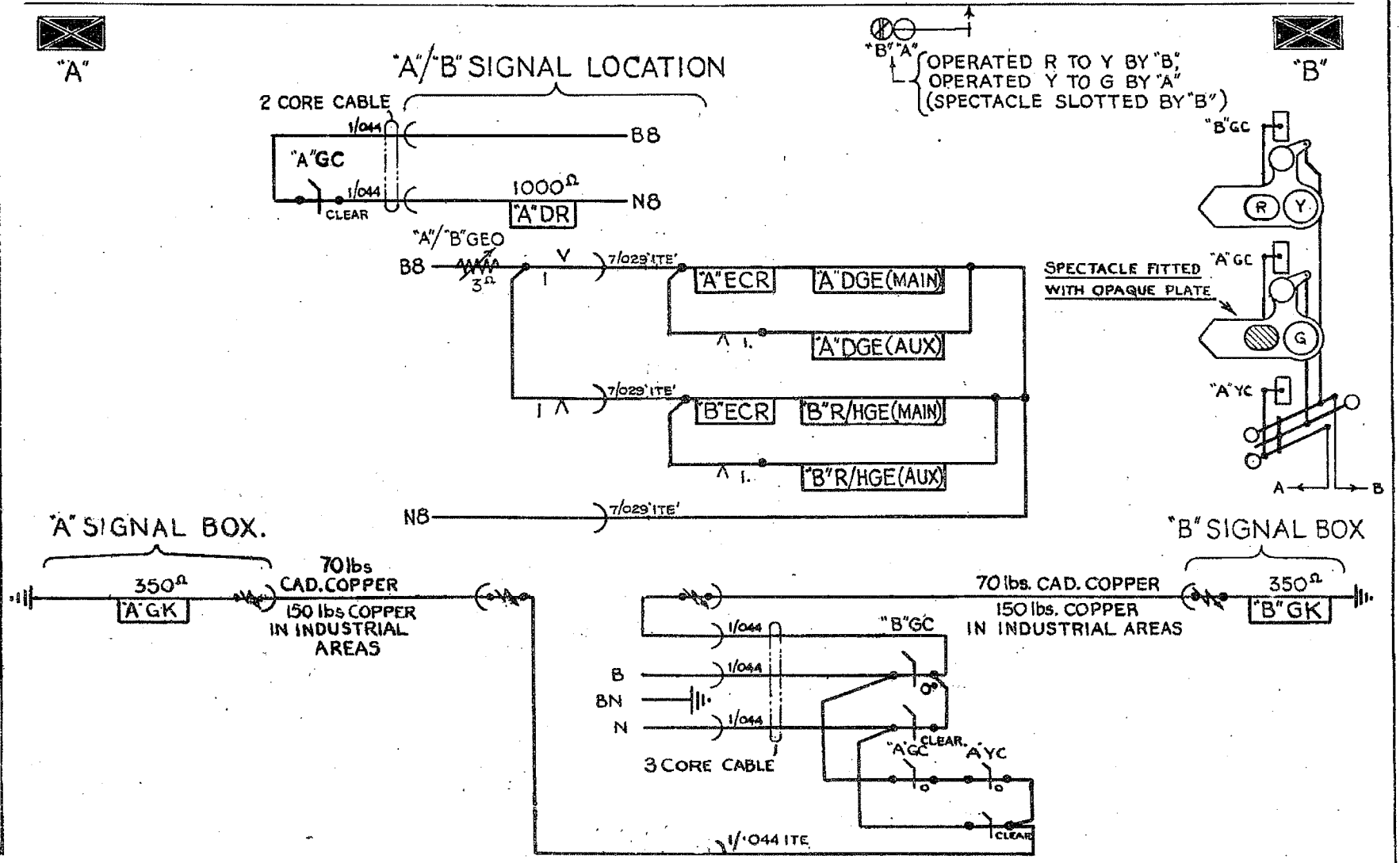

COLOUR LIGHT SIGNALS

OPERATED BY MECHANICAL WIRE

"ADLAKE" TYPE

L.N.E.R. SOUTHERN AREA.
SIGNAL & TELEGRAPH ENGINEER'S OFFICE
KINGS CROSS STATION. N.1.

DRAWN BY J.R.McL
TRACED BY T.W.E.
CHECKED BY
DATE

S.W.D. 413

A | 8·2·52 | JS

FORMERLY SWD.34

STANDARD WIRING DIAGRAM

COLOUR LIGHT SIGNALS

ELECTRICALLY OPERATED 2 ASPECT DISTANT SEARCHLIGHT.

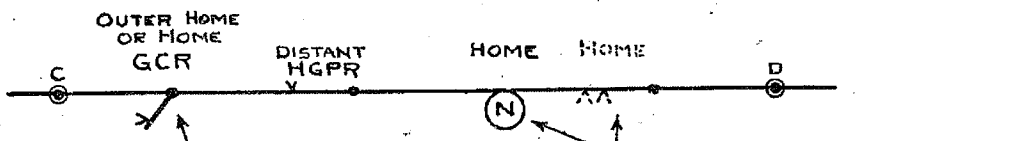

NOTE. IF NO BLOCK CONTROL EXISTS, IT SHOULD BE PROVIDED IN ACCORDANCE WITH SWD 312.

TO BE PROVIDED IF SIGNAL IS REPEATED.

CIRCUIT CLOSER MAY NOT BE REQUIRED IF LEVER LOCK PROVIDED.

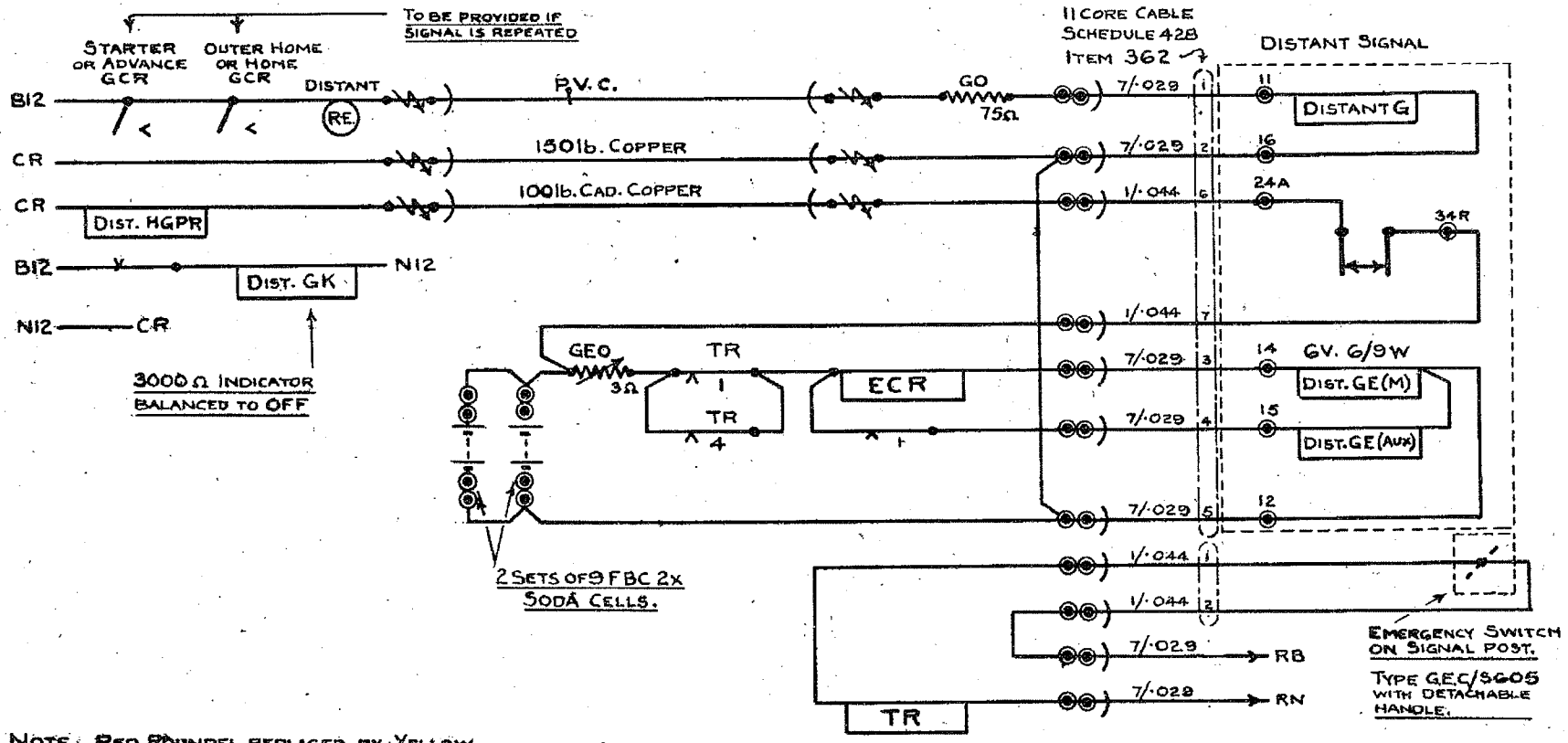

NOTE. RED ROUNDEL REPLACED BY YELLOW.

L.N.E.R. SOUTHERN AREA.
SIGNAL & TELEGRAPH ENGINEER'S OFFICE
KING'S CROSS STATION, N.1.

DRAWN BY J.O.L.
TRACED BY
CHECKED BY
DATE 8-7-47

SWD 414

STANDARD WIRING DIAGRAM

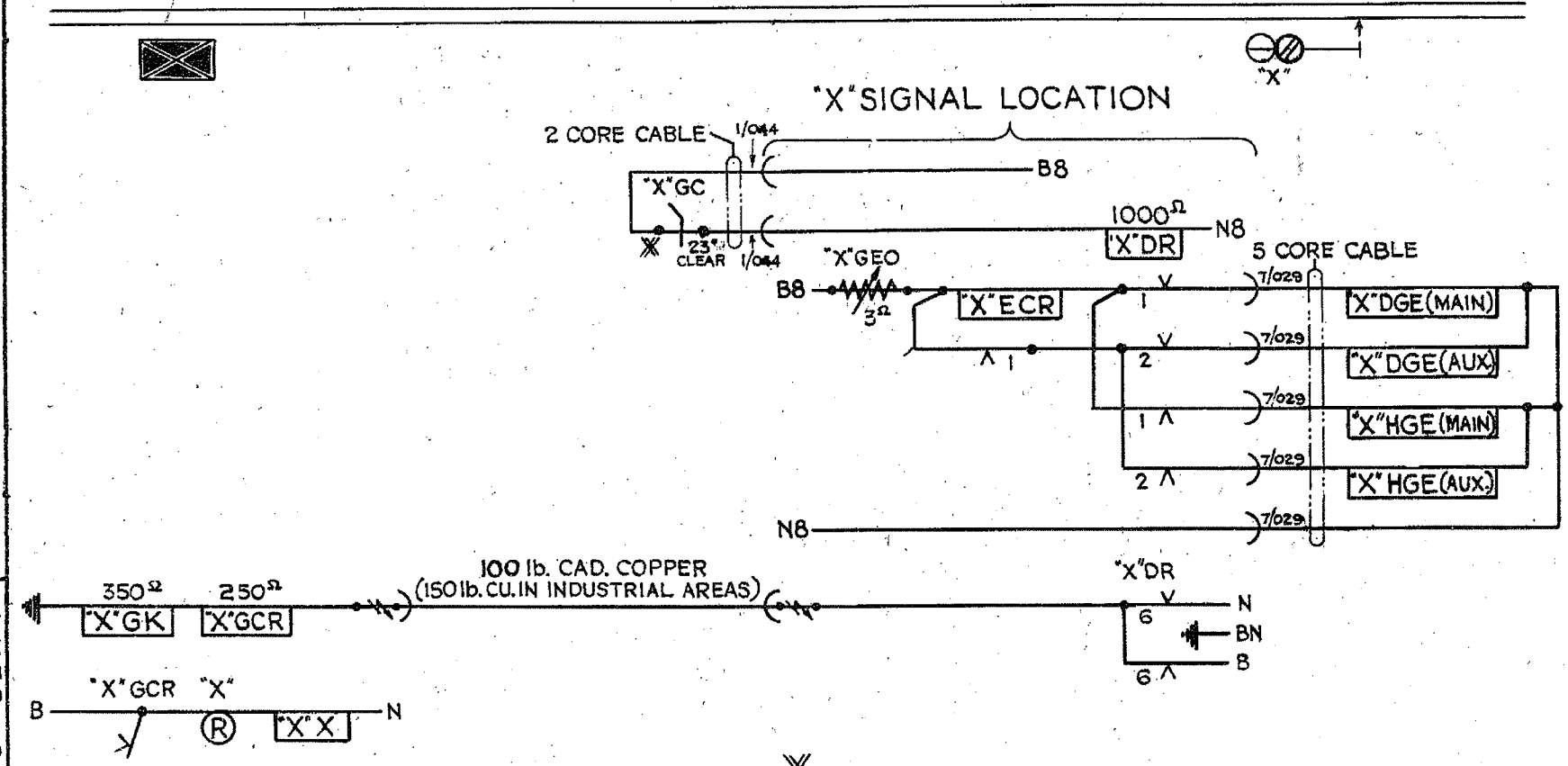

✕ CIRCUIT CLOSER ON BALANCE LEVER OPERATED BY MECHANICAL WIRE.

COLOUR LIGHT SIGNALS

OPERATED BY MECHANICAL WIRE

MULTI-UNIT TYPE

L.N.E.R. SOUTHERN AREA.
SIGNAL & TELEGRAPH ENGINEER'S OFFICE
KINGS CROSS STATION, N.1.

DRAWN BY J.R.
TRACED BY T.W.E.
CHECKED BY
DATE

S.W.D 415.

A	1·2·55		B	5-7-61 JP
BLOCK SWITCH CONTACT CONNECTED ACROSS A.TR IN FIG.2 INSTEAD OF ACROSS 1 (N) LEVER CONTACT. HM.			SIGNAL CONTACT SETTINGS ALTERED TO READ 'OFF' RR	

STANDARD WIRING DIAGRAM

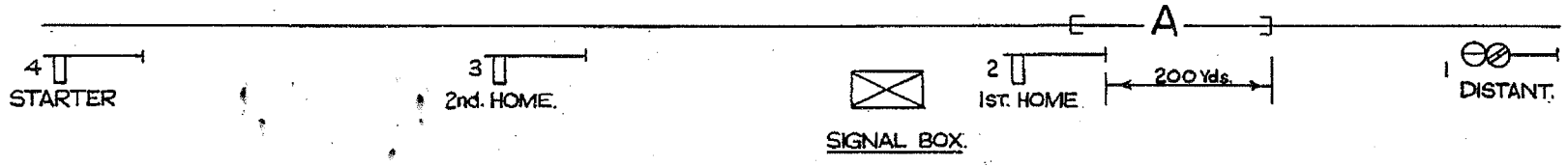

① TRACK CIRCUIT NOT PROVIDED AT 1st. HOME SIGNAL.

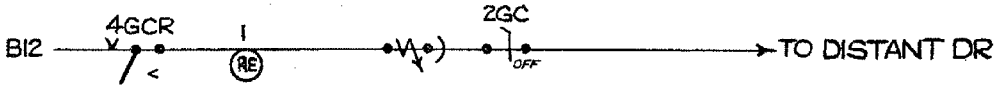

② TRACK CIRCUIT PROVIDED AT 1st. HOME SIGNAL. 3 WIRE 3 POSITION SN BLOCK.

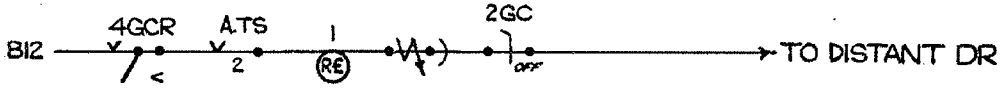

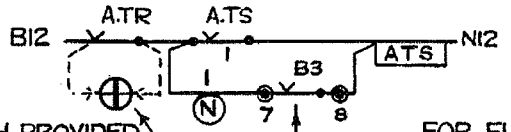

BLOCK SWITCH PROVIDED IF BOX SWITCHES OUT.

FOR FURTHER DETAILS OF 'B' RELAY (BZR) SEE S.W.D 300.

③ TRACK CIRCUIT PROVIDED AT 1st. HOME SIGNAL. 1 WIRE 2 POSITION TYERS BLOCK.

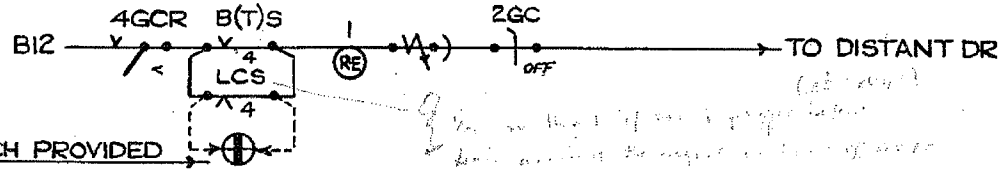

BLOCK SWITCH PROVIDED IF BOX SWITCHES OUT.

NOTES

ARMS TO BE PROVED OFF IN THE FOLLOWING CASES:-

1. SIGNALS WHICH ARE REPEATED.
2. SIGNALS WITH MECHANICAL DETECTION.
3. WHERE THE CONTROL WIRE OF THE DR PASSES BY A SIGNAL.

FOR COMPLETE WIRING OF BLOCK INSTRUMENTS,
SEE DRAWING S.W.D. 300. (3 WIRE, 3 POSITION.)
" " S.W.D. 322. (1 WIRE, 2 POSITION.)

2 ASPECT COLOUR LIGHT DISTANT SIGNAL. CONTROL CIRCUITS.

RAILWAY EXECUTIVE-EASTERN REGION.
SIGNAL & TELECOMMUNICATIONS ENGR. OFFICE.
KINGS CROSS STATION, N.1.

DRAWN BY V.C.
TRACED BY R.S.T.
CHECKED BY N.M.
DATE. 10·2·53

SWD 416. B

STANDARD WIRING DIAGRAM

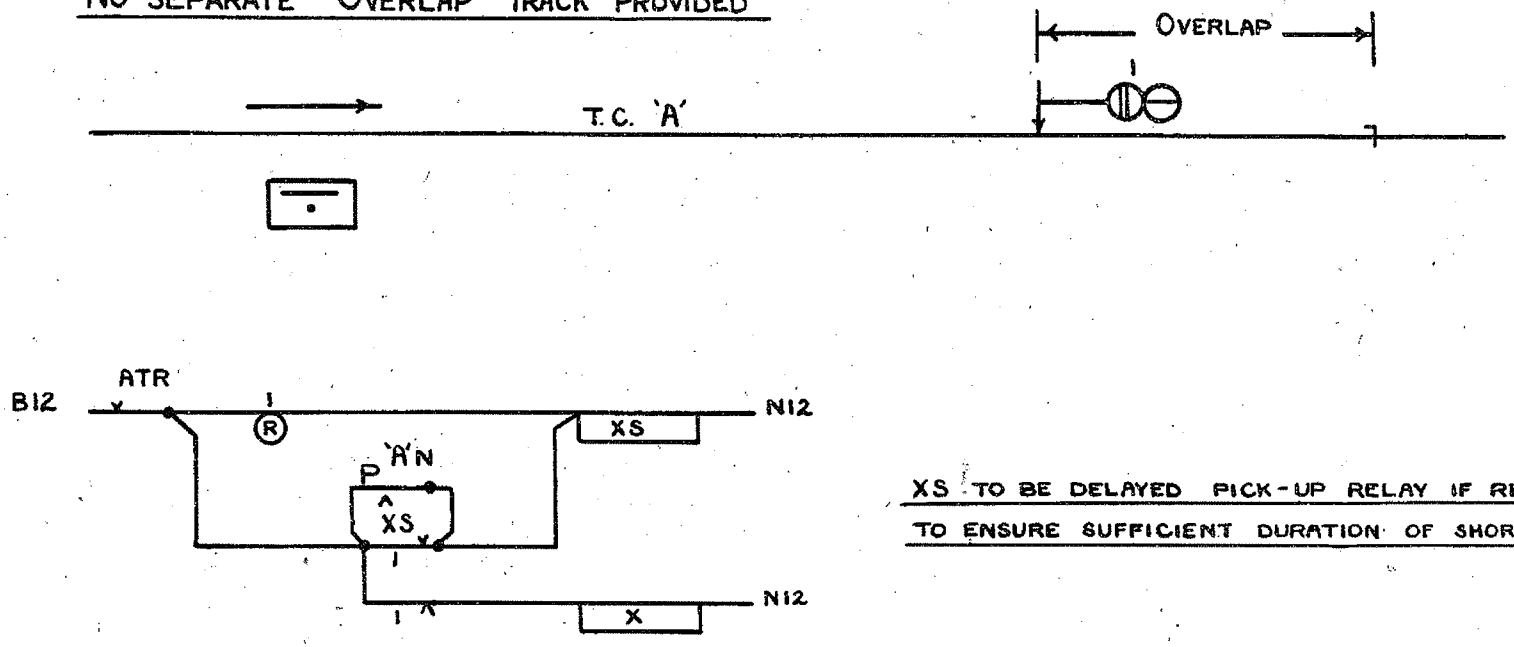

XS TO BE DELAYED PICK-UP RELAY IF REQUIRED, TO ENSURE SUFFICIENT DURATION OF SHORT RING.

NOTES.

IF LEVER No. 1 IS REVERSE, A SHORT RING IS GIVEN WHEN THE TRAIN CLEARS THE OVERLAP.

IF LEVER No. 1 IS NORMAL, A CONTINUOUS RING IS GIVEN WHEN THE TRAIN CLEARS THE OVERLAP.

'A'N = ACKNOWLEDGEMENT PLUNGER.

INTERMEDIATE BLOCK SIGNAL

"TRAIN RUNNING AWAY" INDICATION

SEPARATE OVERLAP TRACK NOT PROVIDED

RAILWAY EXECUTIVE - EASTERN REGION

SIGNAL & TELECOMMUNICATIONS ENG^R. OFFICE KINGS CROSS STATION N.1.

DRAWN BY V.C.

TRACED BY Y.R.

CHECKED BY N.M

DATE 23.3.53.

S.W.D. 420

STANDARD WIRING DIAGRAM

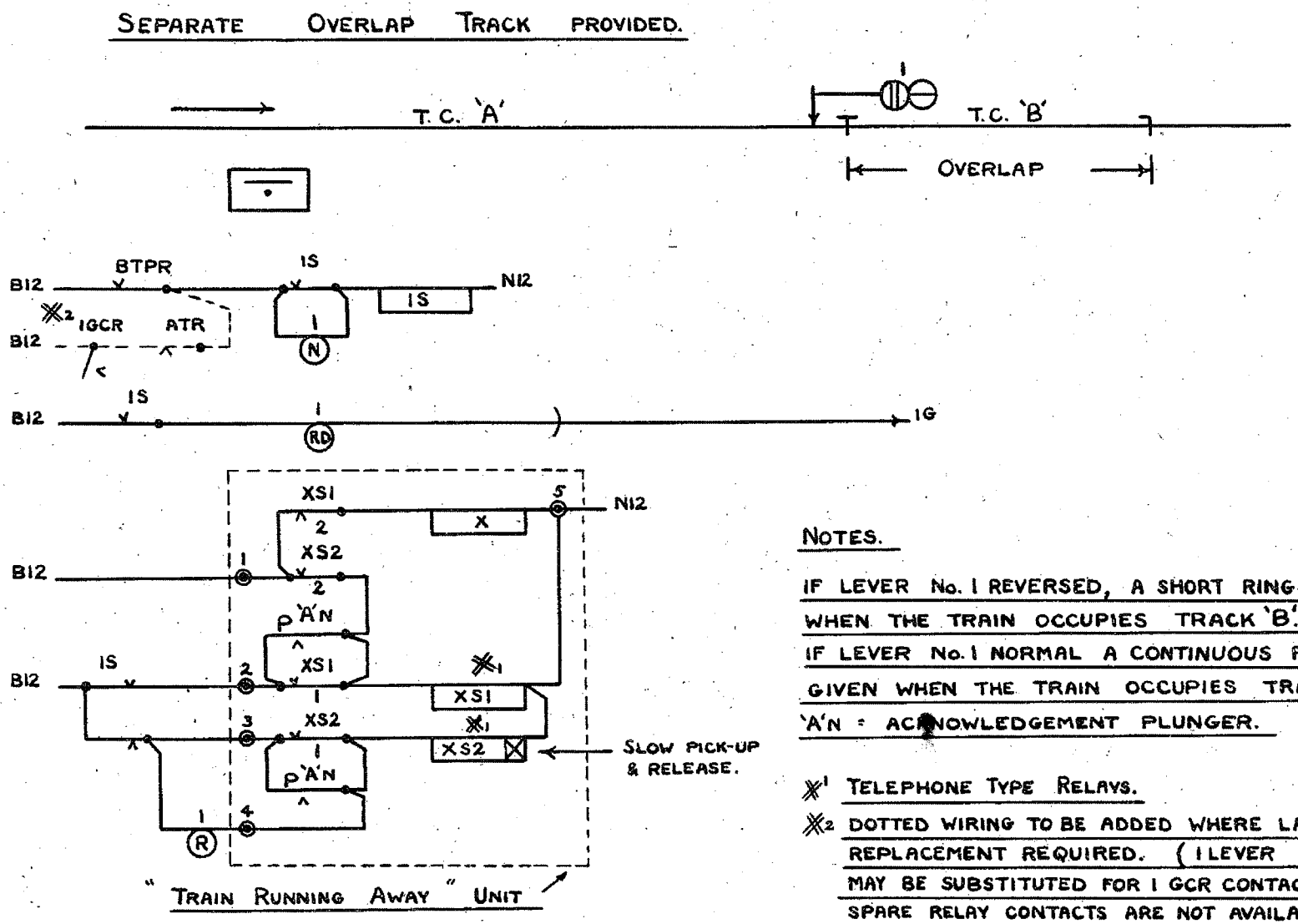

NOTES.

IF LEVER No. 1 REVERSED, A SHORT RING IS GIVEN WHEN THE TRAIN OCCUPIES TRACK 'B'.

IF LEVER No. 1 NORMAL A CONTINUOUS RING IS GIVEN WHEN THE TRAIN OCCUPIES TRACK 'B'.

'A'N = ACKNOWLEDGEMENT PLUNGER.

※1 TELEPHONE TYPE RELAYS.

※2 DOTTED WIRING TO BE ADDED WHERE LAST WHEEL REPLACEMENT REQUIRED. (1 LEVER RD CONTACT MAY BE SUBSTITUTED FOR 1 GCR CONTACT WHERE SPARE RELAY CONTACTS ARE NOT AVAILABLE.)

INTERMEDIATE BLOCK SIGNAL

"TRAIN RUNNING AWAY" INDICATION

SEPARATE OVERLAP TRACK PROVIDED

RAILWAY EXECUTIVE-EASTERN REGION

SIGNAL & TELECOMMUNICATIONS ENG^R. OFFICE KINGS CROSS STATION N.1.

DRAWN BY V.C.

TRACED BY Y.R.

CHECKED BY N.M.

DATE 23.3.53.

S.W.D. 421

STANDARD WIRING DIAGRAM

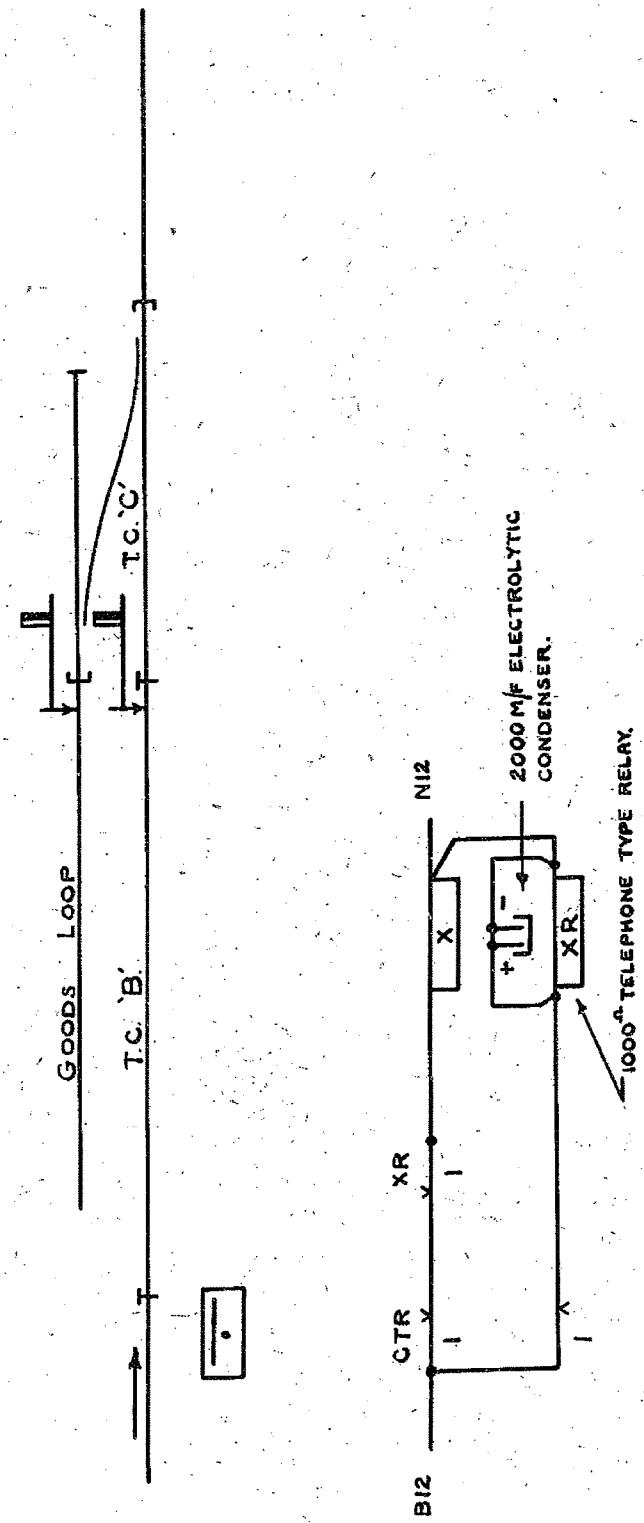

NOTE :- BUZZER SOUNDS WHEN TRACK CIRCUIT OCCUPIED & CLEARED.

INTERMEDIATE BLOCK SIGNAL

"TRAIN PAST" AUDIBLE

INDICATION CIRCUIT

RAILWAY EXECUTIVE - EASTERN REGION

SIGNAL & TELECOMMUNICATIONS ENGINEER OFFICE
KINGS CROSS STATION N.1.

DRAWN BY V.C.	S.W.D. 422
TRACED BY Y.R.	
CHECKED BY N.M	DATE 23.3.53.

STANDARD WIRING DIAGRAM

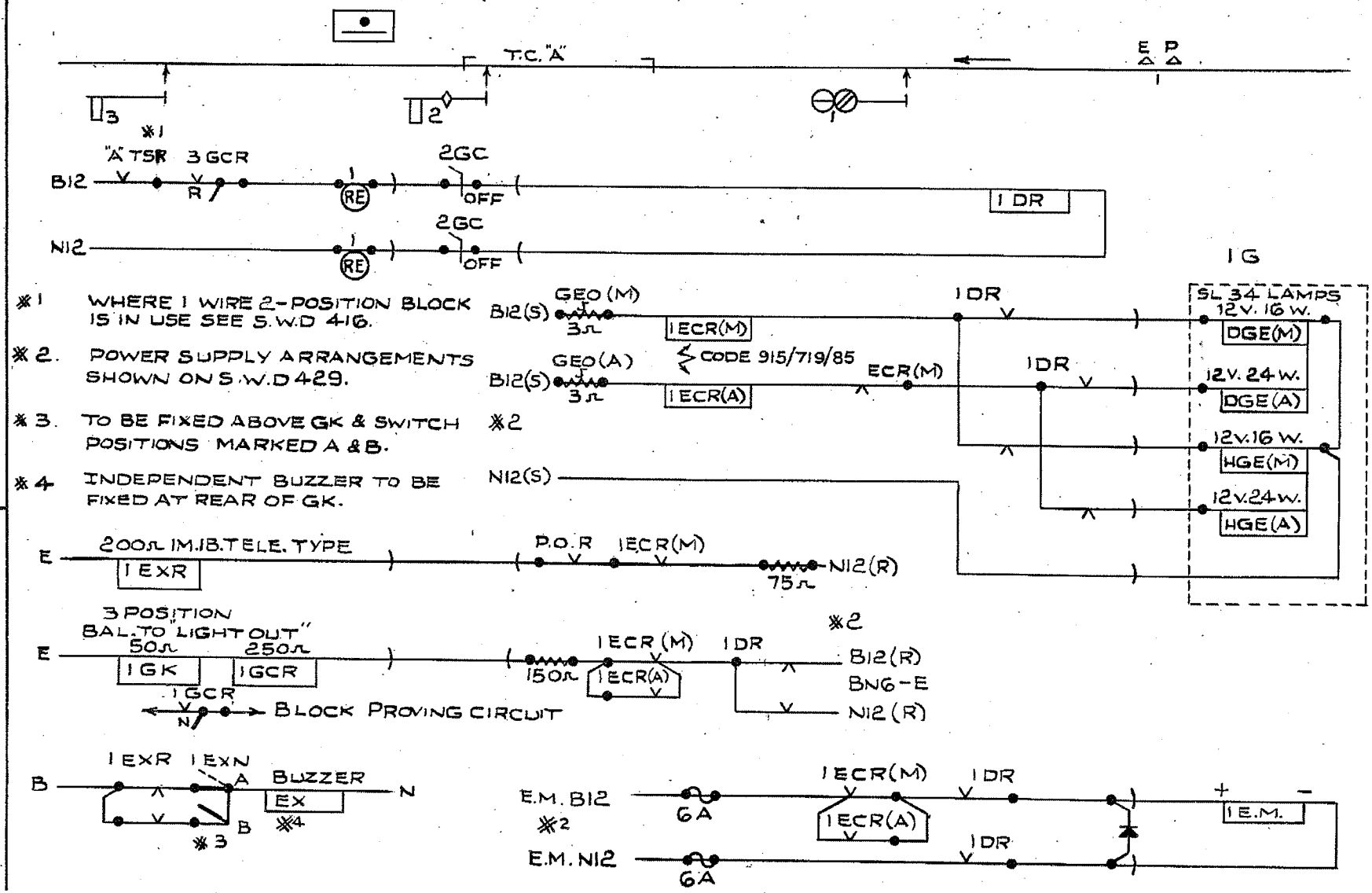

※1 WHERE I WIRE 2-POSITION BLOCK IS IN USE SEE S.W.D 416.

※2. POWER SUPPLY ARRANGEMENTS SHOWN ON S.W.D 429.

※3. TO BE FIXED ABOVE GK & SWITCH POSITIONS MARKED A & B.

※4 INDEPENDENT BUZZER TO BE FIXED AT REAR OF GK.

COLOUR LIGHT SIGNALS
MULTI-UNIT TYPE
WITH LAMP PROVING
2-ASPECT DISTANT

BR. E.R.
CHIEF S.& T. ENGINEER'S DEPT.

DRAWN BY H.C.
TRACED BY P.A.G.
CHECKED BY
DATE 14. 4. 65

SWD 423

STANDARD WIRING DIAGRAM

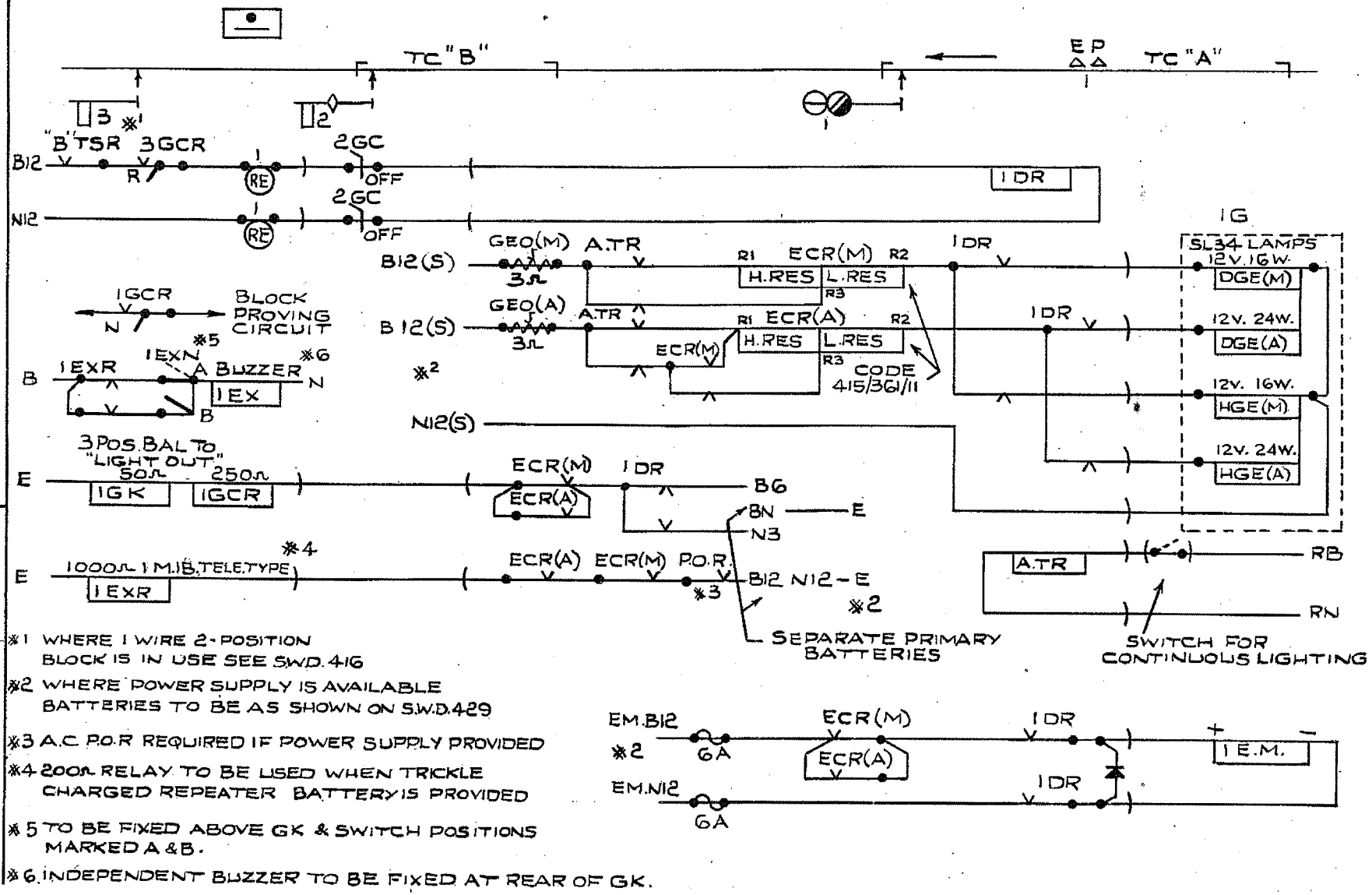

※1 WHERE 1 WIRE 2-POSITION BLOCK IS IN USE SEE S.W.D. 416

※2 WHERE POWER SUPPLY IS AVAILABLE BATTERIES TO BE AS SHOWN ON S.W.D. 429

※3 A.C. P.O.R REQUIRED IF POWER SUPPLY PROVIDED

※4 200Ω RELAY TO BE USED WHEN TRICKLE CHARGED REPEATER BATTERY IS PROVIDED

※5 TO BE FIXED ABOVE GK & SWITCH POSITIONS MARKED A & B.

※6 INDEPENDENT BUZZER TO BE FIXED AT REAR OF GK.

COLOUR LIGHT SIGNALS
MULTI-UNIT TYPE
WITH LAMP PROVING
2-ASPECT DISTANT
WITH APPROACH LIGHTING

BR~ER.

CHIEF S.&T. ENGINEER'S DEPT.

DRAWN BY H.C.

TRACED BY P.A.G.

CHECKED BY RR

DATE 14.4.65

SWD 424

STANDARD WIRING DIAGRAM

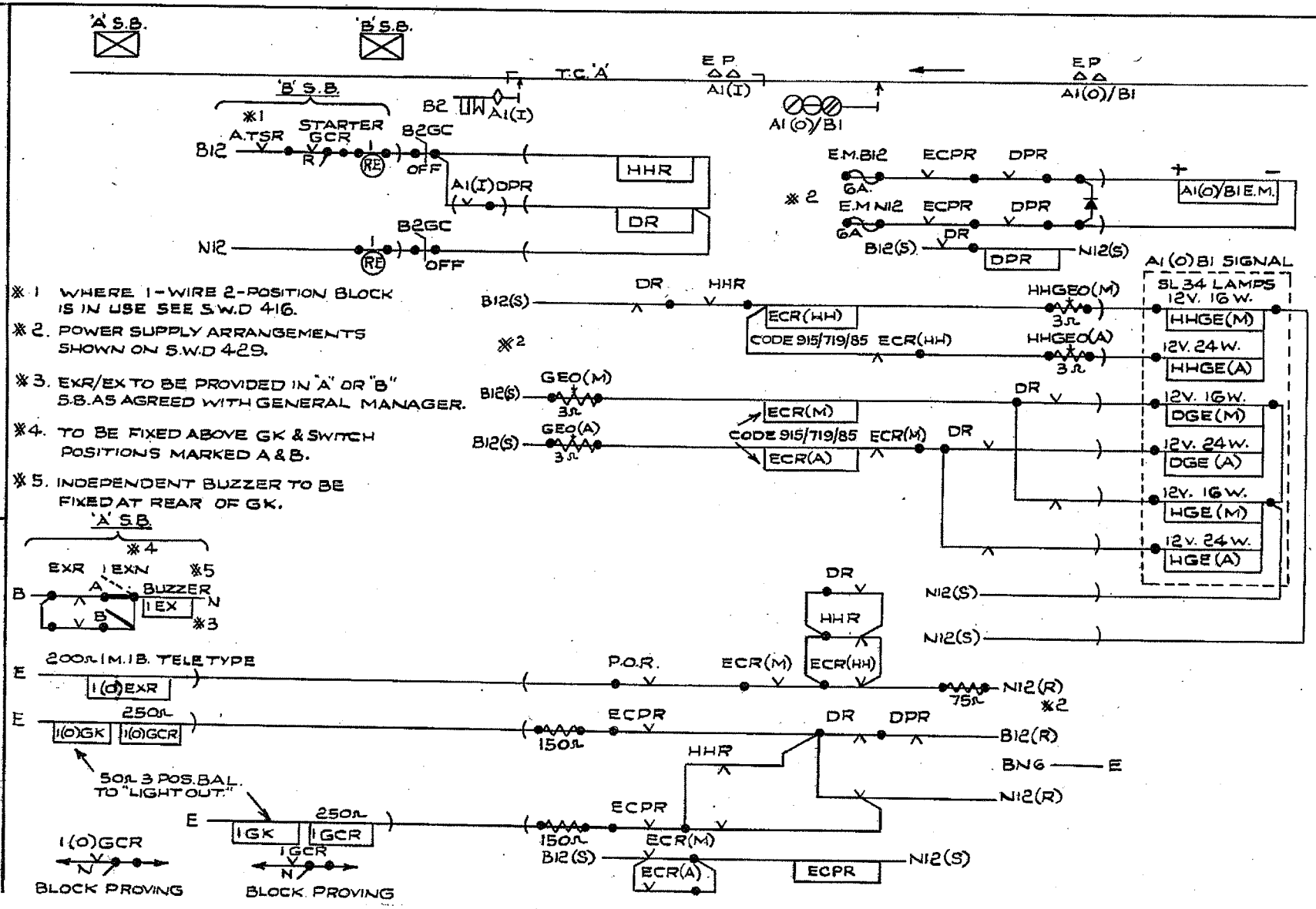

※1 WHERE 1-WIRE 2-POSITION BLOCK IS IN USE SEE S.W.D 416.

※2. POWER SUPPLY ARRANGEMENTS SHOWN ON S.W.D 429.

※3. EXR/EX TO BE PROVIDED IN "A" OR "B" S.B. AS AGREED WITH GENERAL MANAGER.

※4. TO BE FIXED ABOVE GK & SWITCH POSITIONS MARKED A & B.

※5. INDEPENDENT BUZZER TO BE FIXED AT REAR OF GK.

COLOUR LIGHT SIGNALS
MULTI-UNIT TYPE
WITH LAMP PROVING
3-ASPECT DISTANT
CONTROLLED FROM TWO S.B.'S

B.R.~ER.
CHIEF S.&T. ENGINEER'S DEPT.

DRAWN BY H.C.
TRACED BY P.A.G.
CHECKED BY RR
DATE 14.4.65

SWD 425

STANDARD WIRING DIAGRAM

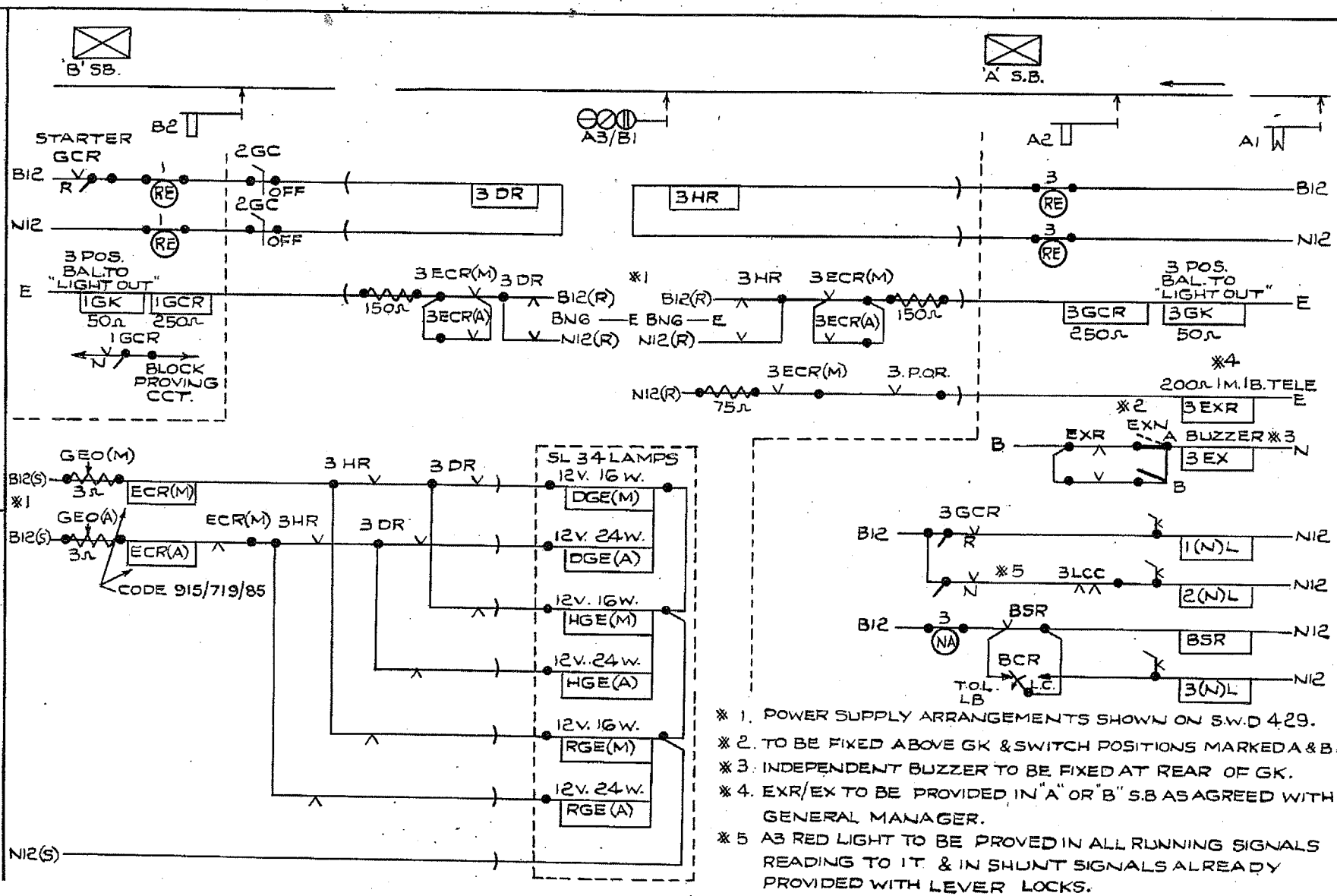

※ 1. POWER SUPPLY ARRANGEMENTS SHOWN ON S.W.D 429.

※ 2. TO BE FIXED ABOVE GK & SWITCH POSITIONS MARKED A & B.

※ 3. INDEPENDENT BUZZER TO BE FIXED AT REAR OF GK.

※ 4. EXR/EX TO BE PROVIDED IN "A" OR "B" S.B AS AGREED WITH GENERAL MANAGER.

※ 5 A3 RED LIGHT TO BE PROVED IN ALL RUNNING SIGNALS READING TO IT & IN SHUNT SIGNALS ALREADY PROVIDED WITH LEVER LOCKS.

COLOUR LIGHT SIGNALS

MULTI-UNIT TYPE

WITH LAMP PROVING

3-ASPECT STARTER/DISTANT

BR-ER.

CHIEF S&T. ENGINEER'S DEPT.

DRAWN BY H.C.

TRACED BY P.A.G.

CHECKED BY RR

DATE 14.4.65

SWD 426

STANDARD WIRING DIAGRAM

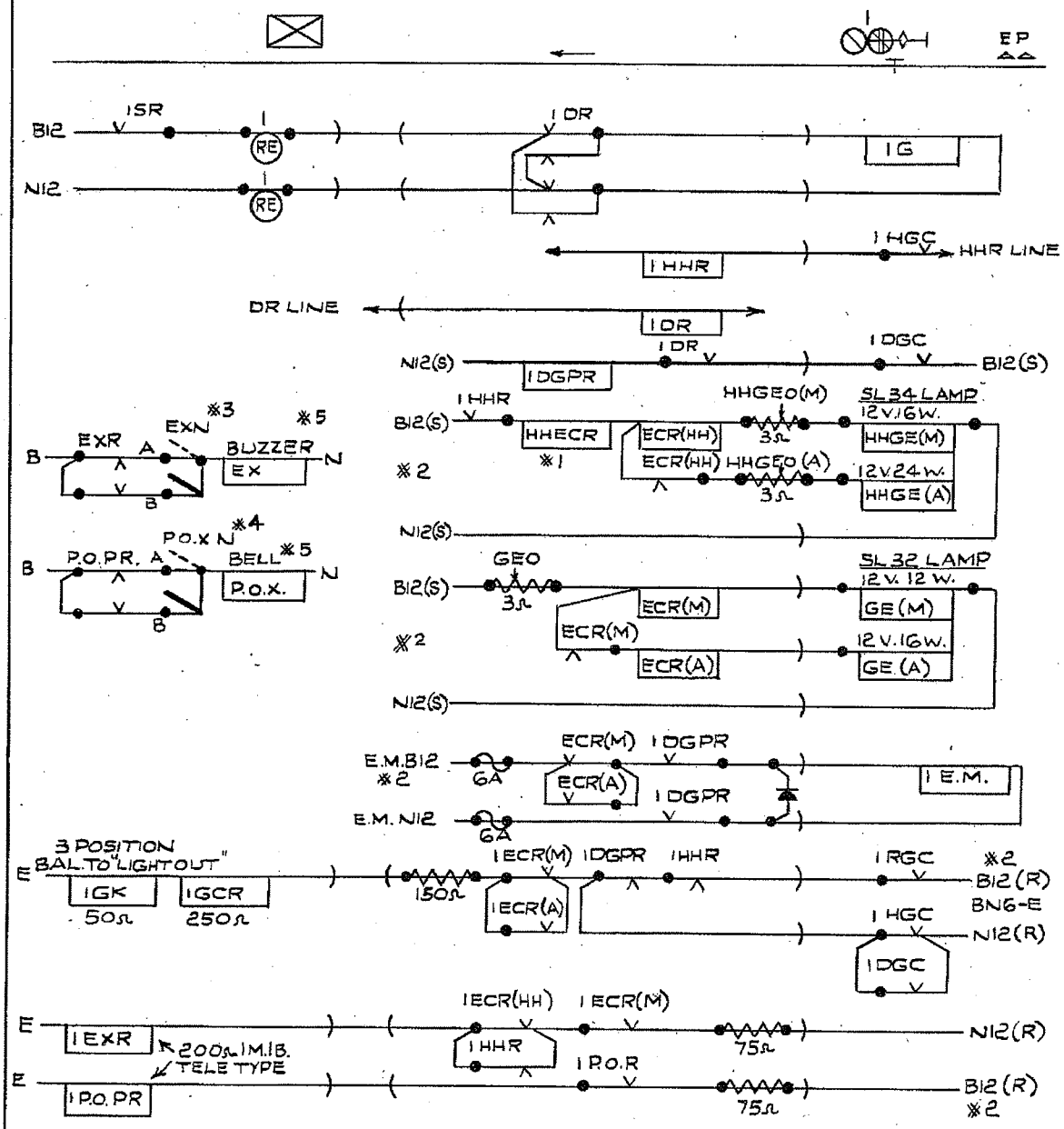

※1 HHECR REQUIRED ONLY FOR SIGNALS DISPLAYING A NORMAL YY ASPECT. (SEE S.W.D.429)

※2 POWER SUPPLY ARRANGEMENTS SHOWN ON S.W.D 429.

※3 EXN TO BE FIXED ABOVE GK & SWITCH POSITIONS MARKED A & B.

※4 POXN TO BE LABELLED "POWER SUPPLY FOR No 1 SIGNAL" & FIXED ADJACENT TO GK; SWITCH POSITIONS TO BE MARKED A&B.

※5 INDEPENDENT BUZZER & BELL TO BE FIXED AT REAR OF GK.

COLOUR LIGHT SIGNALS
SEARCHLIGHT TYPE
WITH LAMP PROVING
4-ASPECT SIGNAL

B.R. ~ E.R.
CHIEF S.&T. ENGINEER'S DEPT.

DRAWN BY H.C.	SWD 428
TRACED BY P.A.G.	
CHECKED BY RR	DATE 14-4-65

STANDARD WIRING DIAGRAM

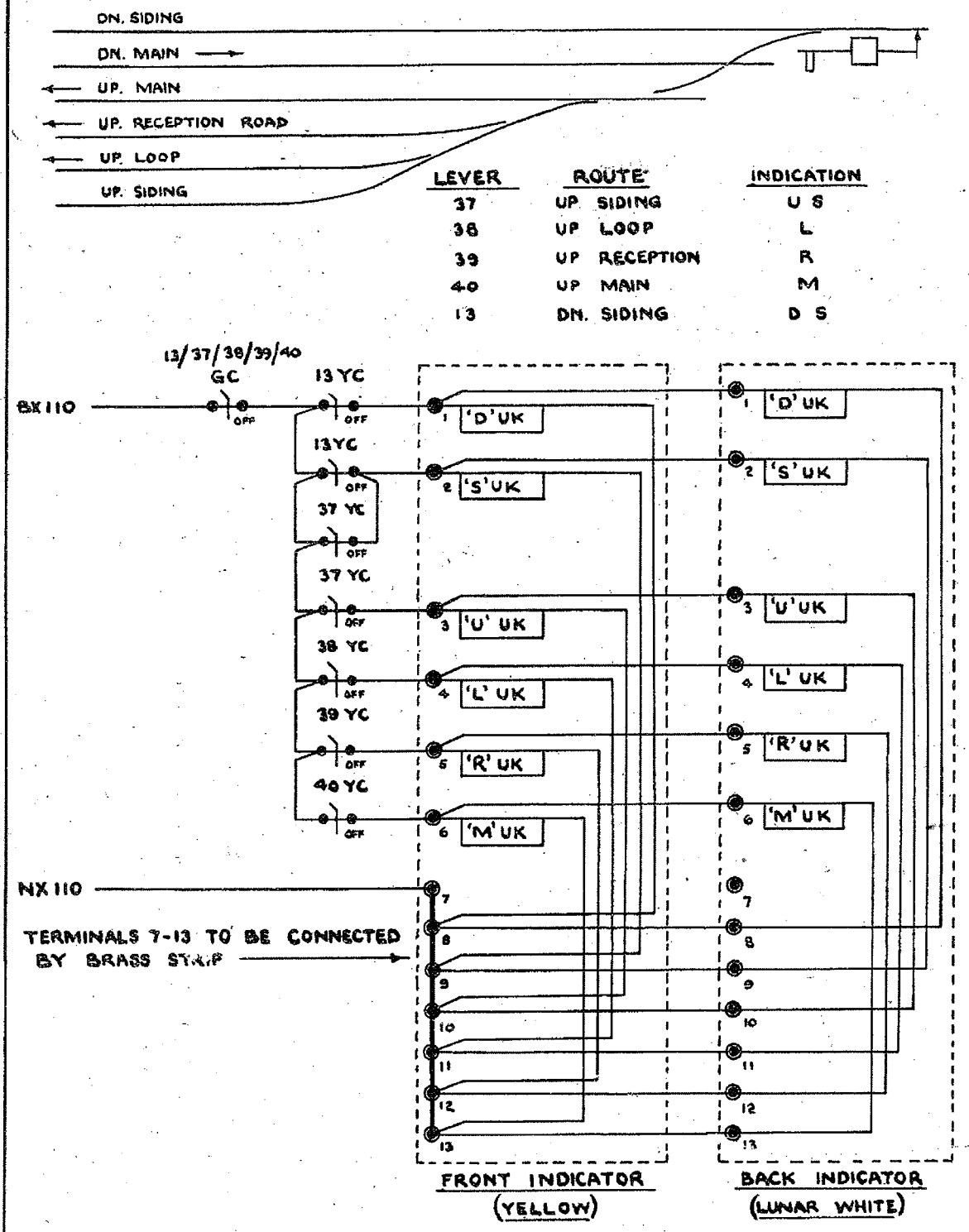

LEVER	ROUTE	INDICATION
37	UP SIDING	U S
38	UP LOOP	L
39	UP RECEPTION	R
40	UP MAIN	M
13	DN. SIDING	D S

2 - 110V 40W LAMPS USED FOR EACH INDICATION.

STENCIL TYPE ROUTE INDICATOR.
(DOUBLE SIDED)

ONE LEVER WITH MECHANICAL DETECTION USED FOR EACH ROUTE.

B.R. ~ E.R.
SIGNAL ENGINEERS OFFICE. KINGS CROSS.
DRAWN BY. G.W.B.
TRACED BY. J.R.S.
CHECKED BY. [illegible]
SWD430
DATE. 10-10-55.

STANDARD WIRING DIAGRAM

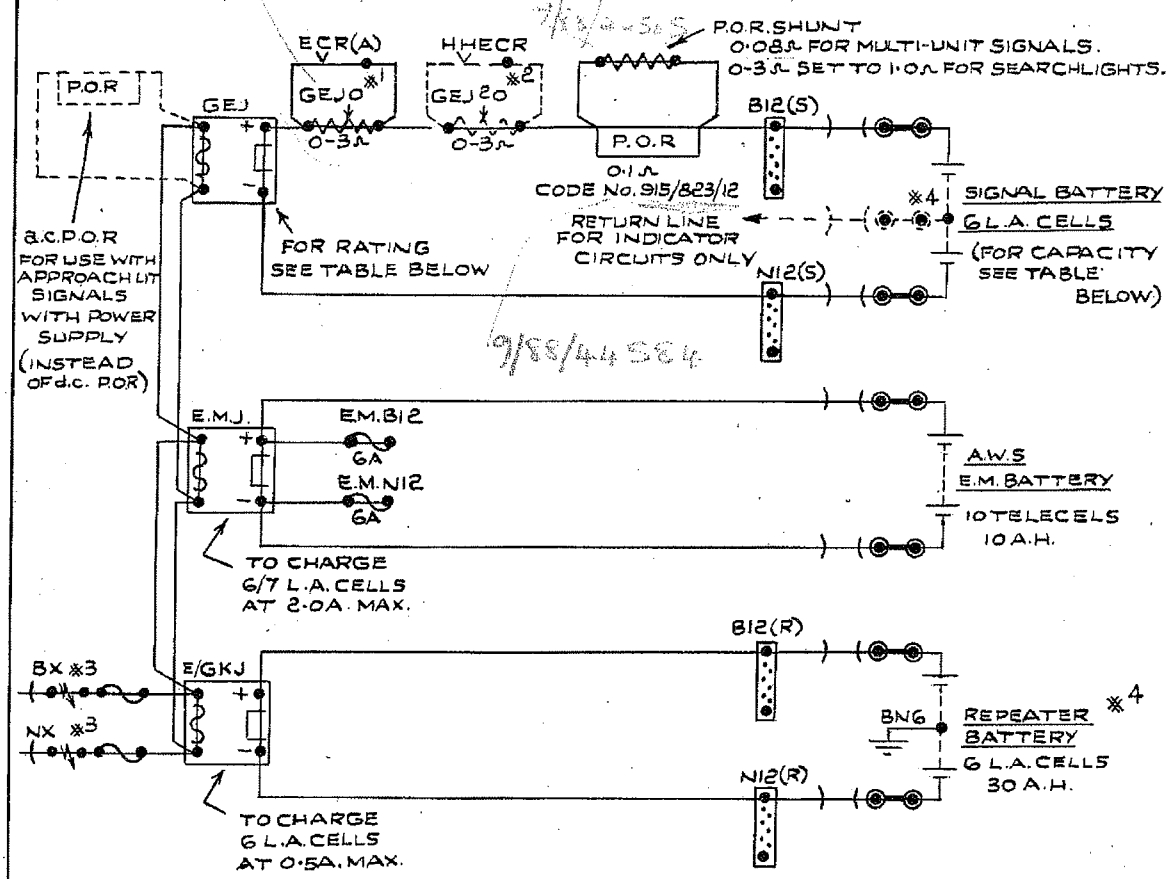

※1 GEJO REQUIRED FOR CONTINUOUSLY LIT MULTI-UNIT SIGNALS. RESISTOR TO BE ADJUSTED TO OBTAIN EQUAL TRICKLE CHARGING CURRENT IN BATTERY WHEN EITHER MAIN OR AUXILIARY FILAMENT IS IN USE.

※2. GEJ 2O & HHECR TO BE PROVIDED ONLY FOR 4-ASPECT SIGNALS DISPLAYING A NORMAL YY ASPECT. GEJ 2O TO BE ADJUSTED TO OBTAIN EQUAL TRICKLE CHARGING CURRENT IN BATTERY WHEN MAIN FILAMENTS OF EITHER SINGLE OR DOUBLE ASPECTS ARE IN USE.

※3 ARRESTERS FITTED WITH INSULATED COVERS (REQUIRED ONLY IF SUPPLY IS TAKEN FROM POLE ROUTE)

※4 WHERE CONTROL AND INDICATION LINES ARE ENTIRELY IN CABLE, REPEATER BATTERY TO BE OMITTED & SIGNAL BATTERY USED TO FEED INDICATOR CIRCUITS; CENTRE TAP ON SIGNAL BATTERY TO BE PROVIDED.

SIGNAL	BATTERY (20-HOUR RATE)	RECTIFIER	LAMP	LAMP TYPE
2/3-ASPECT SEARCHLIGHT	30 A.H.	2 AMP.	12V. 12/16 W	SL32
2/3-ASPECT MULTI-UNIT	60 A.H.	3 AMP.	2 OR 3 X 12V. 16/24 W	SL34
4-ASPECT SEARCHLIGHT (NORMALLY SINGLE ASPECT)	60 A.H.	3 AMP.	12V. 12/16W 12V. 16/24 W	SL32 SL34(YY)
(NORMALLY DOUBLE YELLOW)	75 A.H.	5 AMP.	12V. 12/16W 12V. 16/24W	SL32 SL34(YY)
4-ASPECT MULTI-UNIT (NORMALLY SINGLE ASPECT)	60 A.H.	3 AMP.	4 X 12V. 16/24W.	SL34
(NORMALLY DOUBLE YELLOW)	75 A.H.	5 AMP.	4 X 12V. 16/24W	SL34

COLOUR LIGHT SIGNALS WITH LAMP PROVING POWER SUPPLY ARRANGEMENTS

B.R.~E.R.
CHIEF S.&T. ENGINEER'S DEPT.

DRAWN BY H.C.
TRACED BY P.A.G
CHECKED BY RR

SWD 429

DATE 14.4.65

STANDARD WIRING DIAGRAM

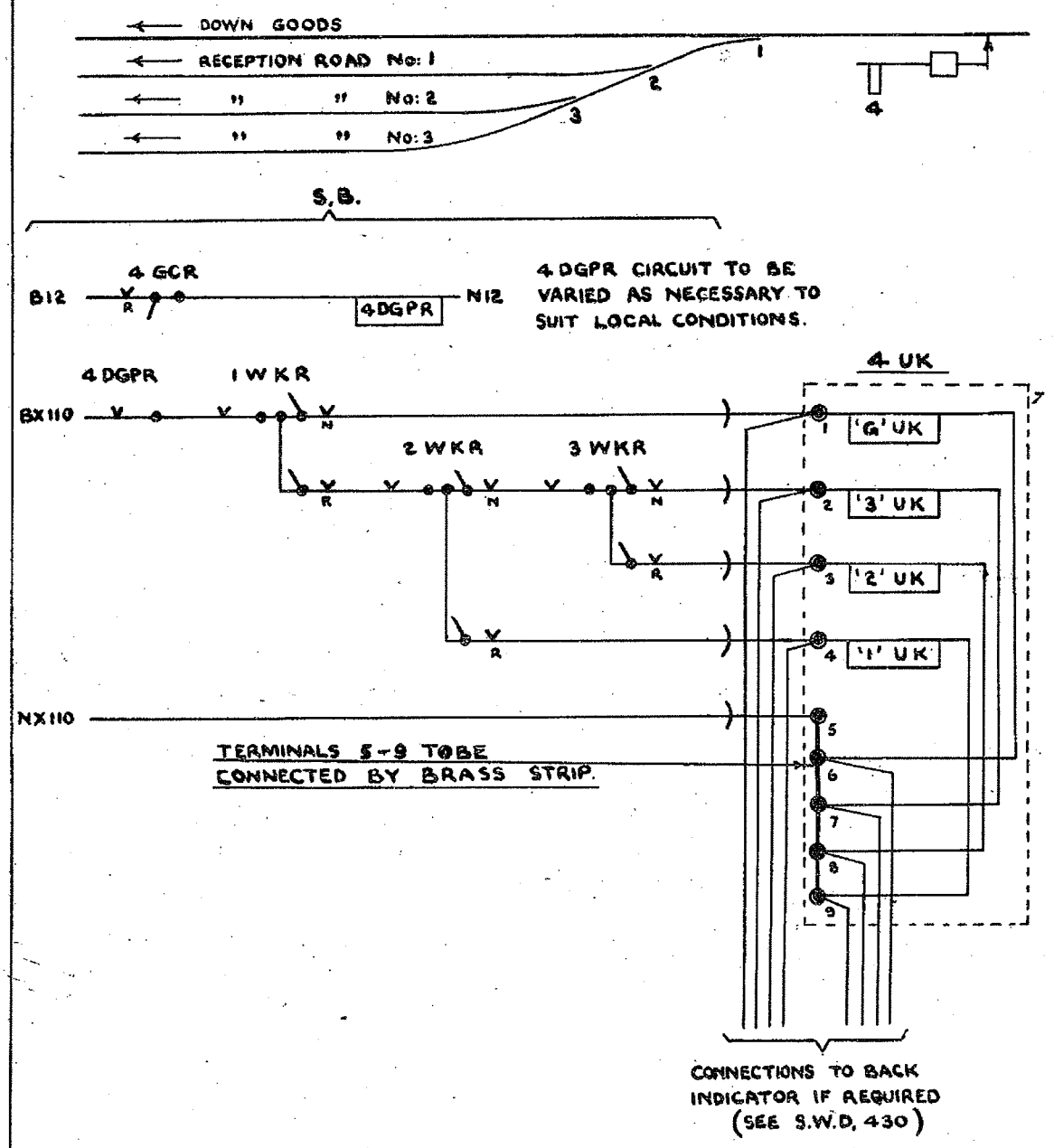

2~110V 40W LAMPS USED FOR EACH INDICATION.

STENCIL TYPE ROUTE INDICATOR

FOR USE WITH MECHANICAL SIGNAL & USING ELECTRICAL DETECTION.

B. R. ~ E. R.	
SIGNAL ENGINEERS OFFICE. KINGS CROSS.	
DRAWN BY. G.W.B.	SWD431
TRACED BY. J.R.S.	
CHECKED BY.	DATE. 10-10-55.

STANDARD WIRING DIAGRAM

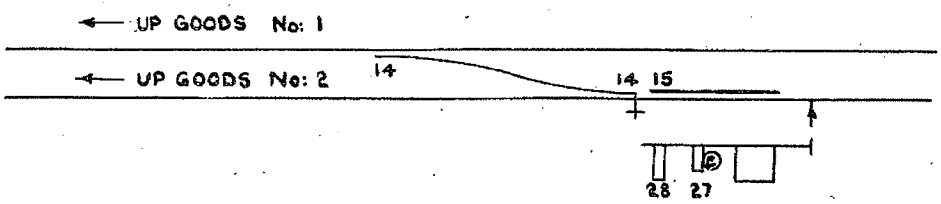

ROUTE LEVER	DETECTS MECHANICALLY	ROUTE	INDICATION
25	14N, 15 R.	UP GOODS No.2.	G 2
26	14R, 15 R.	UP GOODS No.1.	G 1

SIGNAL LEVER	
27	14N or R. 15R.
28	14N or R. 15R.

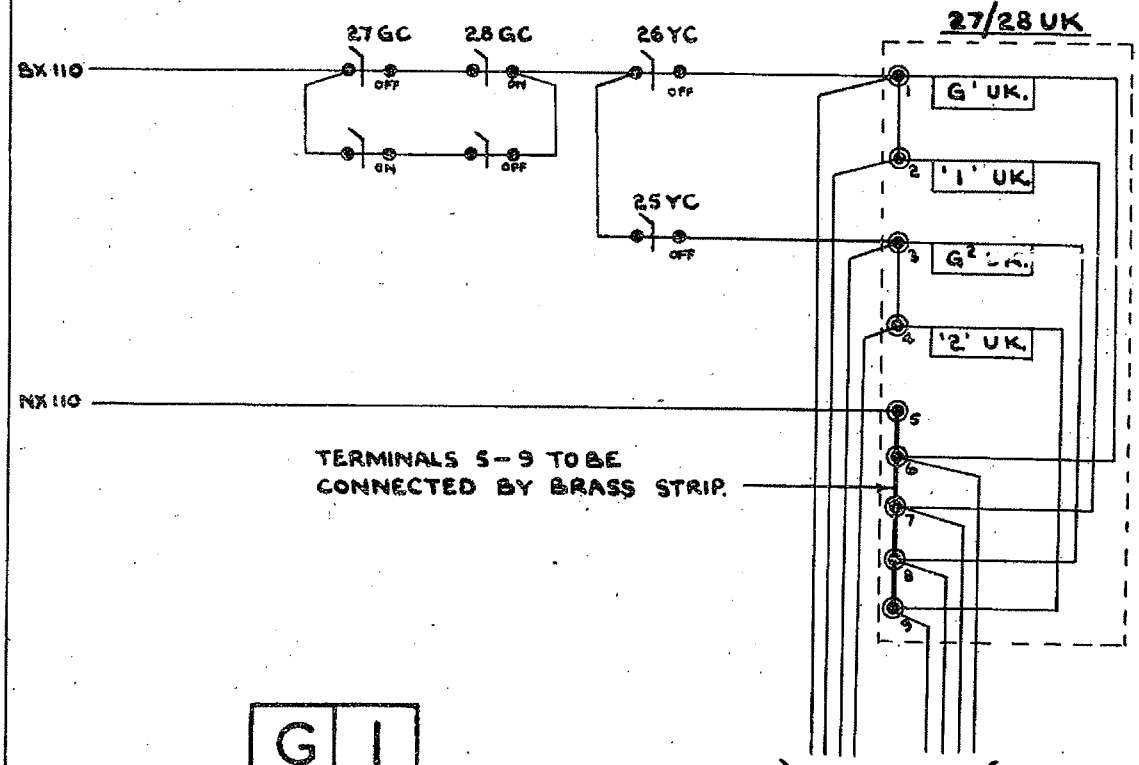

G	1
G	2

ARRANGEMENT OF LETTERS.

2 – 110V 40W LAMPS USED FOR EACH INDICATION

STENCIL TYPE ROUTE INDICATOR

FOR USE WITH MAIN & SUBSIDIARY SIGNALS USING MECHANICAL DETECTION & SEPARATE ROUTE LEVERS.

B.R. ~ E.R.

SIGNAL ENGINEERS OFFICE. KINGS CROSS

DRAWN BY. G.W.B

TRACED BY. J.R.S.

CHECKED BY

SWD 432

DATE. 10-10-55.

STANDARD WIRING DIAGRAM

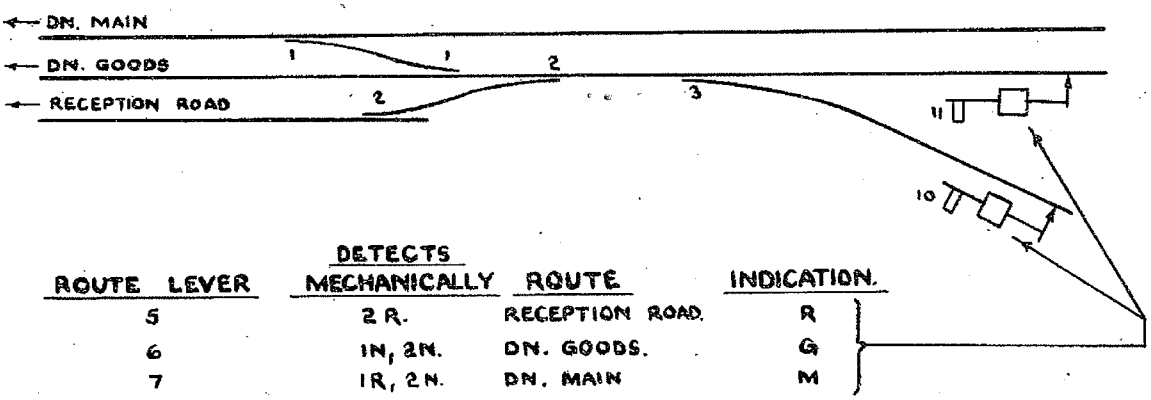

ROUTE LEVER	DETECTS MECHANICALLY	ROUTE	INDICATION.
5	2 R.	RECEPTION ROAD.	R
6	1N, 2N.	DN. GOODS.	G
7	1R, 2N.	DN. MAIN	M

IF LEVERS 10 & 11 NOT AVAILABLE. SIGNAL ARM SELECTED BY No: 3 POINTS

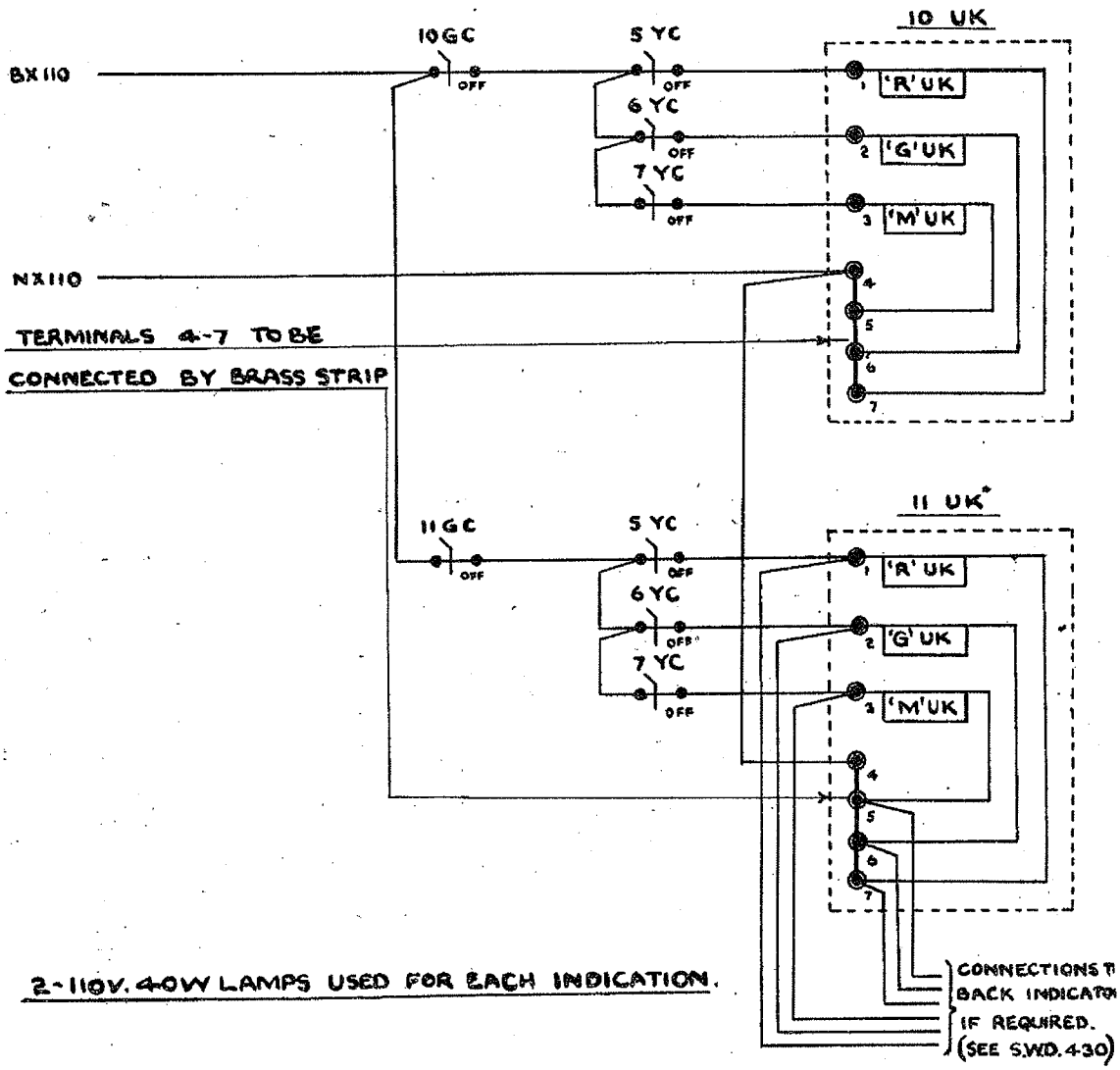

2-110V. 40W LAMPS USED FOR EACH INDICATION.

STENCIL TYPE ROUTE INDICATOR
FOR USE WITH CONVERGING SIGNALS
ROUTE INDICATION SELECTED BY ROUTE
LEVERS WITH MECHANICAL DETECTION.
(WIRE OPERATED)

B.R. ~ E.R.
SIGNAL ENGINEERS OFFICE. KINGS CROSS
DRAWN BY. G.W.B.
TRACED BY. J.R.S.
CHECKED BY. [illegible]
SWD 433
DATE. 10-10-55.

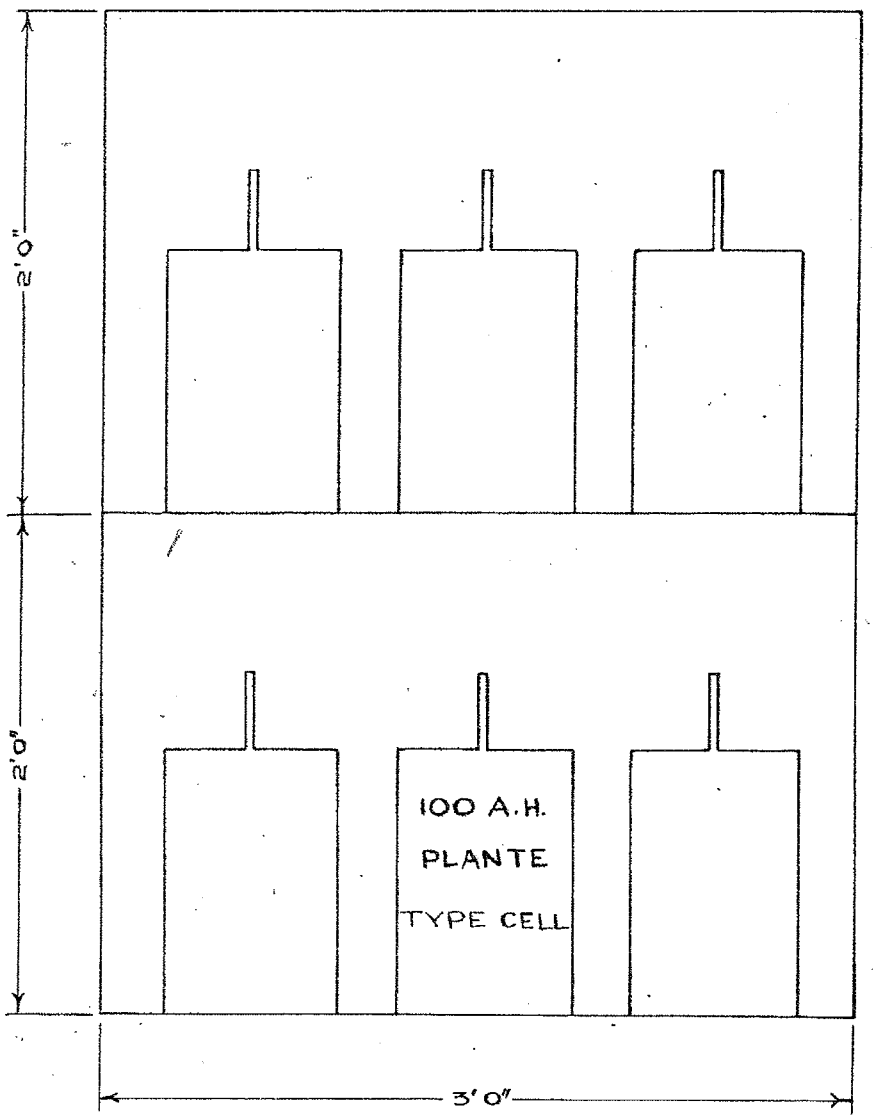

MEASUREMENTS ARE ALL INSIDE MEASUREMENTS.

ADEQUATE VENTILATION TO BE PROVIDED

SHELVES TO BE REINFORCED AS NECESSARY

WEIGHT OF EACH 100 A.H. CELL WHEN FILLED WITH ACID IS 62lbs. APPROX.

INTERNAL DEPTH OF CUPBOARD TO BE 13½".

CELLS TO BE COUPLED TOGETHER BY FLEXIBLE CONDUCTORS TO PREVENT DAMAGE DUE TO VIBRATION. RIGID CONNECTORS MUST NOT BE USED.

see ERST 37/(4/62)
for Full Details
see SSLS. 977

BATTERY CUPBOARD FOR 2 ARM JUNCTION INDICATOR FED FROM TRICKLE CHARGER

B.R.–E.R.	
SIGNAL ENGINEERS OFFICE, KINGS X.	
DRAWN BY G.W.B.	FOR ATTACHMENT TO S.W.D. 439.
TRACED BY H.J.R.	
CHECKED BY.	DATE. 25·11·55.

A	14.4.65	H.C.

REDRAWN. P.O.R. & SIGNAL LAMP PROVING ADDED. RR

STANDARD WIRING DIAGRAM

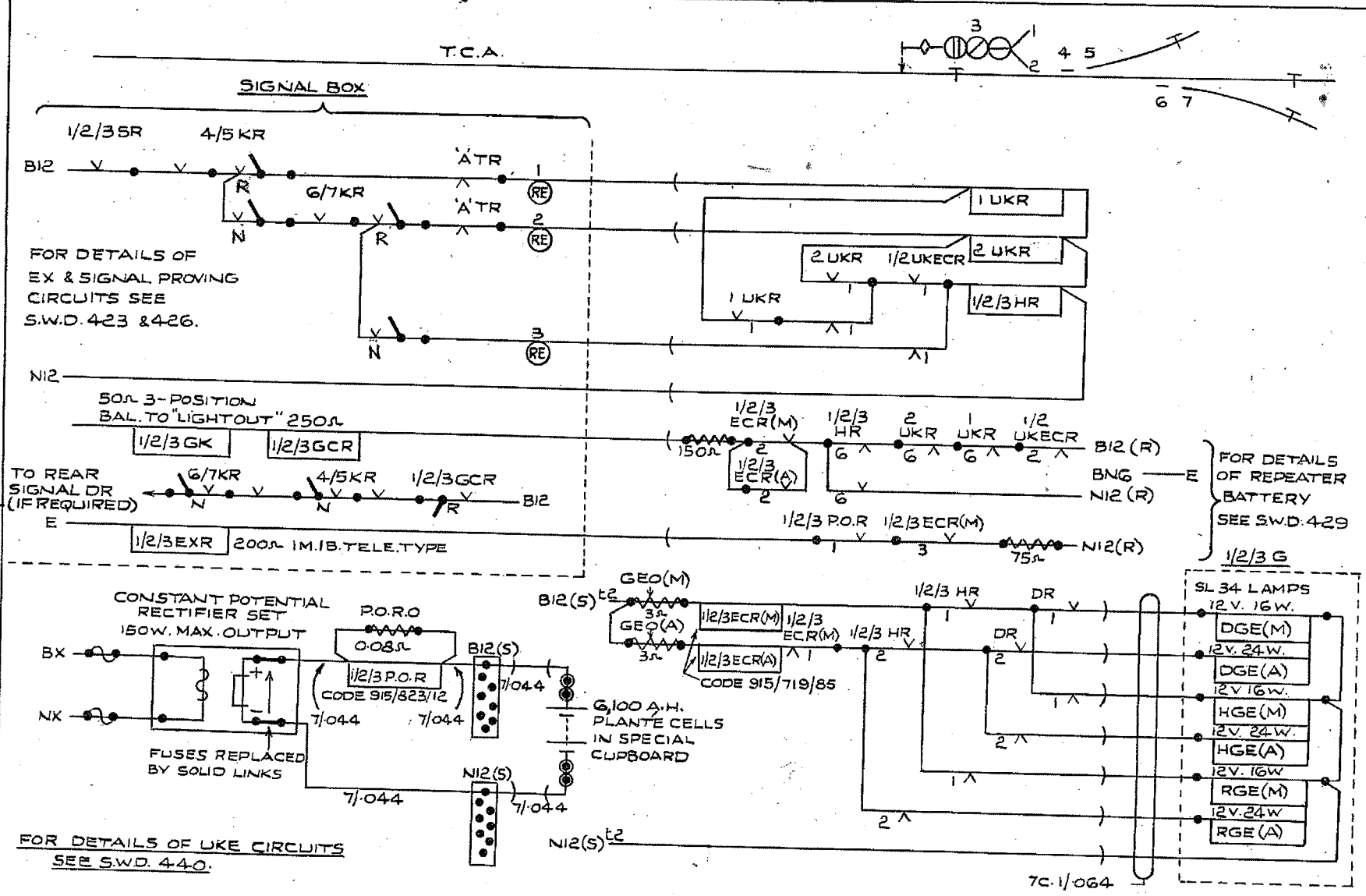

2-ARM JUNCTION INDICATOR FED FROM TRICKLE CHARGED BATTERY. CONTROL CIRCUIT.

BRITISH RAILWAYS-EASTERN REGION
SIGNAL ENGINEER'S OFFICE, KINGS CROSS STATION, LONDON, N.1.

DRAWN BY G.W.B.
TRACED BY R.S.T.
CHECKED BY N.M.
DATE 21.1.55.

SWD 439A

A	14.4.65	H.C.

B12(S)/N12(S) TERMINALS ADDED.

RR

STANDARD WIRING DIAGRAM

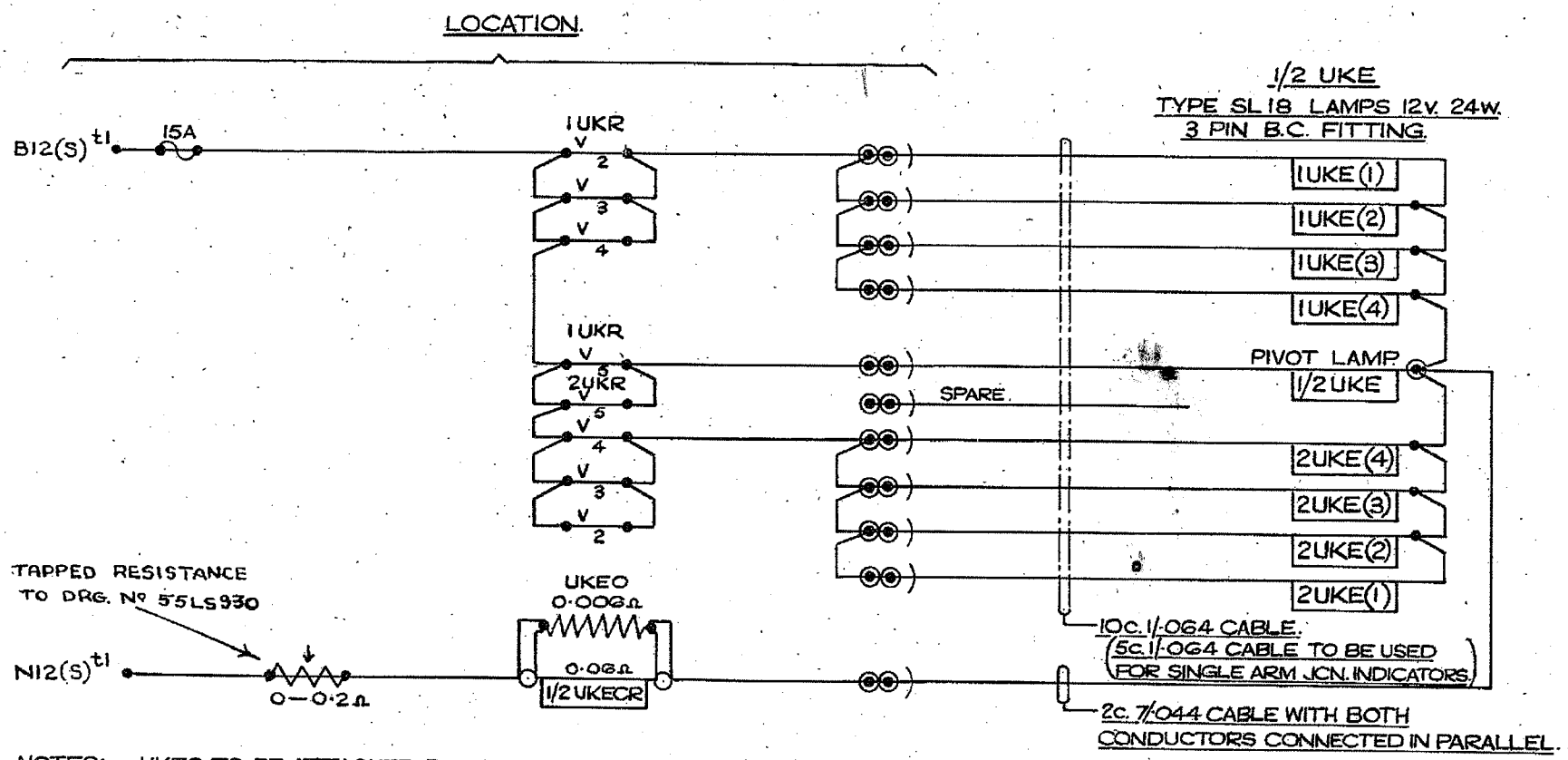

NOTES:- UKEO TO BE ATTACHED DIRECT TO TERMINALS OF 1/2 UKECR.
THE 2c. 7/·044 CONDUCTORS TO BE TERMINATED WITH LUGS.
1/·064 WIRE TO BE USED FOR LOCATION WIRING OF UKE CIRCUITS.
LOCATION TO BE KEPT WITHIN 30YDS OF JCN. INDICATOR & SPECIAL CONSIDERATION SHOULD BE GIVEN TO THE SIZE OF CONDUCTORS WHEN THIS DISTANCE IS EXCEEDED.

See FCST 29/8/62

2 ARM JUNCTION INDICATOR FED FROM TRICKLE CHARGED BATTERY. LIGHTING CIRCUIT.

BRITISH RAILWAYS – EASTERN REGION
SIGNAL ENGINEER'S OFFICE
KINGS CROSS STATION, LONDON, N.1.

DRAWN BY G.W.B.
TRACED BY R.S.T.
CHECKED BY N.M.

SWD.440 A

DATE. 21·1·55

B 10/9/40 J.O.G.	C 15/3/46 J.O.G.	D 22-2-49 R.S.F.	21-8-49 B	A 8-8-52 J.A.B.
TELEPHONE REFERENCE ALTERED B J.O.G. ITEM REFERENCE ALTERED	RE-DRAWN. CATCH HANDLE CONTACTS REPLACED BY PLUNGERS.	ITEM 2 CIRCUIT REVISED TO INCLUDE ECONOMISER AT G.F. IN LR. CIRCUIT.	FORMERLY S.W.D.1. TELEPHONE NOTE AMENDED.	NOTES REGARDING RETURNS ADDED.

STANDARD WIRING DIAGRAM

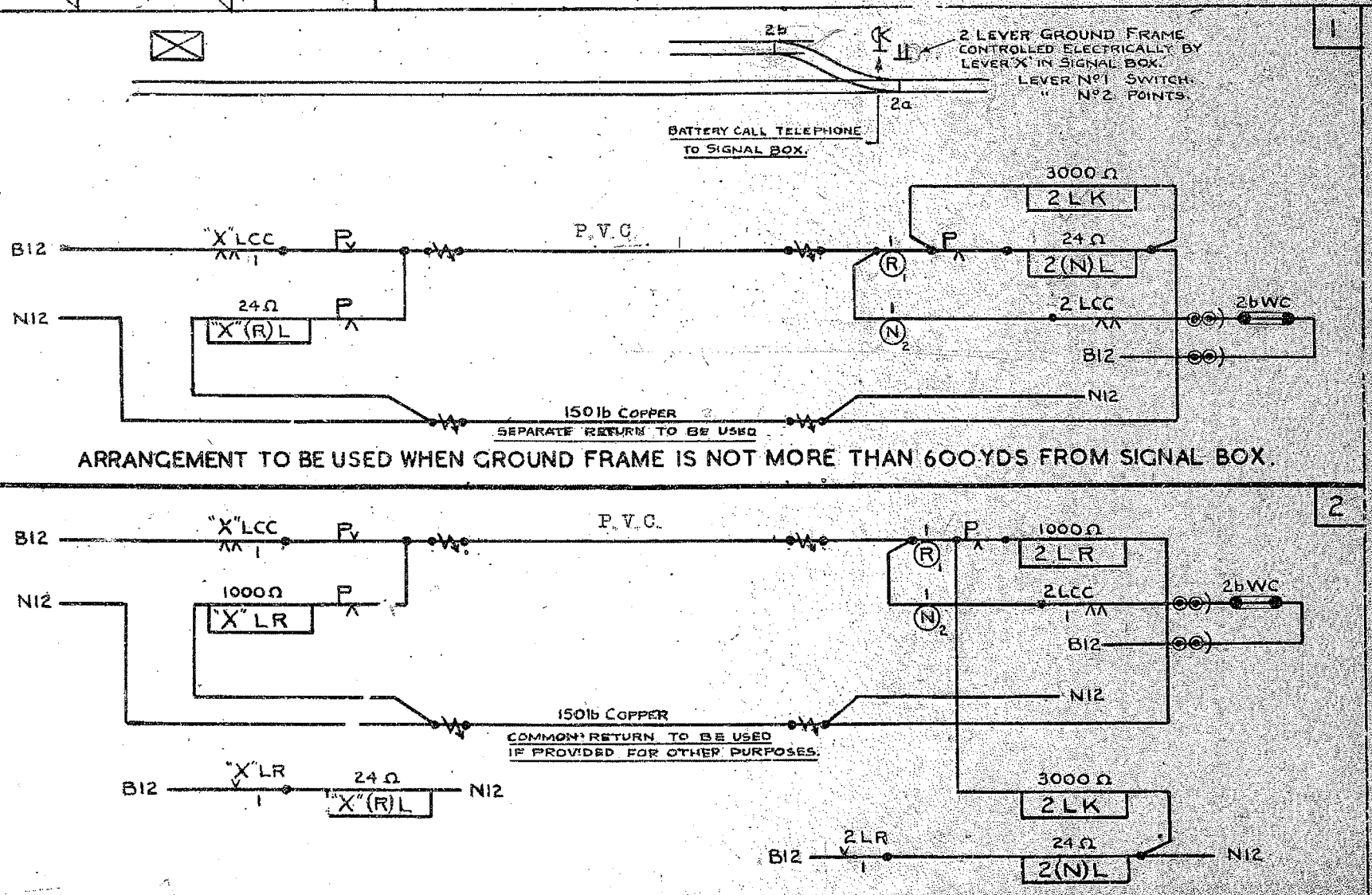

STANDARD GROUND FRAME CONTROL CIRCUITS.

L.N.E.R. SOUTHERN AREA
SIGNAL & TELEGRAPH ENGINEERS OFFICE
KINGS CROSS STATION, N.1.

DRAWN BY J.R.McL
TRACED BY J.O.G.
CHECKED BY
DATE 17.7.40.

SWD 44

STANDARD WIRING DIAGRAM

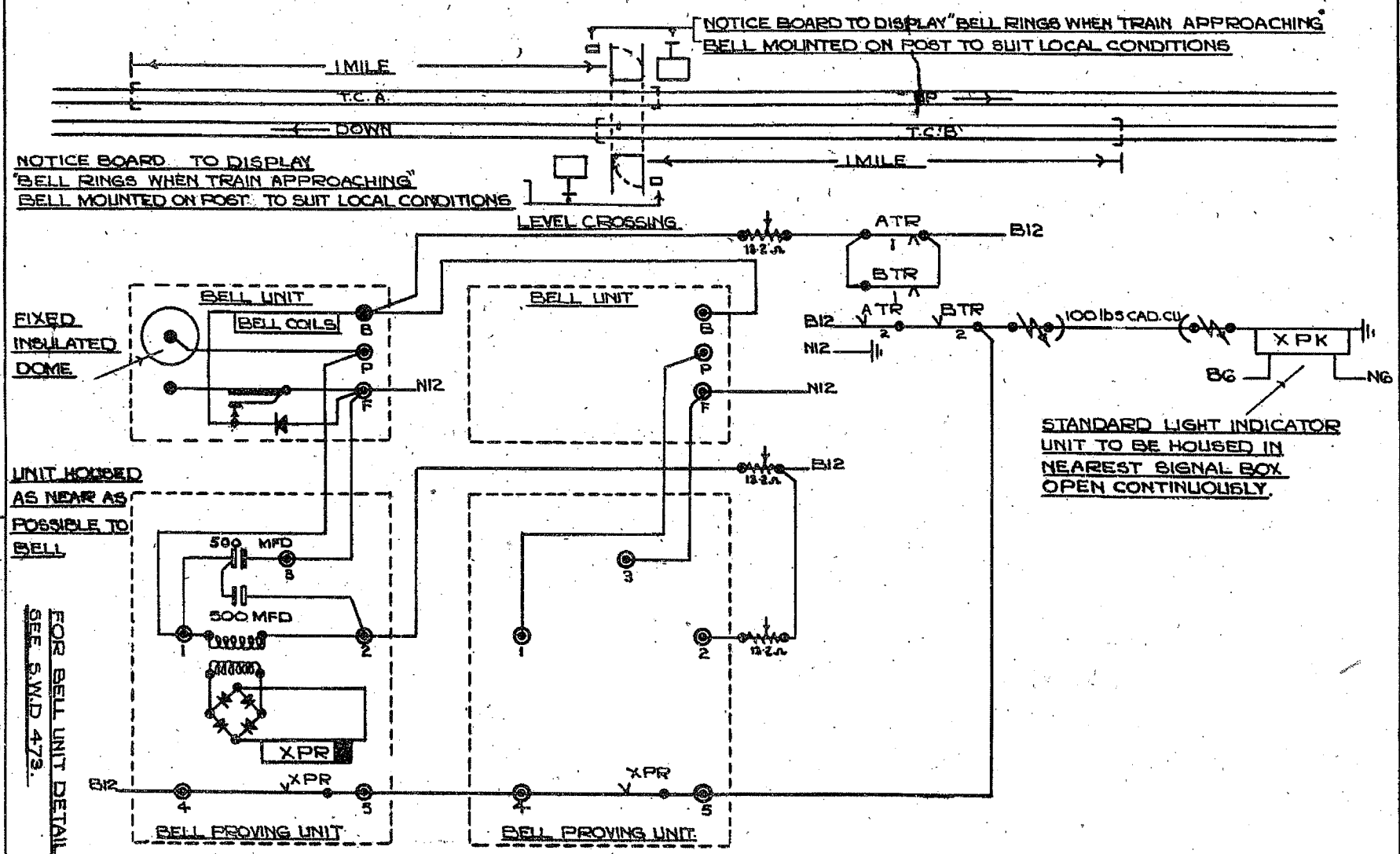

LEVEL CROSSING AUDIBLE WARNING FOR USE ON DOUBLE LINES.

B.R. ~ E.R.
SIGNAL ENGINEERS DEPT.
KINGS CROSS STATION.

DRAWN BY B.O.B.
TRACED BY
CHECKED BY
DATE: 19·8·53

SWD 451

STANDARD WIRING DIAGRAM

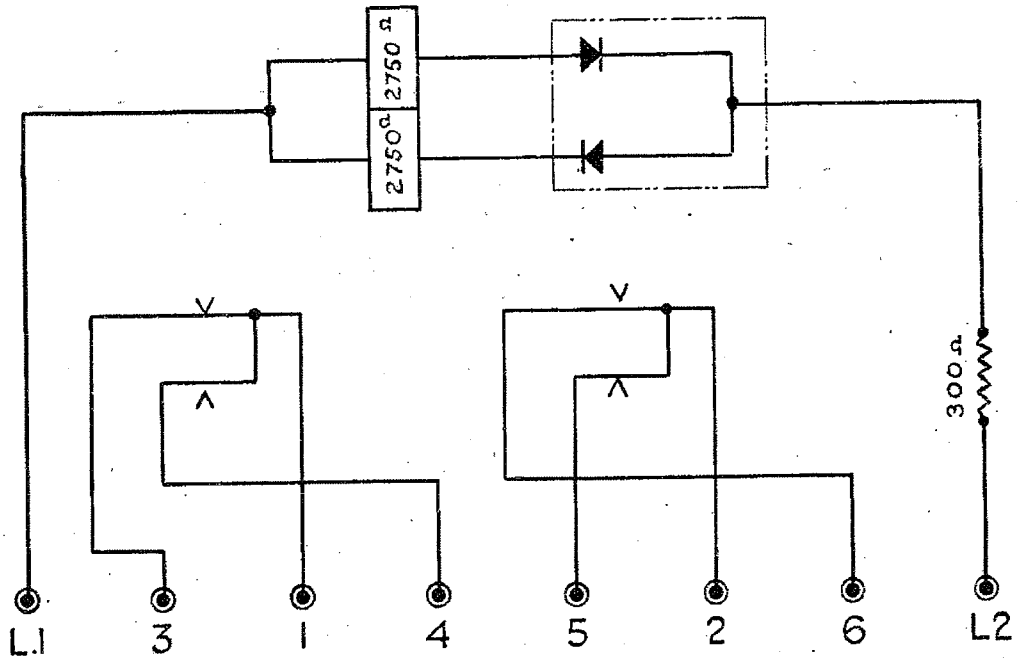

110v. TYPE

S.T.C. APPARATUS UNIT No. LA.2102/6

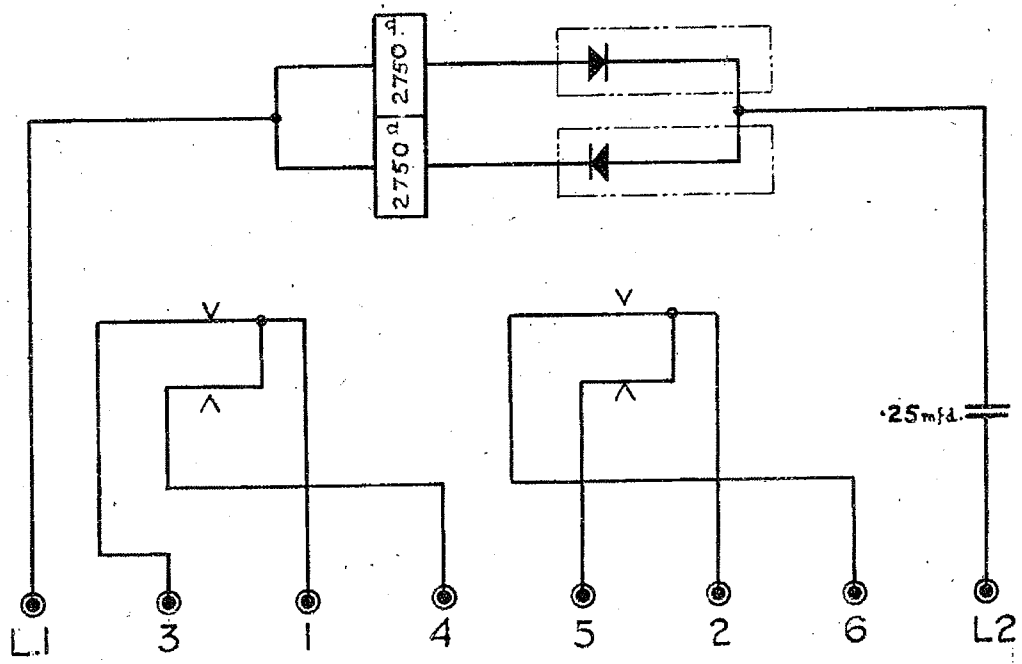

230v. TYPE

S.T.C. APPARATUS UNIT No. LA 2102/12

21.9.50	A	3.8.51	NM	TYPE No. & RESISTANCE CHANGED. CAPACITOR PROVIDED FOR 230v. TYPE. NM	
FORMERLY S.W.D. 45					

"POWER OFF" RELAYS

STANDARD TELEPHONE & CABLE Co's TYPES

L.N.E.R. SOUTHERN AREA.
SIGNAL & TELEGRAPH ENGINEER'S OFFICE
KING'S CROSS STATION. N.1.

DRAWN BY S.T.&C. LTD
TRACED BY T.W.E.
CHECKED BY
DATE 14. 5. 41.

S.W.D.461A

A	27·3·50	ARB

THERMAL CONTACTS MADE INDEPENDENT N.M.

STANDARD WIRING DIAGRAM

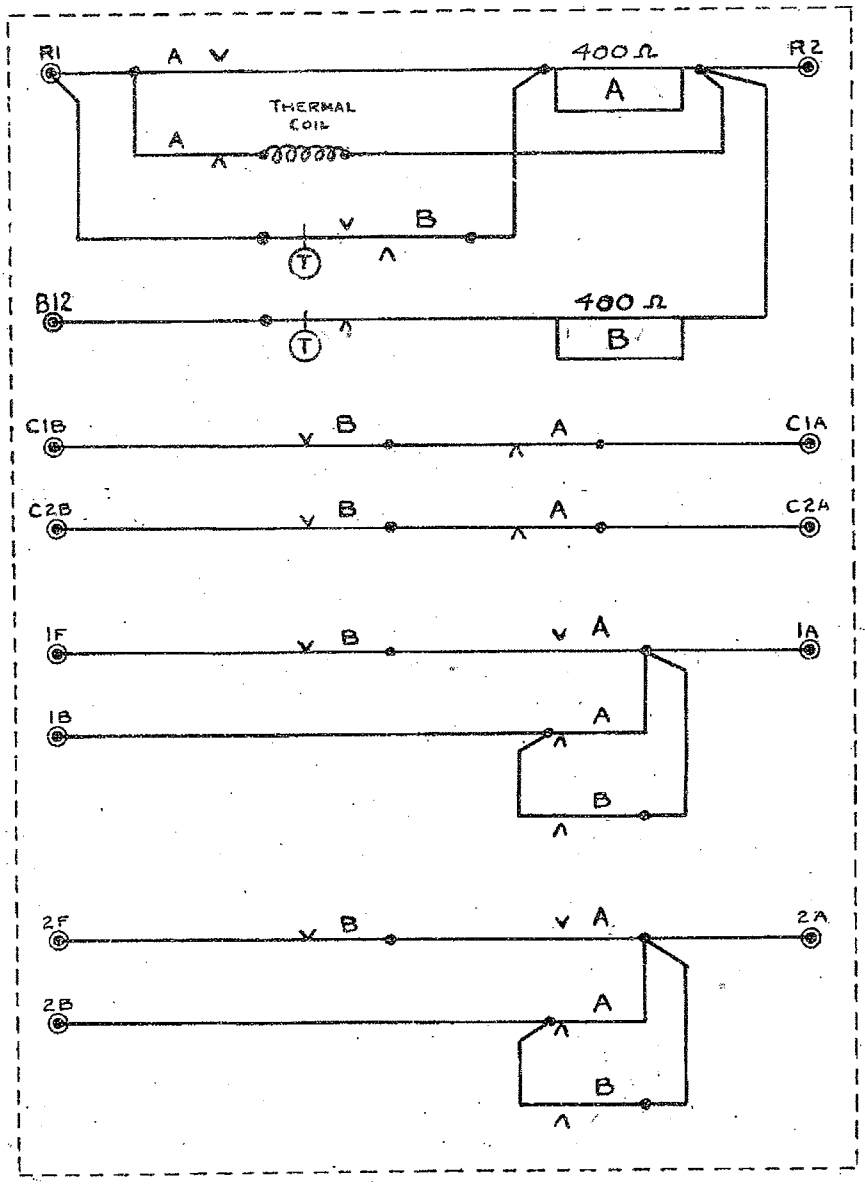

TIME RELAY

THERMAL TYPE

L.N.E.R. SOUTHERN AREA. SIGNAL & TELEGRAPH ENGINEER'S OFFICE KINGS CROSS STATION, N.1.	
DRAWN BY J.O.G.	SWD462
TRACED BY	
CHECKED BY N.M.	DATE 8-4-49

B	10·6·50	N.D.A.

STANDARD WIRING DIAGRAM

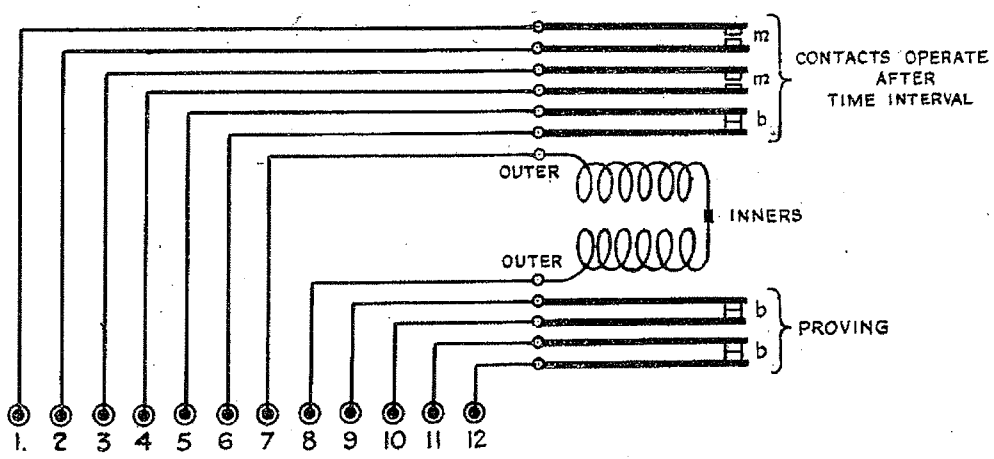

RESISTANCE OF COILS :- 10Ω + 10Ω

12v. TYPE

S.T.C. APPARATUS UNIT No. 4004A

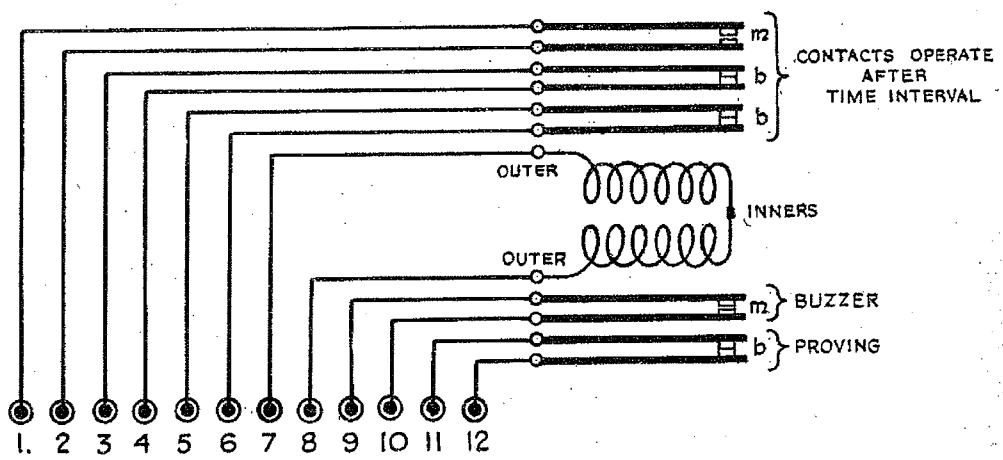

RESISTANCE OF COILS :- 150Ω + 150Ω

50v. TYPE

S.T.C. APPARATUS UNIT No. 4004B

TIME RELAYS

STANDARD TELEPHONE & CABLE Co's. TYPES

L.N.E.R. SOUTHERN AREA.
SIGNAL & TELEGRAPH ENGINEER'S OFFICE
KINGS CROSS STATION, N.1.

DRAWN BY S.T.&C. LTD.	S.W.D. 463
TRACED BY T.W.E.	
CHECKED BY	DATE 16. 5. 41.

FORMERLY S.W.D. 47.

STANDARD WIRING DIAGRAM

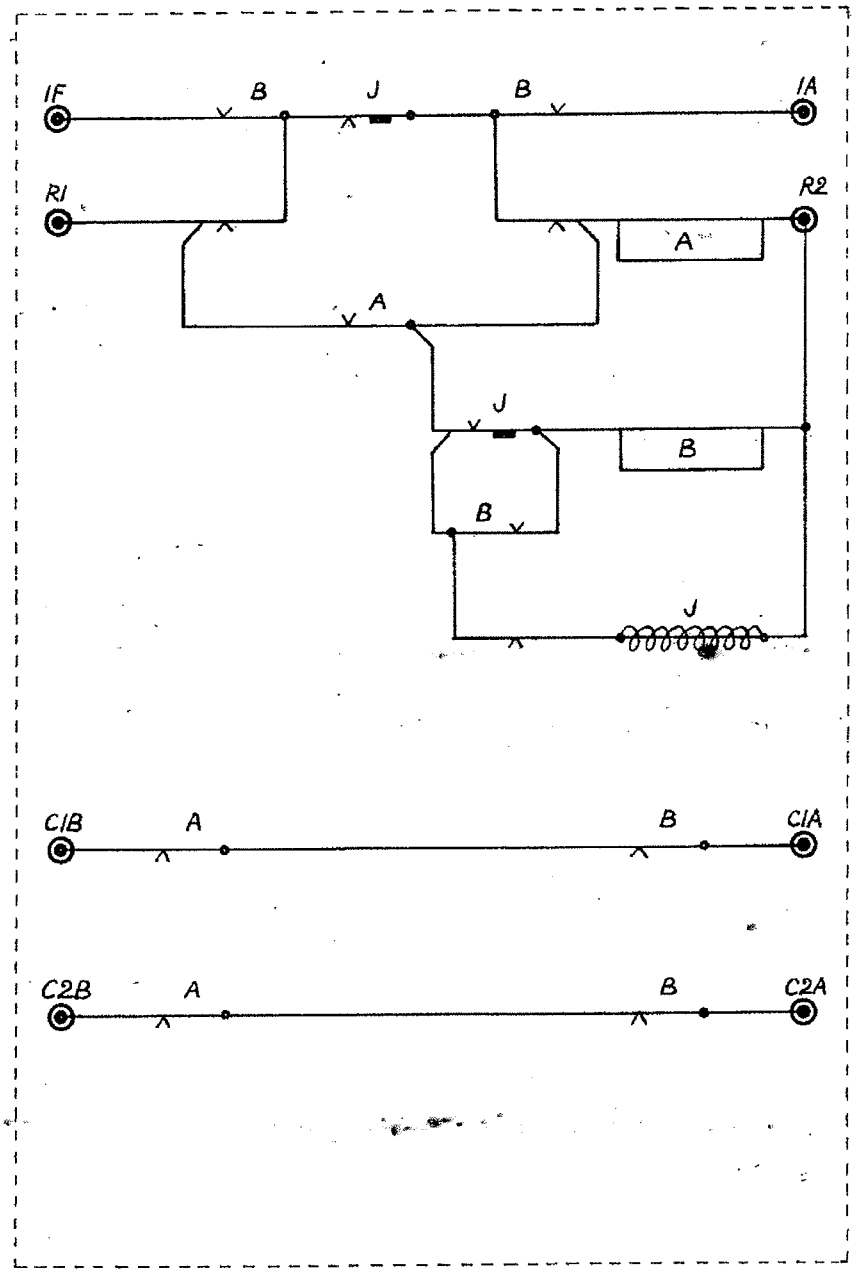

TIME RELAY.

THERMAL TYPE WITH ONE OPERATED CONTACT & TWO PROVING CONTACTS.

B.R. ~ E.R.

SIGNAL ENGINEERS DEPT.
KINGS CROSS

DRAWN BY N.M.	SWD464
TRACED BY R.W.N	
CHECKED BY NM	DATE 1·6·56

STANDARD WIRING DIAGRAM

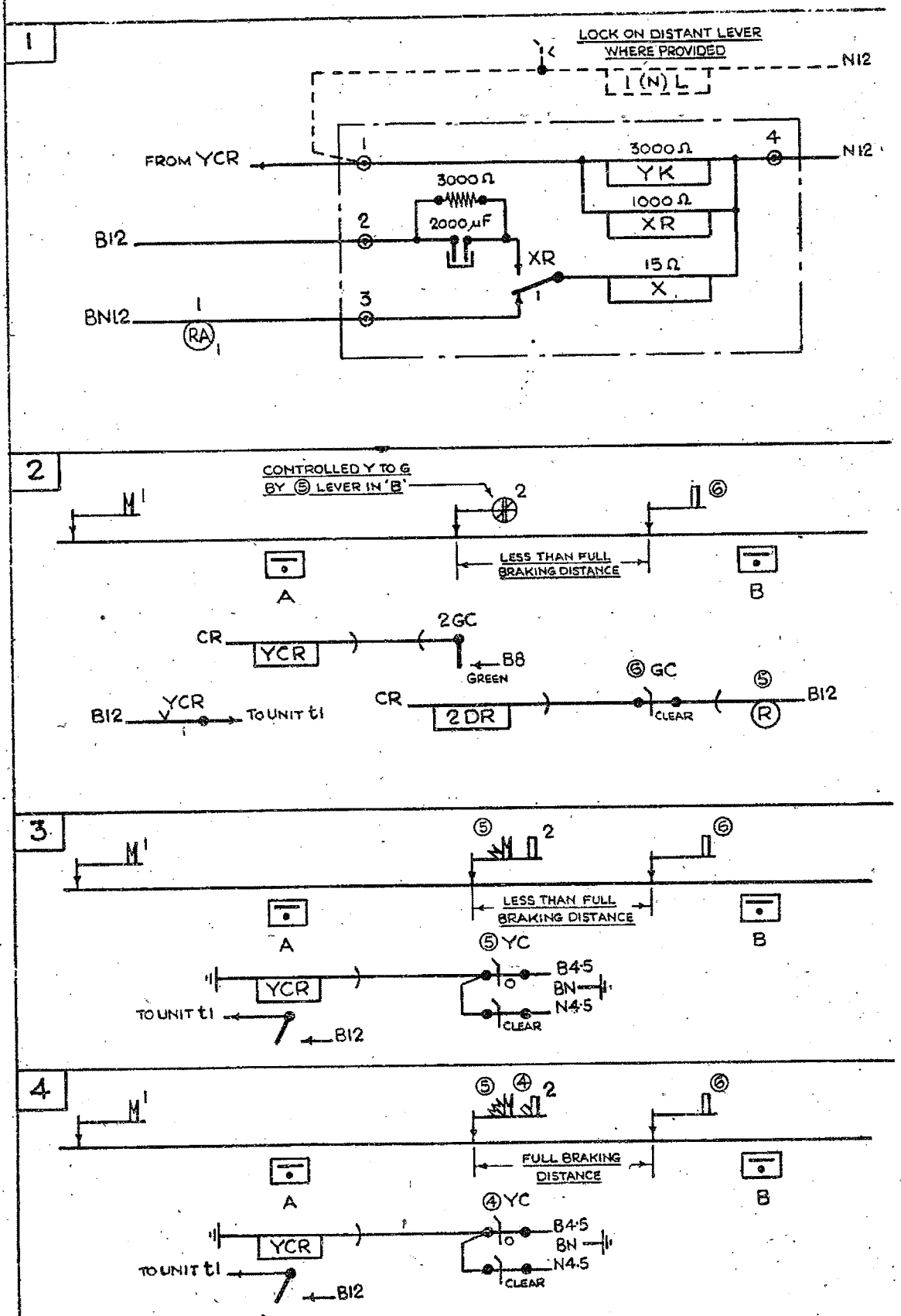

INDICATOR & AUDIBLE WARNING UNIT FOR USE WITH ELECTRICAL DISTANT INDICATOR WORKING

1. WIRING OF UNIT
2.3.4. TYPICAL APPLICATIONS

L.N.E.R. SOUTHERN AREA.
SIGNAL & TELEGRAPH ENGINEER'S OFFICE
KINGS CROSS STATION, N.1.

DRAWN BY	SWD 471
TRACED BY	
CHECKED BY	DATE 11.5.45

FORMERLY SWD 57.

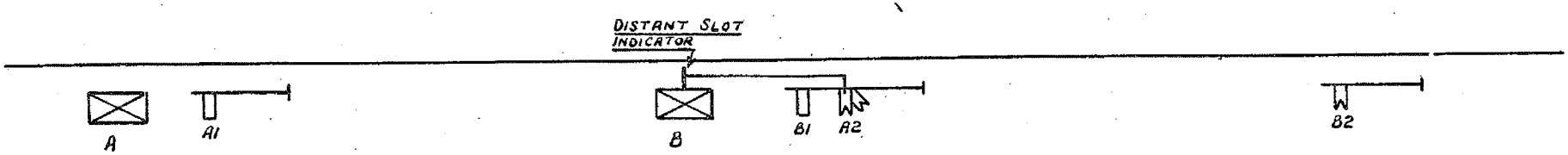

(A)

OLD G.E. SECTION BTR Nº 34. STATES THAT, WHERE DISTANT INDICATOR WORKING IS IN FORCE, THE STOP SIGNAL B1 SHALL NOT BE PULLED UNTIL THE SLOT INDICATOR SHOWS "OFF", OR UNTIL THE TRAIN HAS PASSED THE DISTANT B2. BY MECHANICAL LOCKING THE DISTANT B2 CANNOT THEREFORE BE PULLED. THE OBJECT IS TO PRESERVE SEQUENCE OF ASPECTS, SINCE IF B1 WERE VISIBLE TO A DRIVER APPROACHING B2 HE WOULD SEE B1 AT GREEN AND B2 AT YELLOW.

ON THE G.N. & G.C. SECTIONS THIS BTR IS NOT NUMBERED, BUT IS PASTED IN THE BACK OF COPIES OF B.T.R^S ISSUED TO BOXES.

MECHANICAL DISTANT INDICATOR WORKING.

FOR ATTACHMENT TO SWD 471

SLOT INDICATOR ARRANGEMENT WHERE MECHANICAL DISTANT CANNOT BE PULLED UNTIL COLOUR LIGHT STOP SIGNAL SHOWS DOUBLE YELLOW.

(B)

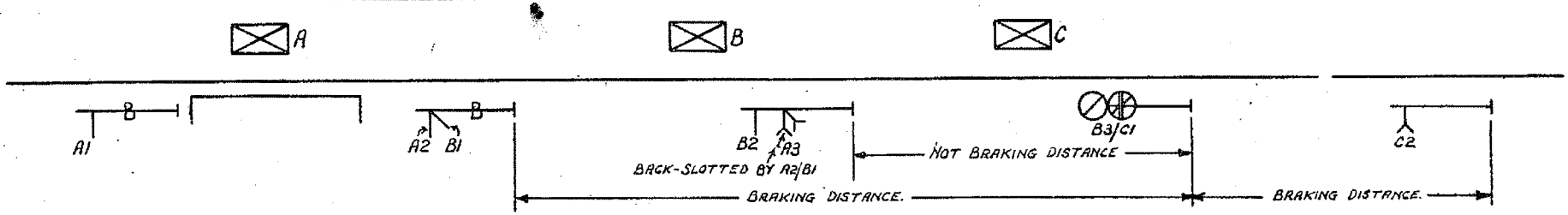

NOTES

B1 CONTROLLED BY L.C. TO PROVE OVERLAP CLEAR (UNLESS 440 YD TRACK EXISTS AHEAD.) DOUBLE YELLOW ASPECT WOULD NOT BE REQUIRED IF BRAKING DISTANCE FORWARD FROM B3/C1 EXTENDED TO A1 (BECAUSE UNDER THESE CONDITIONS A2/B1 WOULD HAVE TO BE "OFF" TO GIVE DOUBLE YELLOW, AND UNDER RULE 39A IT COULD NOT BE "OFF" WITH A1 "ON") UNLESS RULE 39A IS RELAXED AT THE PLACE IN QUESTION, FOR TRAINS BOOKED TO STOP IN THE STATION.

THE SAME CIRCUIT IS USED FOR SEARCHLIGHT OR MULTI-UNIT SIGNAL.

B3 INDICATOR SHOWING "OFF" IN "B", IF B1 ARM IS "ON" WAS AGREED TO BY MR HEBDEN 21/11/49, WHO REQUESTED THIS ARRANGEMENT FOR MIDLAND CROSSING BOX.

THE PURPOSE OF THE ARRANGEMENT IS TO ENABLE THE SIGNALMAN AT "C" TO CARRY OUT THE INSTRUCTION SHOWN ON SHEET A (i.e. HE MUST NOT PULL C1 UNTIL C2 IS FREE TO BE PULLED.) UNLESS C2 YK WERE PROVIDED HE WOULD NOT KNOW WHEN C2 WAS FREE TO BE PULLED, WITHOUT FIRST PULLING C1 LEVER TO ENERGISE THE HH/DGCR. IF B1, B2 & A3 ARE PULLED, BUT NOT B3, ASPECT SEQUENCE WILL BE B3 AT SINGLE YELLOW, AND A3 AT GREEN i.e. WRONG SEQUENCE. IF "C1" INDICATOR IS PROVIDED, THEREFORE, ANOTHER INDICATOR SHOULD LOGICALLY BE PROVIDED IN BOX "A", SO THAT A3 IS NOT PULLED UNTIL THE INDICATOR SHOWS THAT B3 HAS BEEN PULLED.

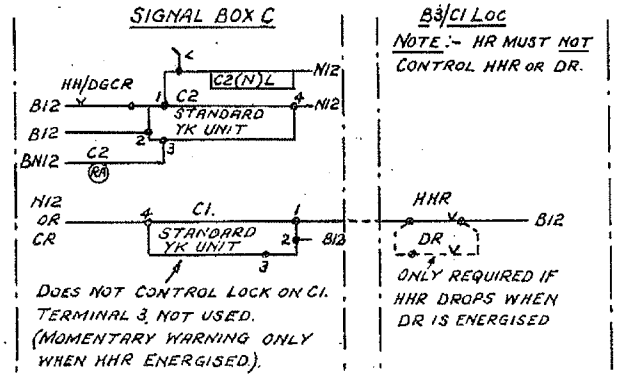

SIGNAL	CONTROLLED TO	BY
B3/C1.	Y	C1 LEVER REVERSED
	YY	B2 ARM OFF & B3 LEVER REV
	G	A3, B2 " " " " " "

FOR ATTACHMENT TO SWD 471

FORMERLY
S.W.D. 59

STANDARD WIRING DIAGRAM

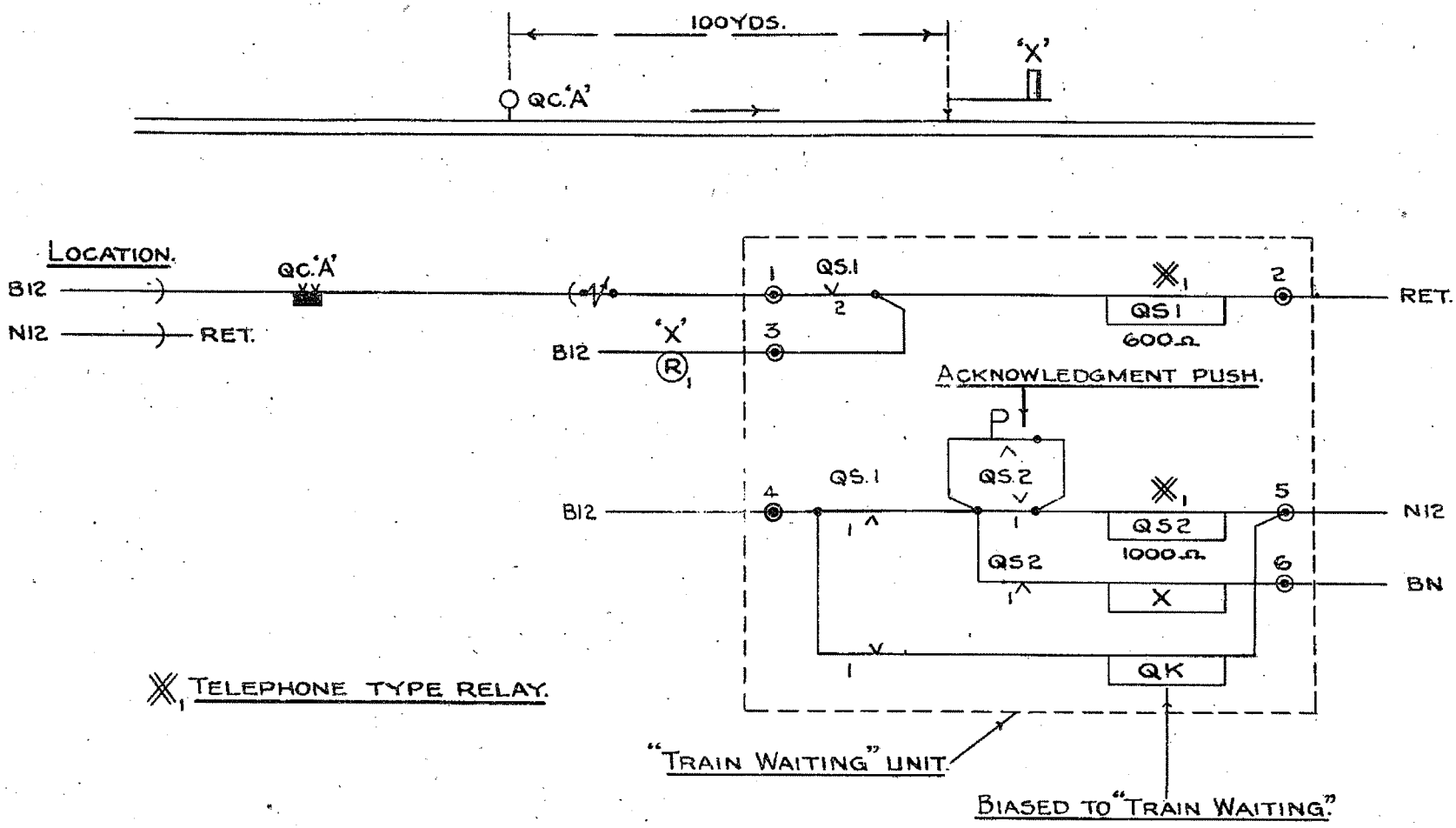

"TRAIN WAITING" UNIT.

L.N.E.R. - SOUTHERN AREA.
SIGNAL & TELEGRAPH ENGINEER'S OFFICE
KINGS CROSS STATION, N.1.

DRAWN BY S.W.S.
TRACED BY S.W.S.
CHECKED BY
DATE 22-11-44

S.W.D.472

STANDARD WIRING DIAGRAM

BELL PROVING UNIT

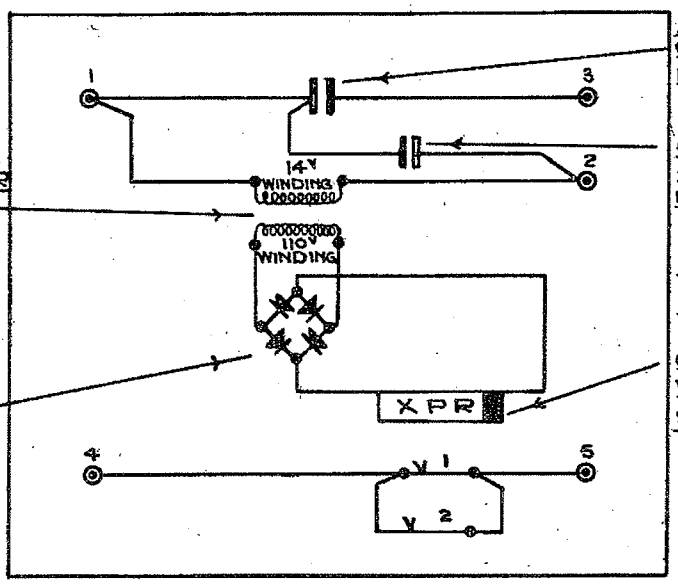

.500 MFD CONDENSER 12V DC WORKING

500 MFD CONDENSER 12V DC WORKING

WB&S Co. SIGNAL LAMP TRANSFORMER 30 VA 2·2 AMPS 0/90/100/110 TO 0/10/12/14V SPECIFICATION 231510.

BRIDGE RECTIFIER S.T.C. CODE No B2/11/W 12V 0·075 AMPS

TELEPHONE TYPE RELAY 250Ω + 250Ω BALANCED, 2 MAKE CONTACTS, COILS WIRED IN PARALLEL SLOW TO RELEASE

BELL PROVING UNIT TO BE MADE UP IN WOOD CASE WITH EXTERNAL TERMINALS. SIZE TO PERMIT HOUSING ON STANDARD RELAY RACK OR IN STANDARD CABINET. SIDES FRONT & TOP TO BE REMOVEABLE.

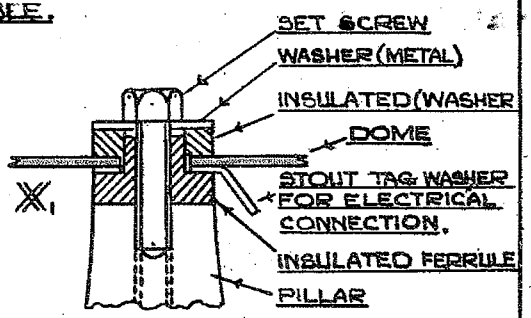

DETAIL OF DOME INSULATION.

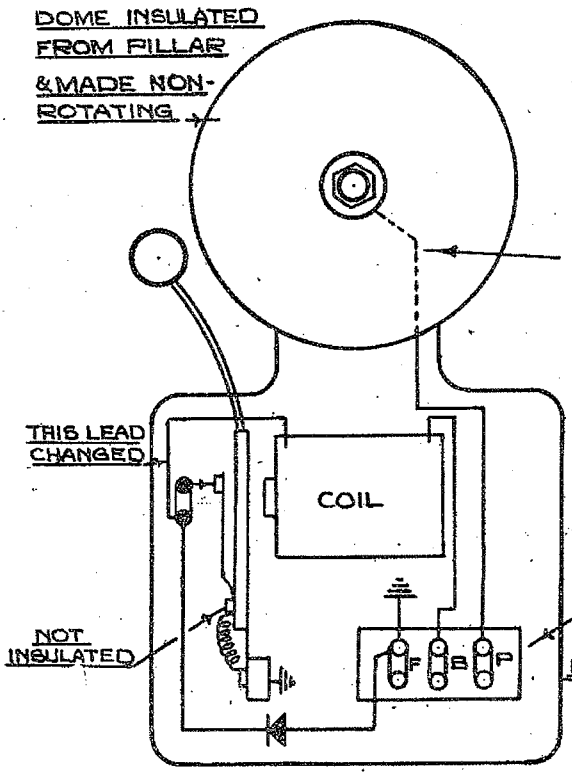

3 TERMINALS, B & P INSULATED FROM THE FRAME.

NOTE X1 WITH SOME MAKES OF BELL IT IS POSSIBLE TO INSULATE THE BASE OF THE BELL PILLAR INSTEAD OF USING THE ARRANGEMENT SHEWN

MODIFIED LOUD SOUNDING BELL TO BE USED WITH PROVING UNIT.

BELL PROVING UNIT.

WIRING OF UNIT & MODIFICATION OF BELL TO BE USED WITH PROVING UNIT.

B.R. ~ E.R.
SIGNAL ENGINEERS DEPT.
KINGS CROSS STATION.

DRAWN BY B.O.B.	SWD 473
TRACED BY	
CHECKED BY	DATE 19-8-53

STANDARD WIRING DIAGRAM

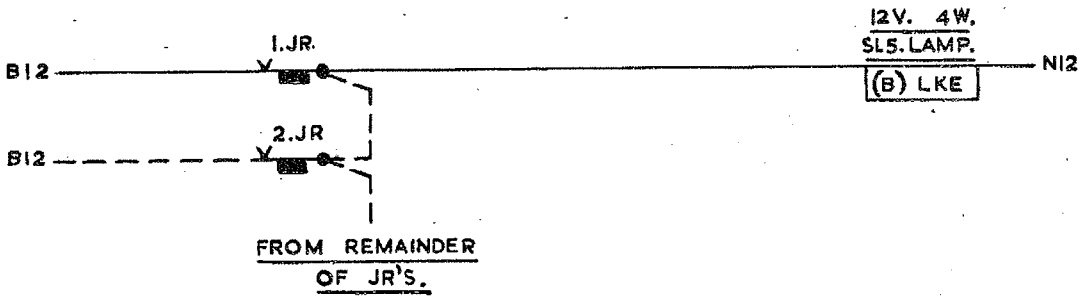

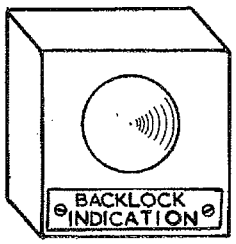

NOTES:—

1. INDICATOR TO HAVE A WHITE LIGHT, TO BE ILLUMINATED WHEN A J.R. HAS OPERATED AND EXTINGUISHED WHEN THE LEVER IS PLACED NORMAL.

2. GENERALLY A COMMON INDICATOR WILL BE PROVIDED ON THE BLOCK SHELF, BUT IN THE CASE OF A LONG FRAME ADDITIONAL INDICATORS MAY BE NECESSARY. THESE SHOULD BE LOCATED CENTRALLY BETWEEN GROUPS OF BACKLOCKED LEVERS. SEPARATE INDICATORS SHOULD BE CONTROLLED ONLY BY THE J.R'S. OF THE LEVERS WITH WHICH THEY ARE ASSOCIATED.

3. IF GROUP INDICATORS ARE PROVIDED THE LABEL SHOULD GIVE THE NUMBERS OF THE FIRST AND LAST LEVERS IN THE GROUP. E.G:— LEVERS No. 46—60.

BACKLOCK RELEASE INDICATOR

B.R.—E.R.
SIGNAL ENGINEERS DEPARTMENT.
KINGS CROSS STATION.

DRAWN BY. H.J.R.	SWD475.
TRACED BY. H.J.R.	
CHECKED BY. N.M.	DATE. 17—4—57.

STANDARD WIRING DIAGRAM

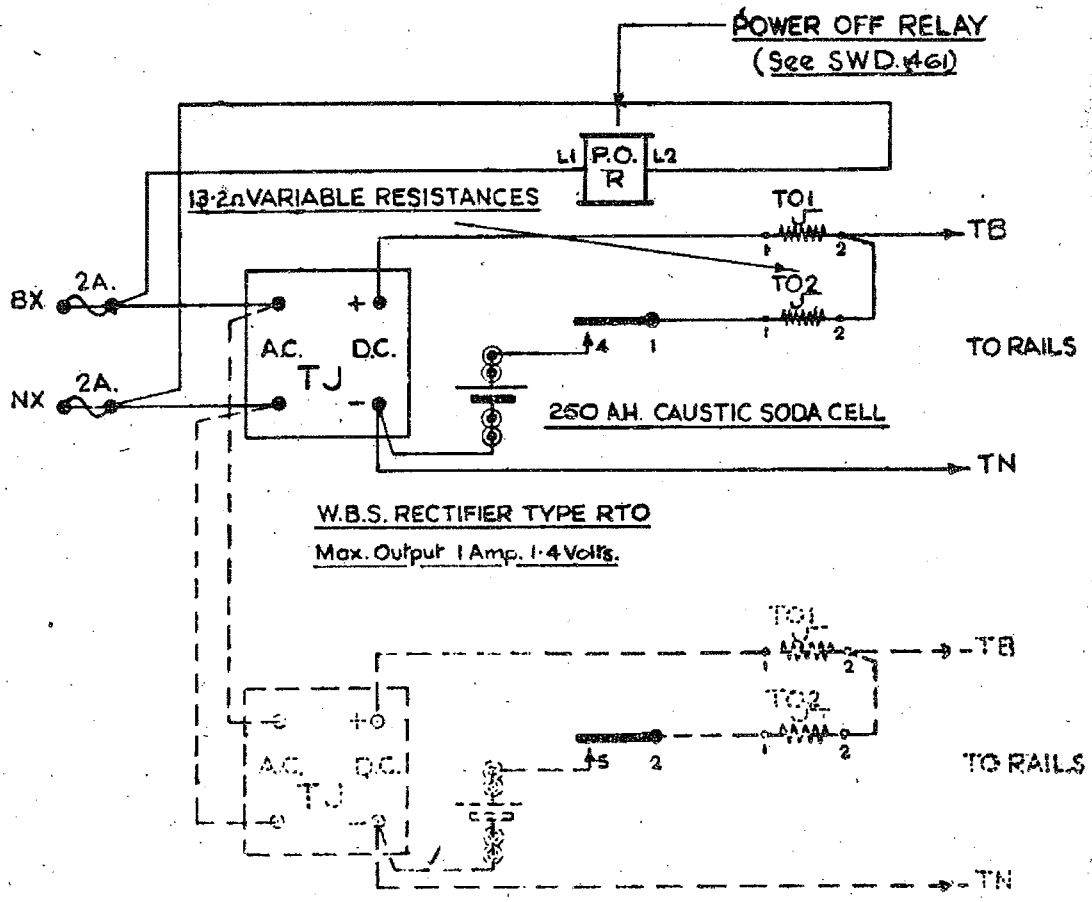

Where two Track Feed Sets are housed in the same Location a common Power Off Relay should be used and connected to the second Rectifier, shown dotted.

WIRING OF TRACK FEED SETS.

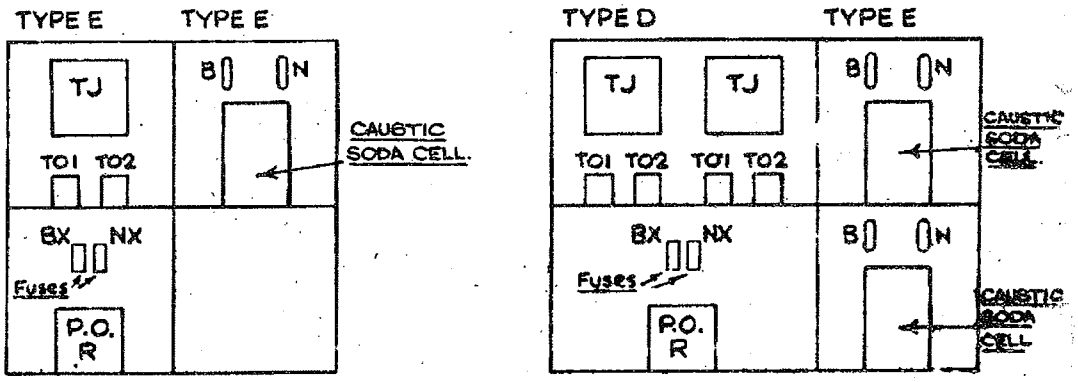

ARRANGEMENT OF APPARATUS.

RECTIFIER FED TRACK CIRCUITS.

WITH POWER OFF RELAY & PRIMARY BATTERY STANDBY.

L.N.E.R. SOUTHERN AREA.
SIGNAL & TELEGRAPH ENGINEER'S OFFICE
KINGS CROSS STATION, N.1.

DRAWN BY
TRACED BY
CHECKED BY

SWD 481

DATE 2.12.42.

2	9	B	A
FORMERLY S.W.D. 6.6. 13·2Ω RESISTANCE INCLUDED		TYPE No. 08 CELL DELETED	30-9-46

STANDARD WIRING DIAGRAM.

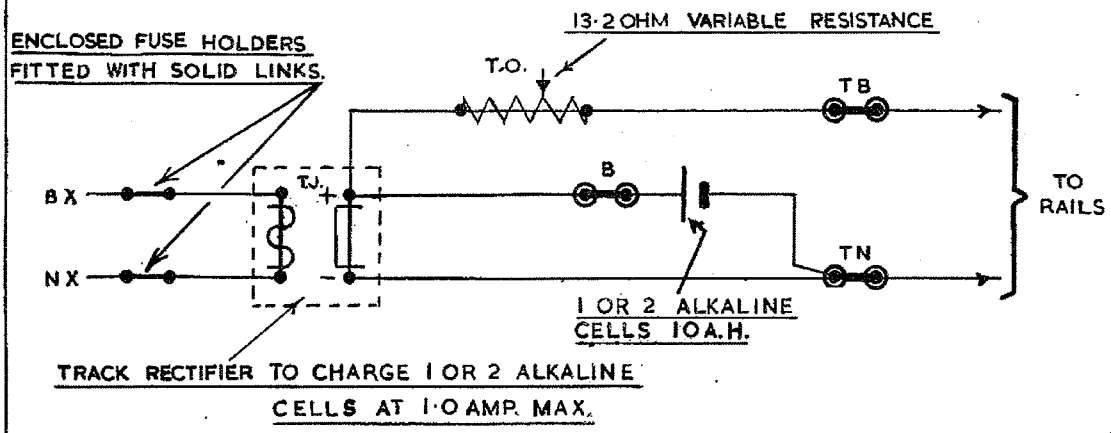

WIRING OF TRACK FEED

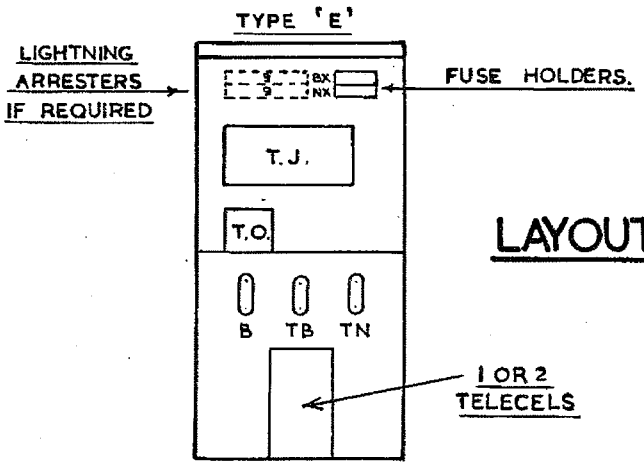

LAYOUT OF CUPBOARD

NOTES.

1. ONE ALKALINE CELL TO BE NORMALLY USED. TWO CELLS IN SERIES TO BE PROVIDED WHEN REQUIRED TO OVERCOME RAIL SURFACE CONDITIONS.

2. CHARGING RATE TO BE ADJUSTED SO THAT CELL VOLTAGE IS MAINTAINED AT 1·45.

3. STANDBY CELL – 10A.H. TELECEL, TYPE PAO, CODE Nº. 9/54/41356.

5-3-65 AB	D 5/2 E STANDBY REPLACED BY ALKALINE CELL RR	

RECTIFIER FED TRACK CIRCUITS WITH AKALINE CELL STANDBY

B.R. — E.R.

SIGNAL ENGRS. DEPT.
KINGS CROSS STATION.

DRAWN BY. J.R.S.	SWD482A
TRACED BY. J.R.S.	
CHECKED BY. N.M.	DATE 23·9·55

STANDARD WIRING DIAGRAM.

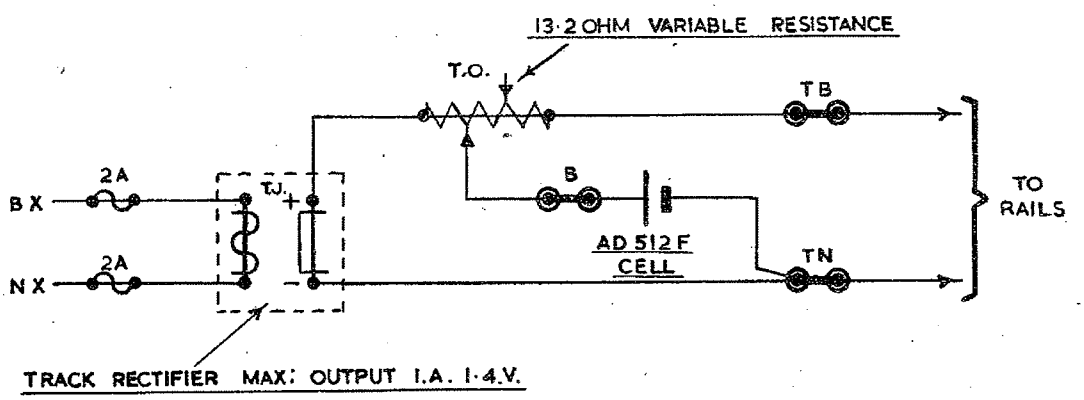

WIRING OF TRACK FEED

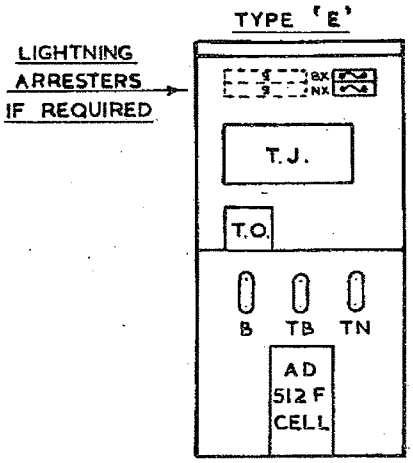

LAYOUT OF CUPBOARD

NOTES.

1. THE CORRECT TAPPING OF TRACK RESISTANCE SHOULD GIVE 1·5V. ON VOLTMETER CONNECTED ACROSS TERMINALS B AND TN WITH THE CELL DISCONNECTED.

2. REVERSE CURRENT THROUGH CELL SHOULD NOT EXCEED 50 MA.

3. CELL VOLTAGE 1—2 WEEKS AFTER INSTALLATION SHOULD BE BETWEEN 1·7V. AND 1·8V. RE-ADJUSTMENT IS NECESSARY IF VOLTAGE IS LOWER THAN 1·6V. OR HIGHER THAN 2.V.

RECTIFIER FED TRACK CIRCUITS.

FLOATING DRY CELL.

B.R. — E.R.

SIGNAL ENGRS. DEPT.
KINGS CROSS STATION.

DRAWN BY. J.R.S.	SWD482
TRACED BY. J.R.S.	
CHECKED BY. N.M.	DATE. 23·9·55

STANDARD WIRING DIAGRAM.

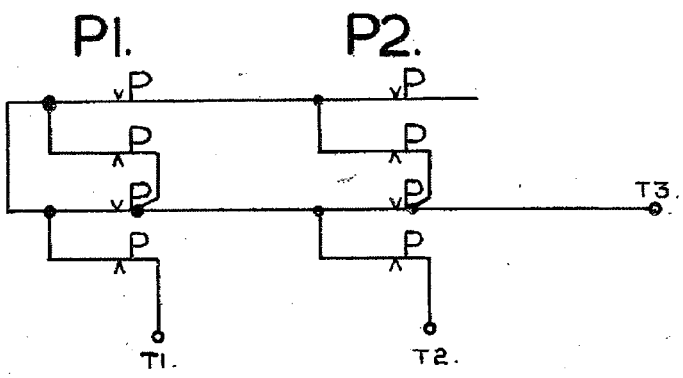

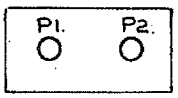

ARRANGEMENT OF PLUNGERS.

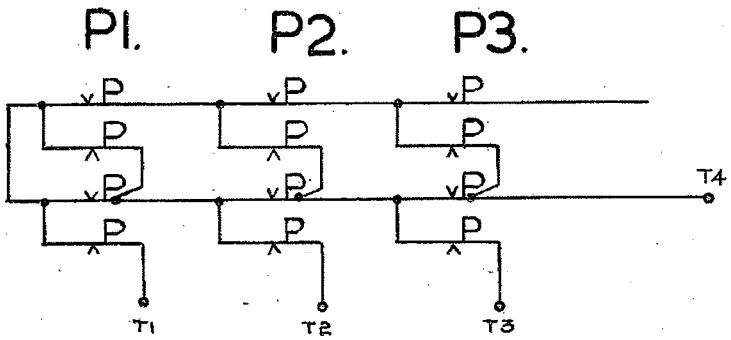

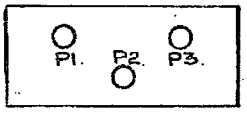

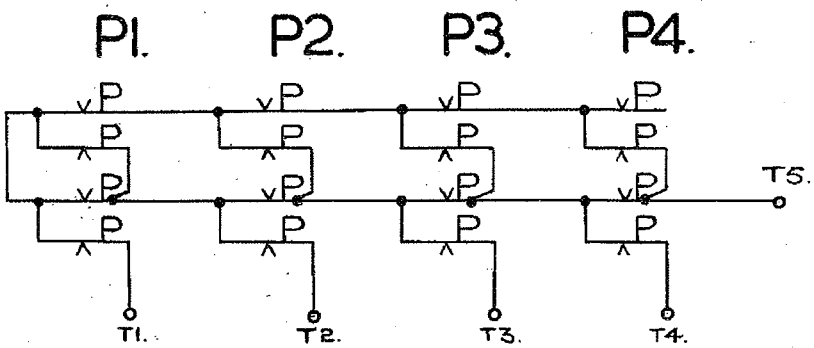

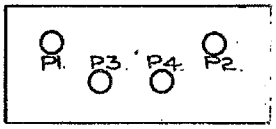

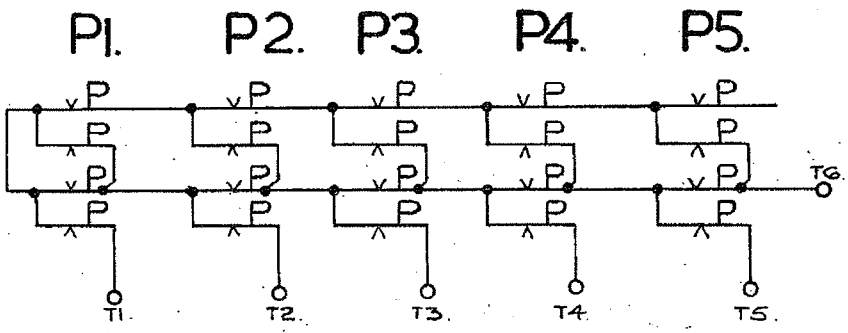

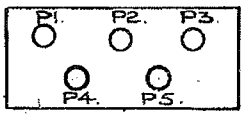

NOTE: FOR DETAILS OF CONSTRUCTION OF UNITS SEE DWG. 52LS969.

ROUTE CHECKING PLUNGER UNITS. (INTERNAL WIRING.)

BRITISH RAILWAYS – EASTERN REGION.	
SIGNAL ENGINEER'S DEPT. KINGS CROSS STATION.	
DRAWN BY. R.J.P.	SWD.490
TRACED BY. P.G.	
CHECKED BY. N.M.	DATE. 15-6-55.

15-6-55 P.G.

SUPERSEDES SWD. 128.

STANDARD WIRING DIAGRAM.

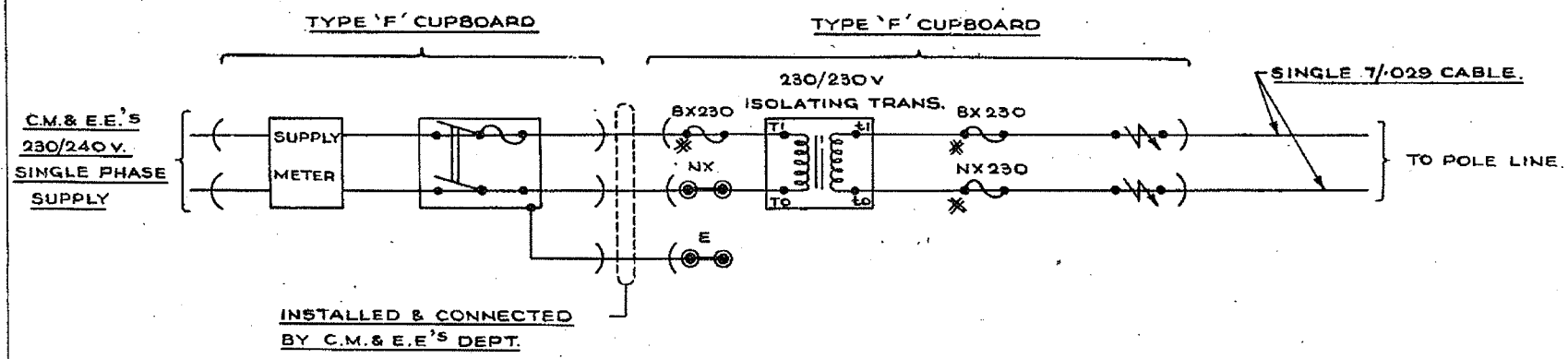

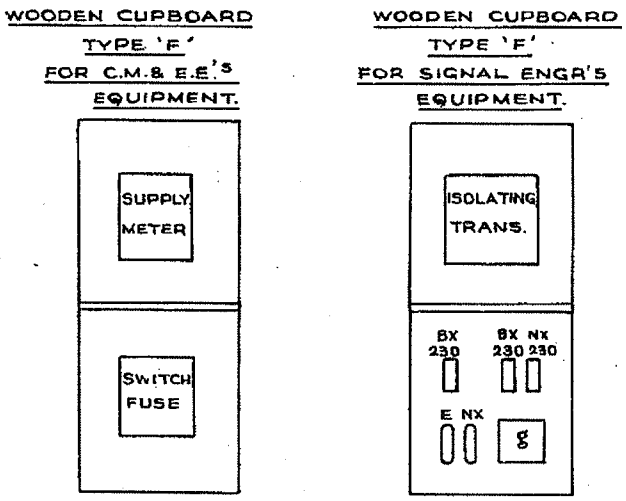

※ :- ENCLOSED H.R.C. FUSES.

FOR NOTES SEE S.W.D. 499.

POWER SUPPLIES.

CASE 'A'

POWER SUPPLY AT LINESIDE LOCATION.

B.R.-E.R.
SIGNAL ENGINEER'S DEPT.
FINSBURY SQUARE E.C.2.

DRAWN BY: R.S.T.
TRACED BY: E.C.
CHECKED BY: A.G.B.

S.W.D.495

DATE: 17. 11. 58.

STANDARD WIRING DIAGRAM.

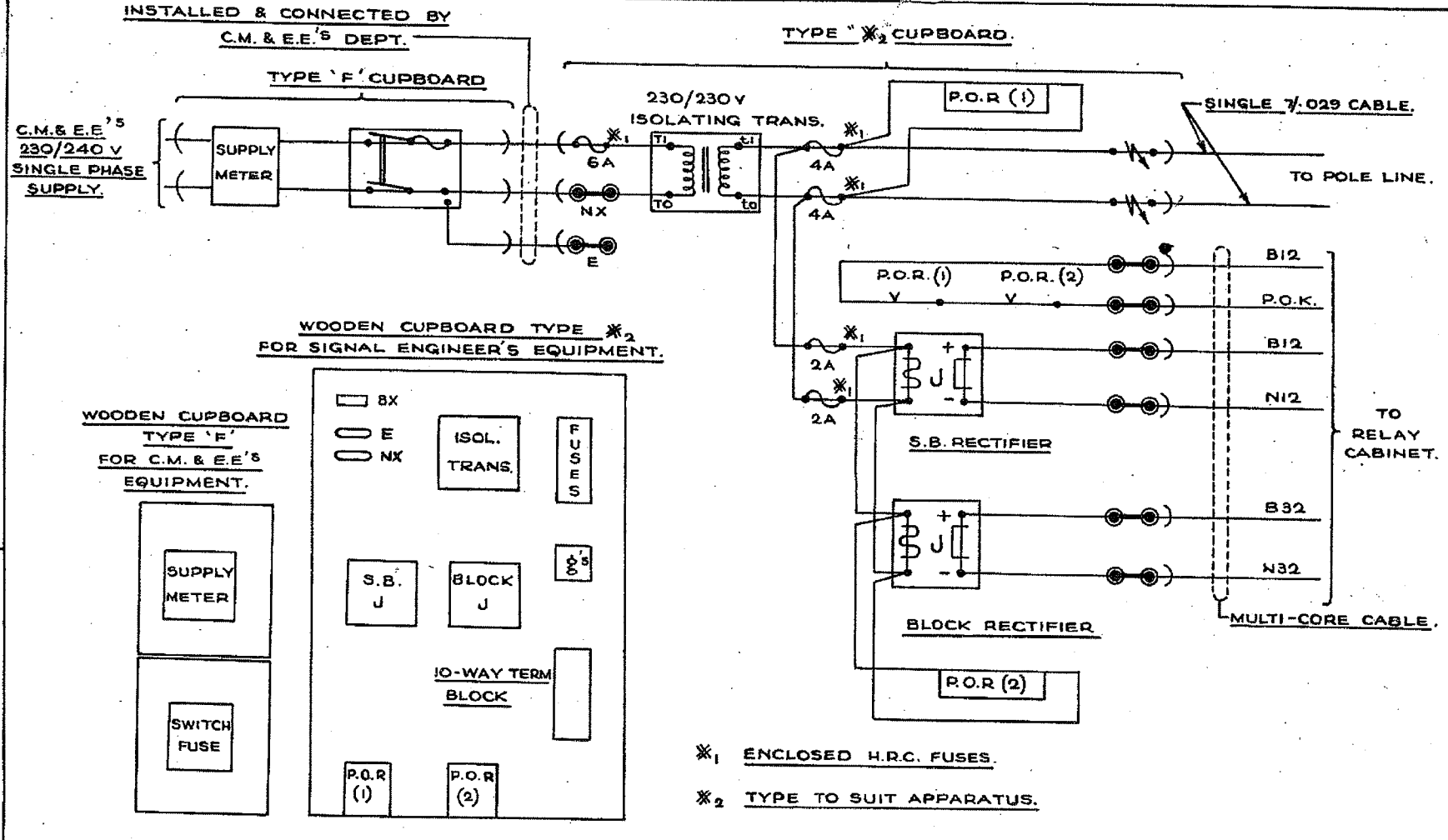

POWER SUPPLIES.

CASE 'B'

POWER SUPPLY AT S.B.

WITH ISOLATING TRANSFORMER

B.R.-E.R.

SIGNAL ENGINEER'S DEPT.
FINSBURY SQUARE, E.C.2

DRAWN BY: R.S.T.

TRACED BY: E.C.

CHECKED BY: A.G.B.

DATE: 17.11.58.

S.W.D.496

STANDARD WIRING DIAGRAM.

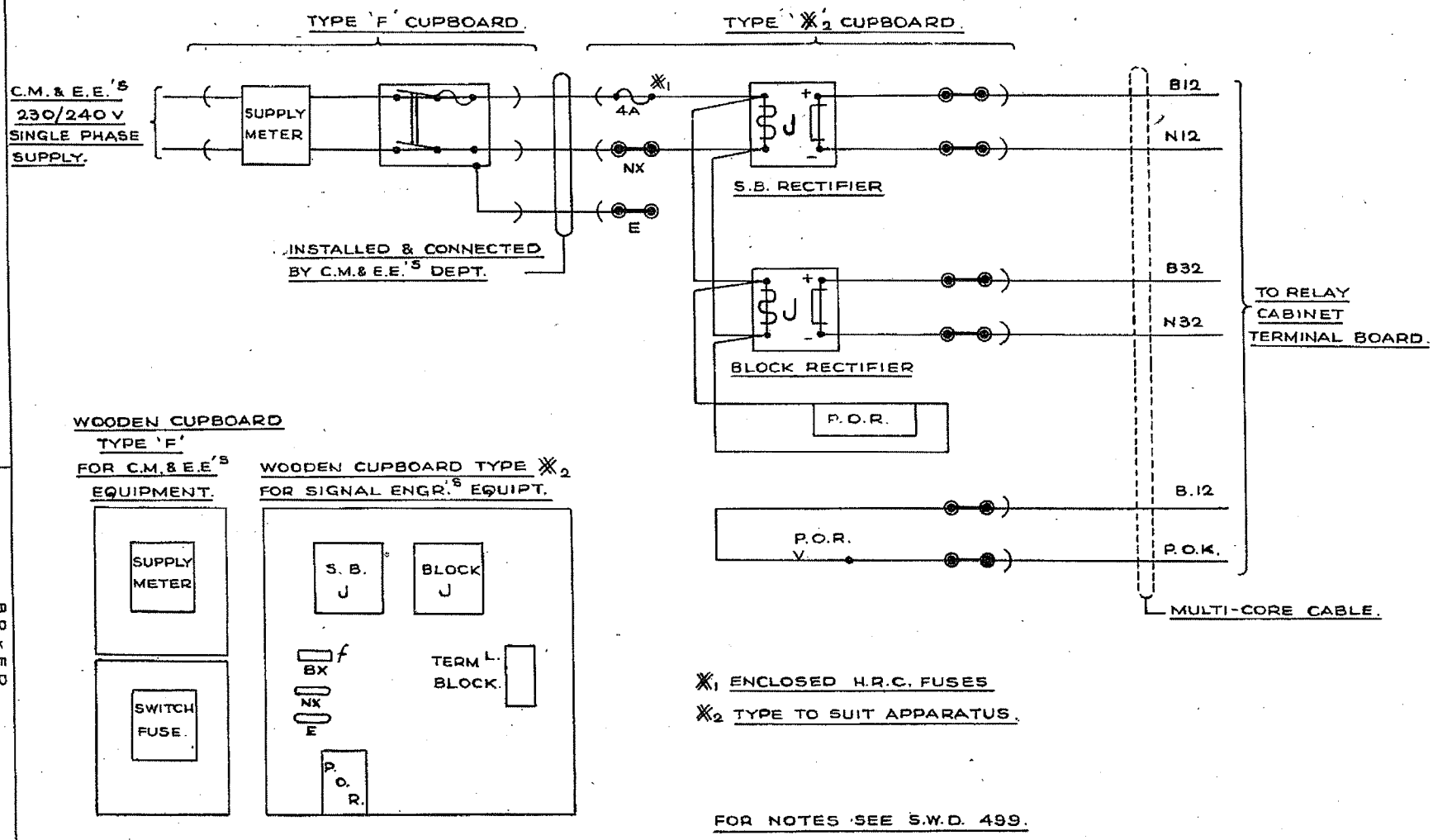

POWER SUPPLIES.

CASE "C".

POWER SUPPLY AT SIGNAL BOX WITHOUT ISOLATING TRANSFORMER.

B.R. - E.R.
SIGNAL ENGINEER'S DEPT.
FINSBURY SQUARE, E.C.2.

DRAWN BY: R.S.T.
TRACED BY: E.C.
CHECKED BY: A.G.B.
DATE: 17. 11. 58.

SWD497

STANDARD WIRING DIAGRAM.

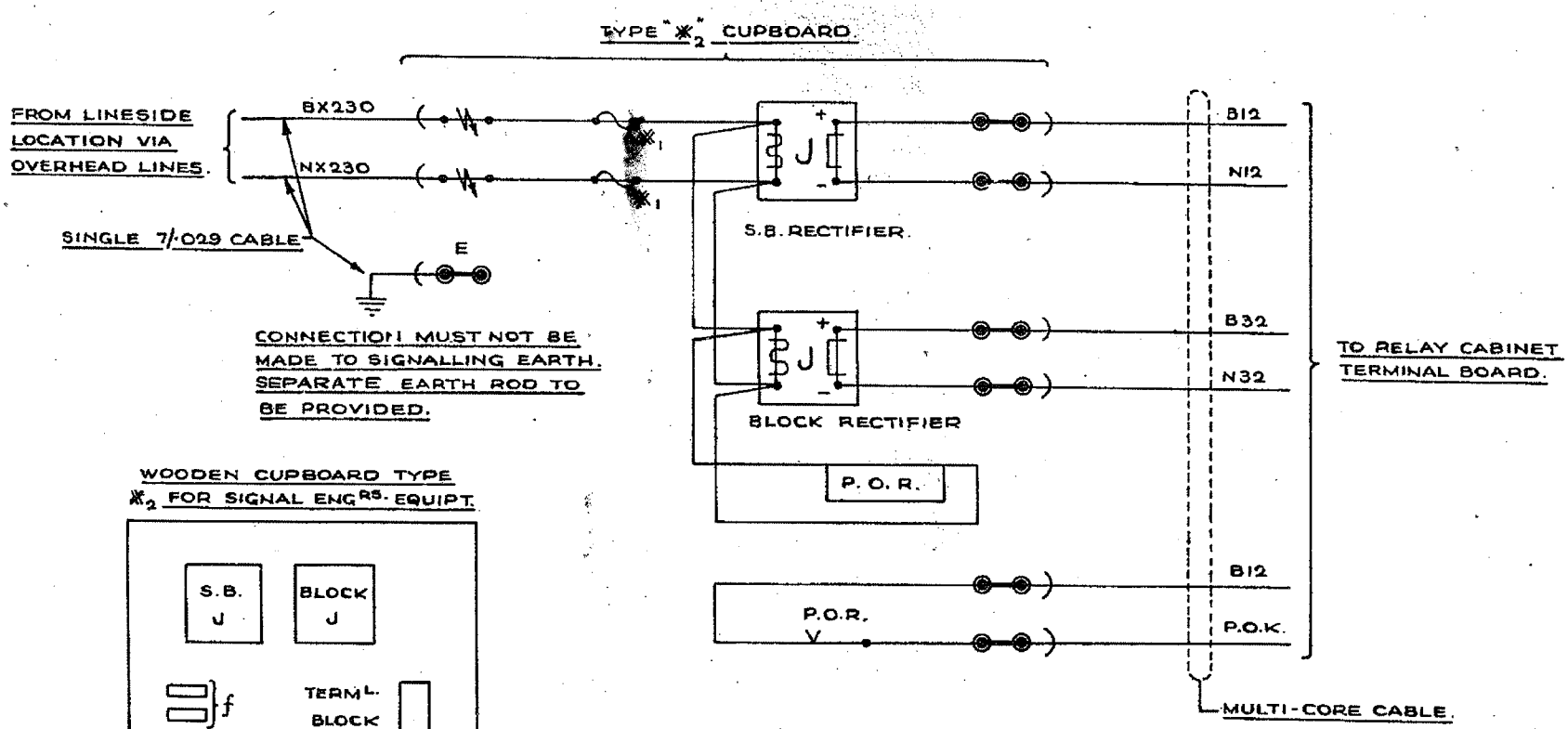

WOODEN CUPBOARD TYPE
*2 FOR SIGNAL ENGRS. EQUIPT.

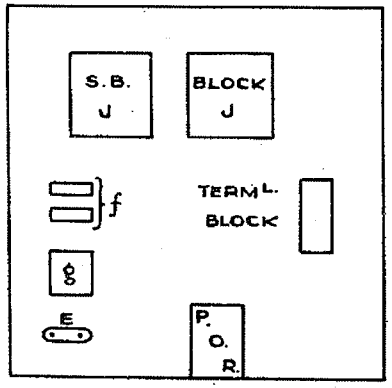

*1 ENCLOSED H.R.C. FUSES.

*2 TYPE TO SUIT APPARATUS.

FOR NOTES SEE S.W.D. 499

POWER SUPPLIES.

CASE "D"

SIGNAL BOX SUPPLY TAKEN FROM SIGNALLING MAINS ON POLE LINE.

B.R.-E.R.
SIGNAL ENGINEER'S DEPT.
FINSBURY SQUARE. E.C.2.

DRAWN BY: R.S.T.
TRACED BY: E.C.
CHECKED BY: A.G.B.

S.W.D.498

DATE: 17.11.58.

STANDARD WIR DIAGRAM.

NOTES:-

1. WIRING OF SIGNAL ENGINEER'S CUPBOARD TO BE CARRIED OUT IN 7/·029 SINGLE CORE FLAMEPROOF CABLE.

2. ALL TERMINALS ON ISOLATING TRANSFORMER, RECTIFIER INPUT TERMINALS, AND P.O.R. CONTROL TERMINALS TO BE FITTED WITH PROTECTIVE SLEEVES AND INSULATED NUTS.

3. METAL CASING OF TRANSFORMERS AND RECTIFIERS TO BE EARTHED TO THE C.M.& E.E.'S EARTH CONNECTION.

4. LIGHTNING ARRESTERS, WHICH MUST BE OF THE GAS DISCHARGE TYPE TO BE EARTHED ON TO THE SIGNALLING EARTH AND MUST BE FITTED WITH OVERALL PROTECTIVE COVERS AND INSULATED NUTS.

5. FUSE VALUES SHEWN IN CASE 'B' ARE TO ILLUSTRATE GRADING PRINCIPLE, BUT IN PRACTICE WILL BE DETERMINED BY THE ACTUAL LOAD.

POWER SUPPLIES.

NOTES APPLICABLE TO S.W.D'S 495 TO 498.

B.R. - E.R.
SIGNAL ENGINEER'S DEPT.
FINSBURY SQUARE E.C.2.

DRAWN BY: R.S.T.	S.W.D.499
TRACED BY: E.C.	
CHECKED BY: A.G.B.	DATE: 17. 11. 58