EASTERN

BRITISH RAILWAYS

REGION

STANDARD WIRING DIAGRAMS

INDEX - SIGNALLING.

Nº	SUBJECT.
S/1	TRACK CIRCUITS.
2	BLOCK CONTROLS.
3	INTERMEDIATE BLOCK SIGNALS.
4	MOTOR OPERATED SEMAPHORE SIGNALS.
5	ROUTE INDICATORS.
6	REPEATING - SEMAPHORES.
7	COLOUR LIGHT SIGNALS.
8	E.P. SIGNALLING.
9	POWER SUPPLIES.
10	GROUND FRAME CONTROLS.
11	LEVER LOCKS.
12	ELECTRICAL DETECTION.
13	POWER POINTS.
14	REGULATION 34 (DISTANT SIGNAL WORKING).
15	SIGNALLING PRINCIPLES & PRACTICES.
16	SIGNALS SHAPES & SIZES.
17	AUTOMATIC WARNING SYSTEM.
18	SEMAPHORE SIGNALS - ELECTRIC LIGHTING

A 8-2-52 UAS	B 25-2-53 C.R.S.	9-12-60 C.R.S.	
NOTES 3 & 4 ADDED D.D.	'C' RELAY PROVED DN C.R.S.	RETRACED ON LINEN.	

ORIGINAL No. 44CES/A400/1 2-11-48

STANDARD WIRING DIAGRAM

3 POS^N S.N. BLOCK.

TRACK CIRCUIT CONTROL WITH ACCEPTANCE EFFECTIVE FOR ONE MOVEMENT ONLY.

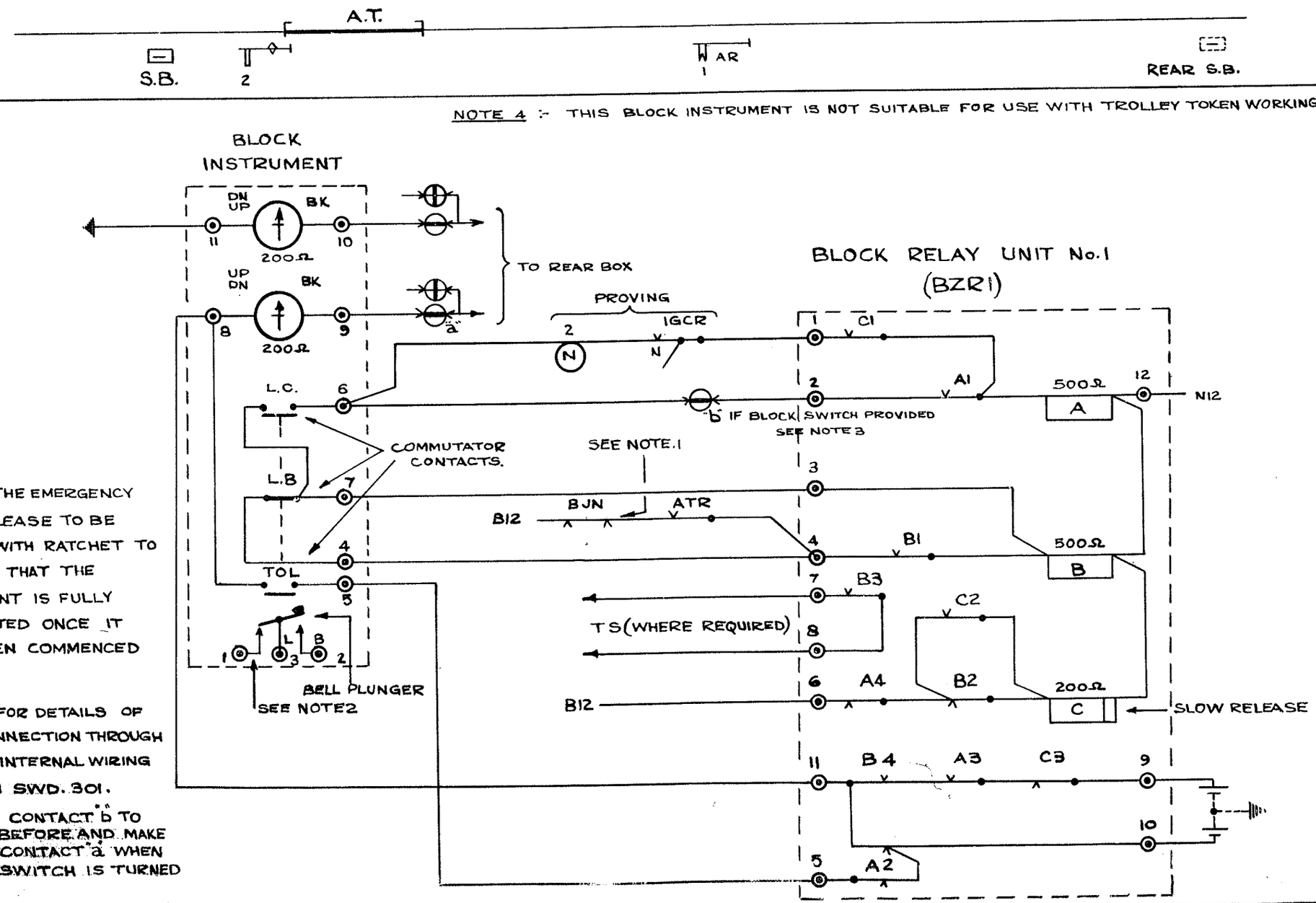

NOTE 1. THE EMERGENCY TIME RELEASE TO BE FITTED WITH RATCHET TO ENSURE THAT THE MOVEMENT IS FULLY COMPLETED ONCE IT HAS BEEN COMMENCED

NOTE 2. FOR DETAILS OF THIS CONNECTION THROUGH BX SEE INTERNAL WIRING DIAGRAM SWD. 301.

NOTE 3. CONTACT 'b' TO BREAK BEFORE AND MAKE AFTER CONTACT 'a' WHEN BLOCK SWITCH IS TURNED

B P ~ E R
SIGNAL ENGINEER'S DEPT
FINSBURY SQUARE, E.C.2

DRAWN BY
TRACED BY
CHECKED BY J.F.H.T.
DATE 22-9-45

No. SWD 300^B

2

STANDARD WIRING DIAGRAM

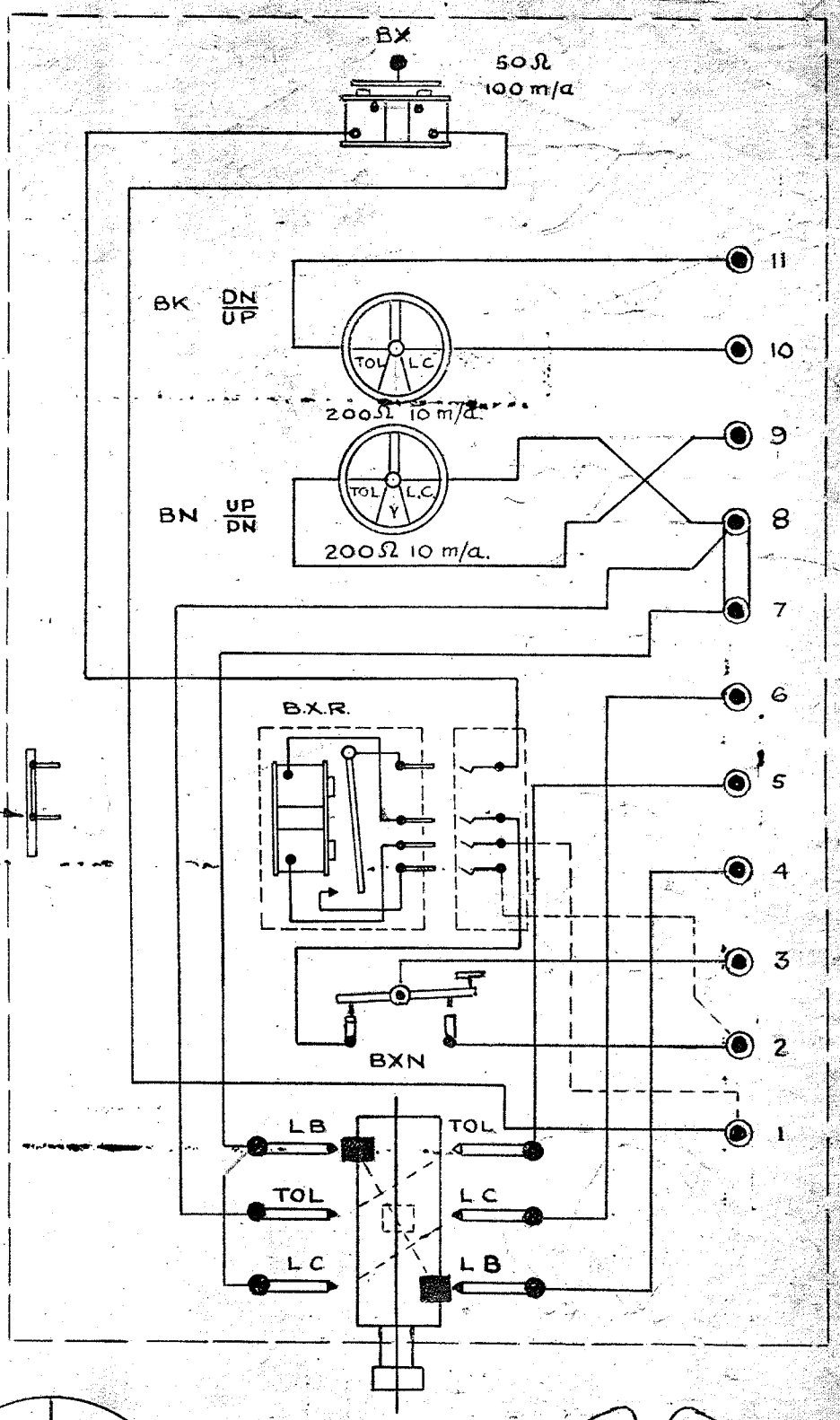

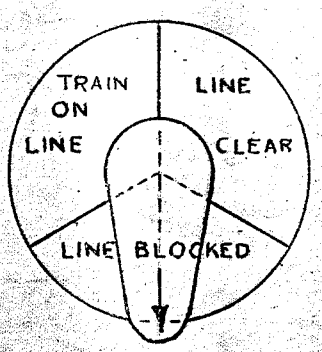

FRONT VIEW
COMMUTATOR PLATE AND HANDLE (NORMAL)

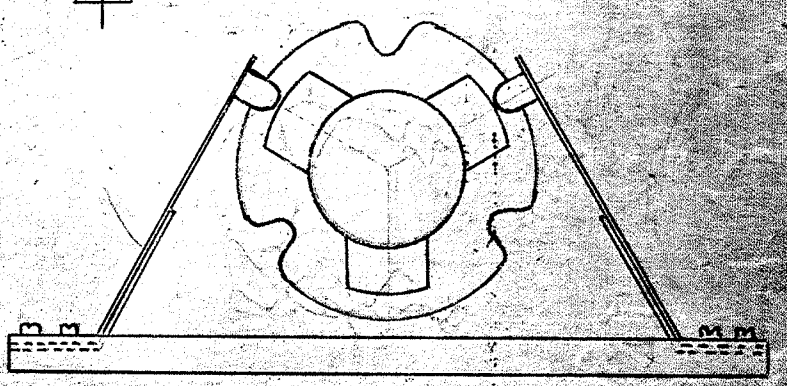

END VIEW
COMMUTATOR BARREL AND SPRINGS (NORMAL)

A 7.3.55	WIRES INTERCHANGED BETWEEN TER Nos. 8+9 AND INDICATOR.

3 POS.N S.N. BLOCK.

DOUBLE DIAL INSTRUMENT.

INTERNAL WIRING.

RAILWAY EXECUTIVE EASTERN REGION
SIGNAL & TELECOMMUNICATION ENGINEER.
KING'S CROSS STATION. N.1.

DRAWN R.H. ECKETT DATE 22-9-48

No. SWD 301A.

ORIGINAL No.
44CES/400/2
2-11-48.

STANDARD WIRING DIAGRAM.

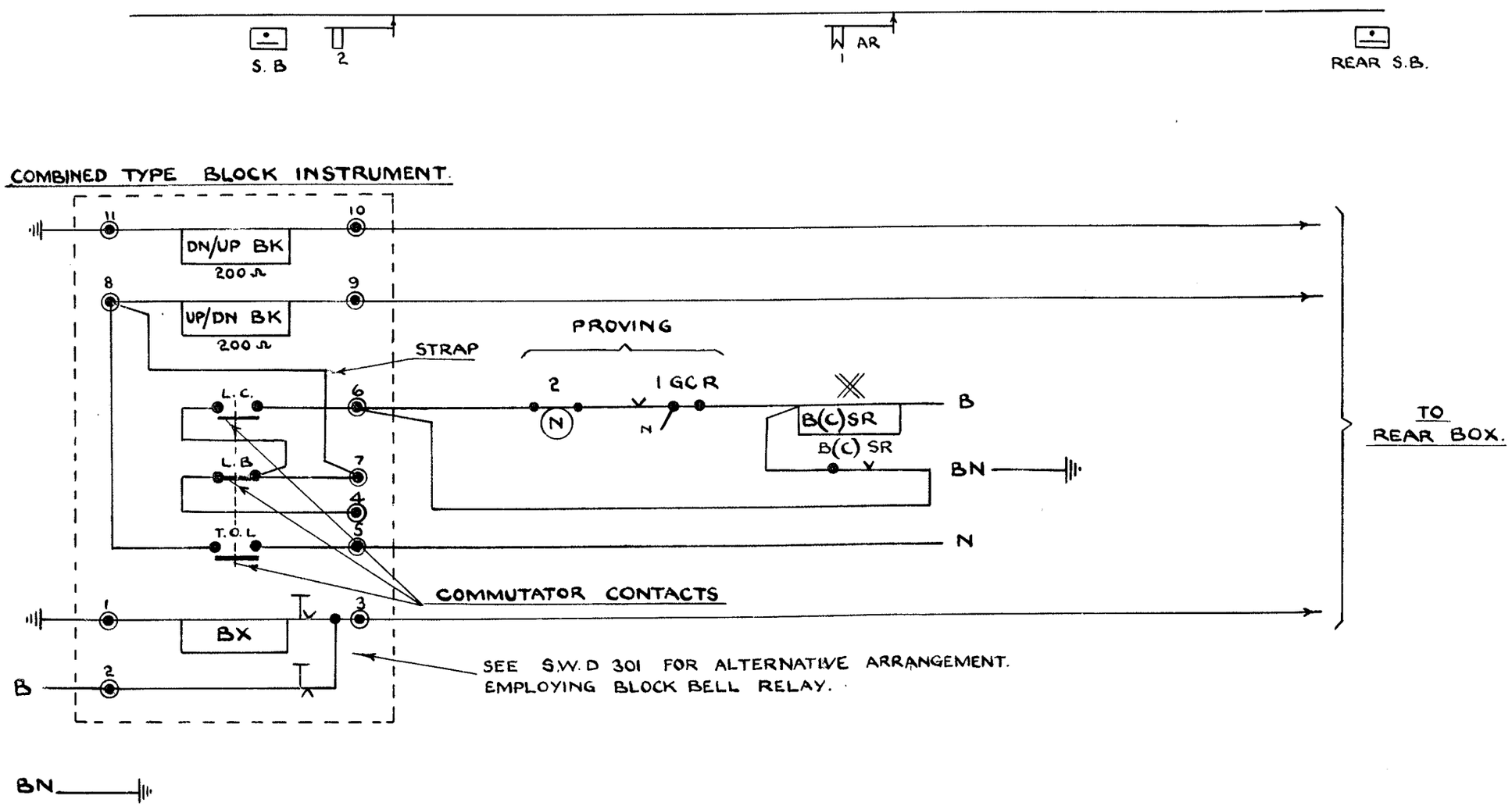

200 Ω TELEPHONE TYPE RELAY.

3 POS. S.N. BLOCK.

SIGNAL PROVING CONTROL.

B.R. ~ E.R.

SIGNAL ENGRS. DEPT.
KINGS CROSS STATION.

DRAWN BY. R.Y.
TRACED BY J.R.S.
CHECKED BY N.M.

SWD 302

DATE. 13-12-55

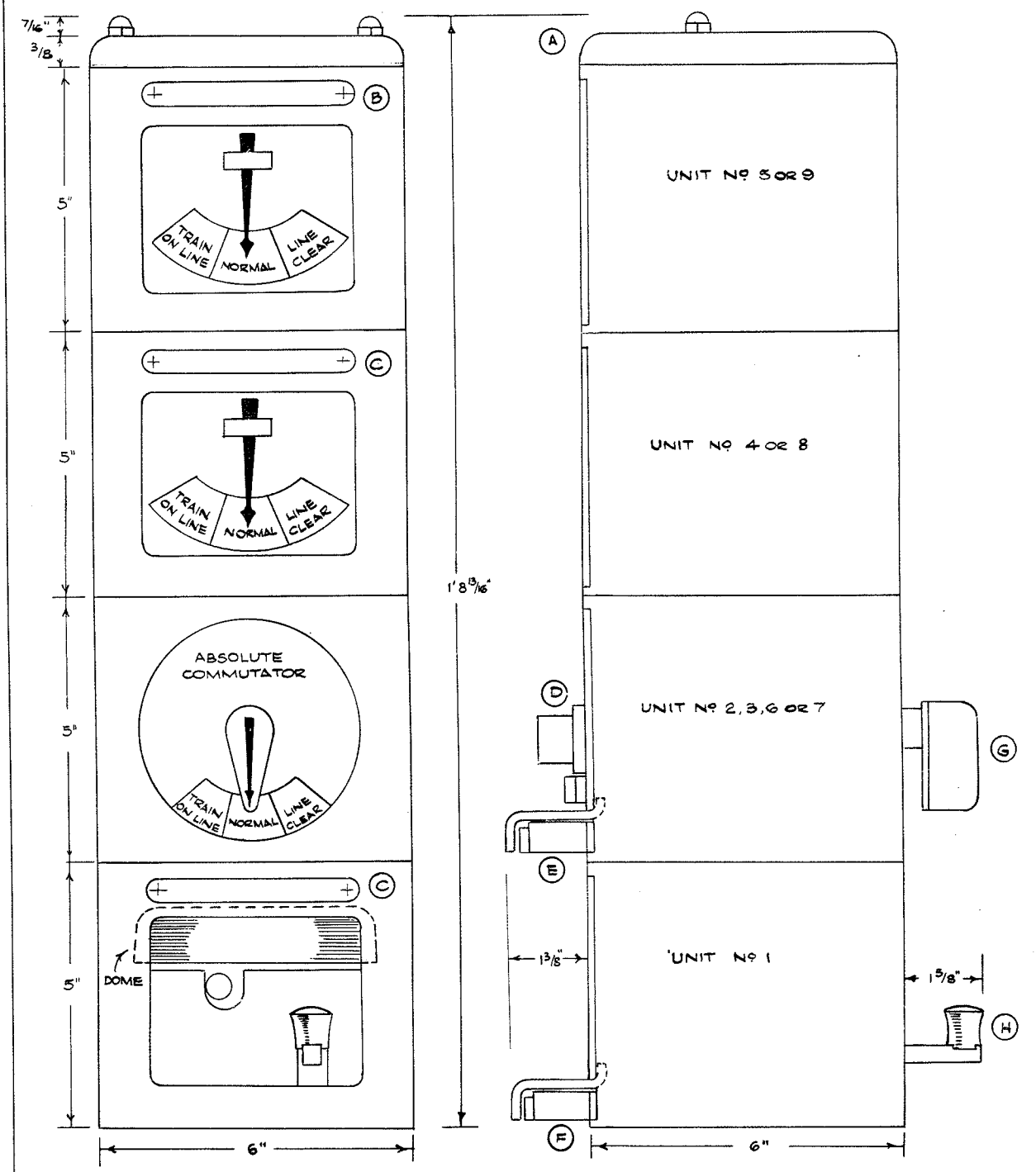

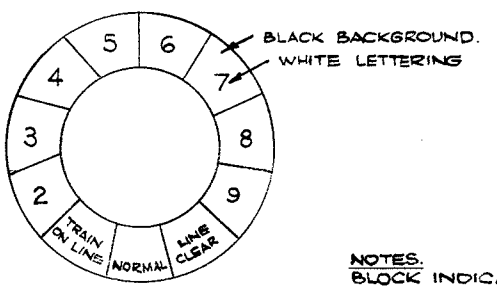

PERMISSIVE COMMUTATOR

INDICATOR COLOURING:-
BACKGROUND WHITE.
NORMAL - BACKGROUND WHITE. LETTERING BLACK.
LINE CLEAR - BACKGROUND GREEN LETTERING WHITE
TRAIN ON LINE - BACKGROUND RED. LETTERING WHITE.

KEY.

- (A) BLACK CAP.
- (B) WHITE LABEL. BLACK LETTERING.
- (C) BLACK LABEL WHITE LETTERING.
- (D) YALE LOCK.
- (E) 14 WAY COUPLING PLUG WITH PERSPEX SHIELD.
- (F) 8 WAY COUPLING PLUG WITH PERSPEX SHIELD.
- (G) WHITE COMMUTATOR HANDLE.
- (H) BLACK TAPPER KEY KNOB.

NOTES.

BLOCK INDICATORS - 125 Ω RESISTANCE. 9 m.a. MINIMUM OPERATING CURRENT.
BLOCK BELL - 45 Ω RESISTANCE. 180 m.a. MINIMUM OPERATING CURRENT.
UNIT Nº 1 - BLOCK BELL & KEY. BLACK CASE.
UNIT Nº 2 - PERMISSIVE COMMUTATOR WITH LINE CLEAR ON LEFT. BLACK CASE.
UNIT Nº 3 - ABSOLUTE COMMUTATOR WITH LINE CLEAR ON LEFT. BLACK CASE.
UNIT Nº 4 - PEGGER INDICATOR WITH LINE CLEAR ON LEFT. BLACK CASE.
UNIT Nº 5 - NON PEGGER INDICATOR WITH LINE CLEAR ON LEFT. WHITE CASE.
UNIT Nº 6 - PERMISSIVE COMMUTATOR WITH LINE CLEAR ON RIGHT. BLACK CASE.
UNIT Nº 7 - ABSOLUTE COMMUTATOR WITH LINE CLEAR ON RIGHT. BLACK CASE.
UNIT Nº 8 - PEGGER INDICATOR WITH LINE CLEAR ON RIGHT. BLACK CASE.
UNIT Nº 9 - NON PEGGER INDICATOR WITH LINE CLEAR ON RIGHT. WHITE CASE.
DOMES - 6 TONES AVAILABLE, A-F INCLUSIVE.

STANDARD UNIT BLOCK INSTRUMENT

SCALE:- 1/3RD. FULL SIZE.

B.R. - E.R.
SIGNAL ENGINEER'S DEPT.,
KING'S CROSS.

DRAWN BY D.E.D.	TRACED BY
CHECKED BY RR.	DATE 31. 1. 57.

SWD 303

A	7. 12 . 67.	P.J.H.

NORMAL CHECK-LOCK CCT. REMOVED RR

STANDARD WIRING DIAGRAM.

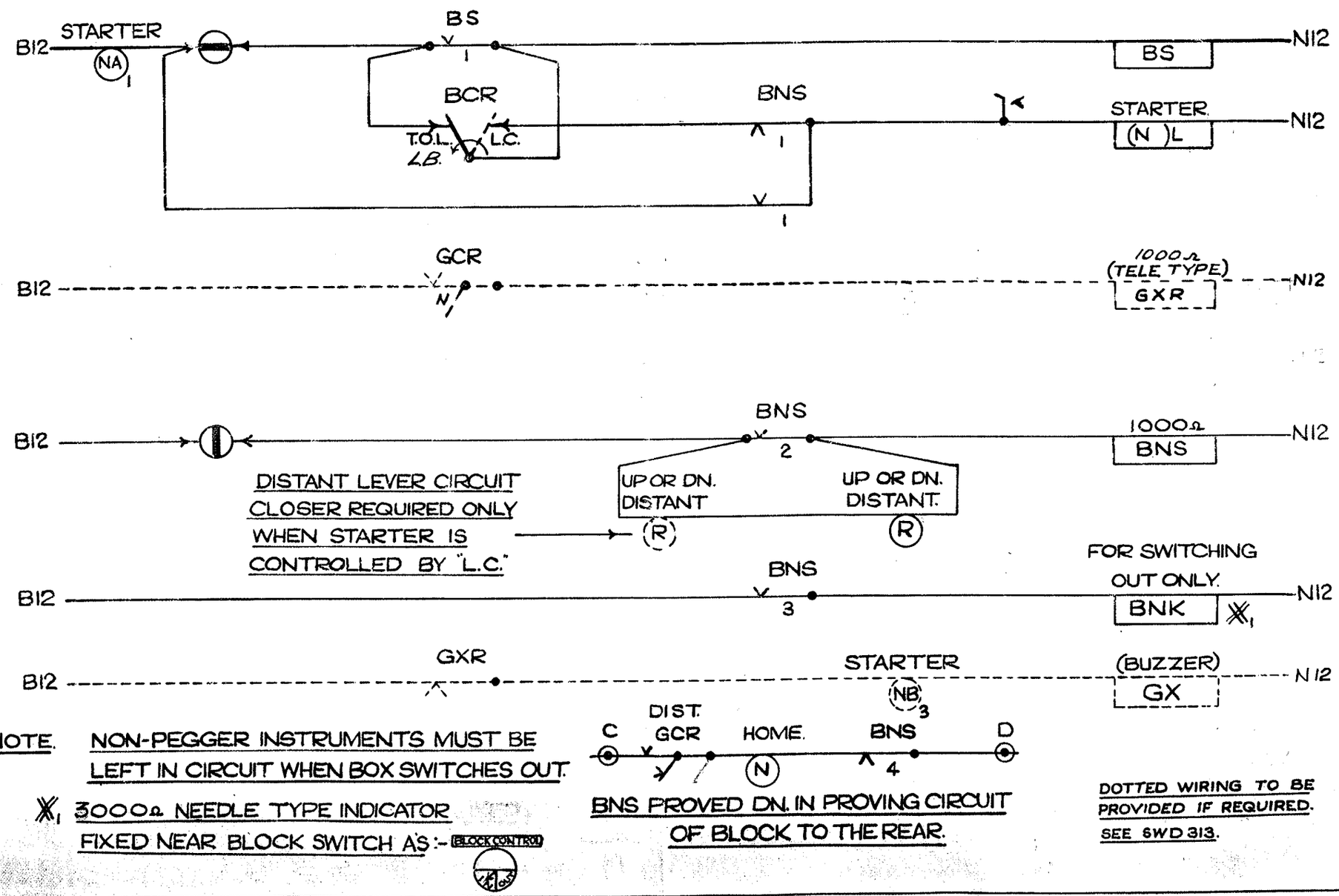

L.C. RELEASE CIRCUIT WHEN BOX IS SWITCHED OUT & STARTING SIGNALS REPLACED FOR OPERATION OF LEVEL CROSSING GATES. (ARRANGEMENT WHEN LOCK ON BLOCK SWITCH DOES NOT EXIST.)

NOTE. NON-PEGGER INSTRUMENTS MUST BE LEFT IN CIRCUIT WHEN BOX SWITCHES OUT.

X1 3000Ω NEEDLE TYPE INDICATOR FIXED NEAR BLOCK SWITCH A'S :- BLOCK CONTROL

DOTTED WIRING TO BE PROVIDED IF REQUIRED. SEE SWD 313.

B.R. - E.R.

CHIEF SIGNAL & TELE. ENGRS OFFICE
FINSBURY SQUARE, E.C.2.

DRAWN BY V.C.
TRACED BY R.S.T.
CHECKED BY N.M.

SWD 314.

DATE 24.4.53

STANDARD WIRING DIAGRAM.

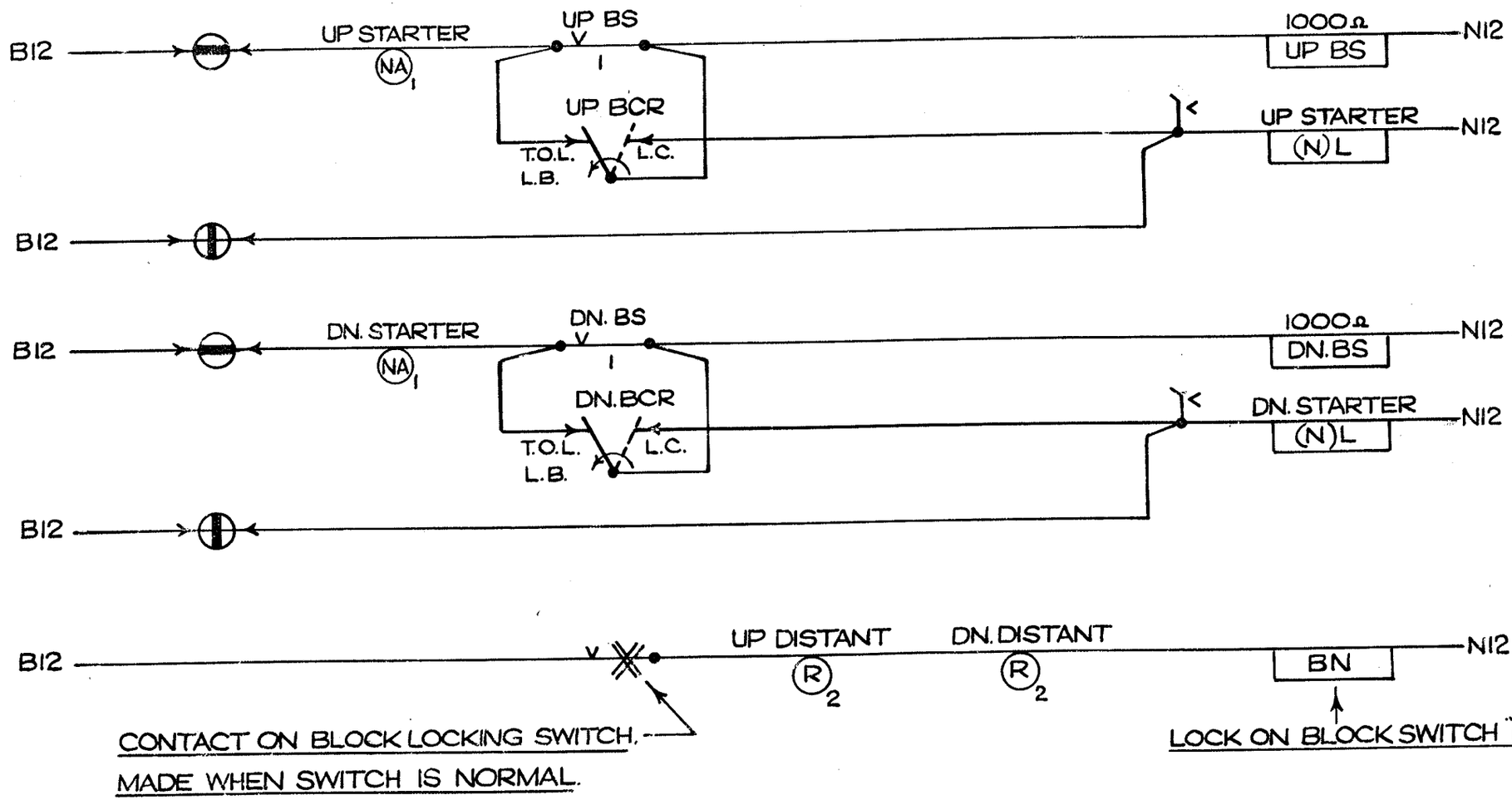

L.C. RELEASE CIRCUIT WHEN BOX IS SWITCHED OUT & STARTING SIGNALS REPLACED FOR OPERATION OF LEVEL CROSSING GATES. (ARRANGEMENT WHEN LOCK ON BLOCK SWITCH EXISTS.)

R.E. ~ E.R.

SIGNAL & TELECOMMUNICATIONS ENGR.
KINGS CROSS STATION, LONDON, N.1.

DRAWN BY

TRACED BY R.S.T.

CHECKED BY N.M.

SWD. 315.

DATE 27·4·53

STANDARD WIRING DIAGRAM

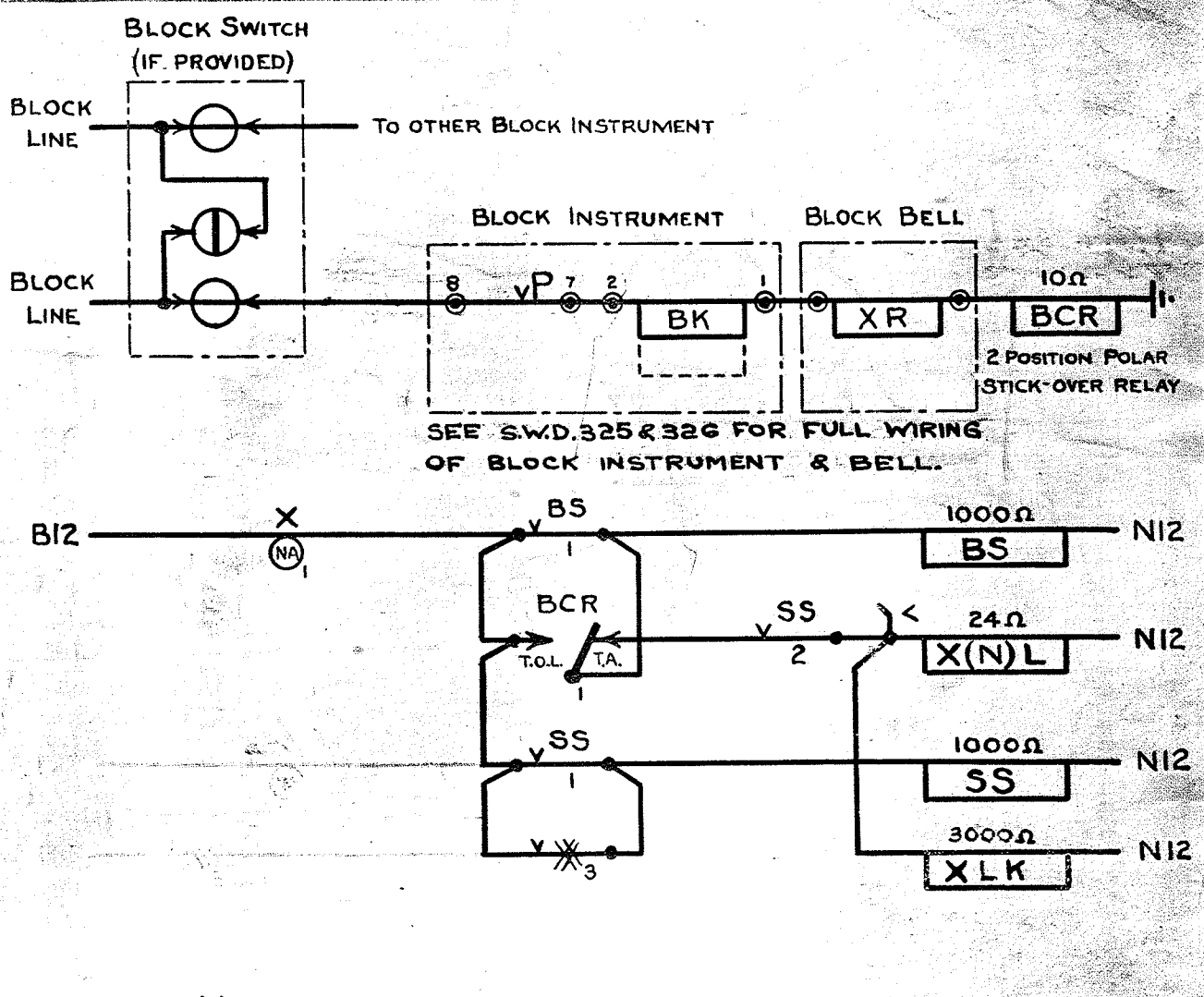

X STARTING SIGNAL LEVER.

$\mathbb{X}_3$ CONTACT IN TICKET BOX MADE WHEN LID OPEN.

LK LOCKED/FREE INDICATOR BALANCED TO "LOCKED"

NOTE. FOR DOUBLE LINE BLOCK (STARTING SIGNAL CONTROL) SEE SWD 313

TYERS ONE WIRE TWO INDICATION SINGLE LINE BLOCK.

CONTROL OF STARTING SIGNAL BY BLOCK AND TRAIN STAFF.

RELEASE EFFECTIVE FOR ONE MOVEMENT ONLY.

L.N.E.R. SOUTHERN AREA.
SIGNAL & TELEGRAPH ENGINEER'S OFFICE
KINGS CROSS STATION, N.1.

DRAWN BY J.O.G.
TRACED BY
CHECKED BY
DATE 23-6-44

SWD 327

25·1·52 | J.S.
FORMERLY SWD 19

STANDARD WIRING DIAGRAM

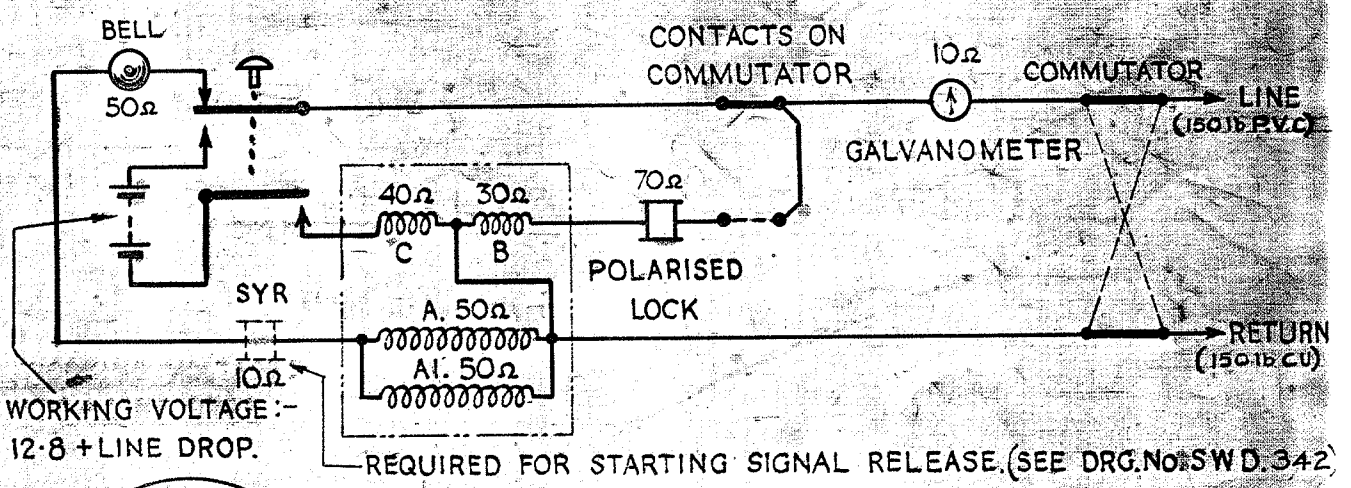

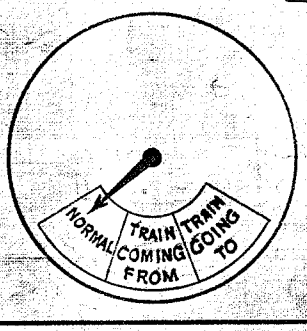

A & A1. POLARISED OR INDICATING COILS.

B. LIFTS STOP OUT TO ALLOW NEEDLE TO GO RIGHT OVER TO "TRAIN GOING TO" INDICATION.

C. PUTS STOP IN TO PREVENT NEEDLE GOING BEYOND "TRAIN COMING FROM" INDICATION.

METHOD OF OPERATION

OPERATION	A		B	
	INDICATION	COILS ENERGISED	INDICATION	COILS ENERGISED
'B' ASKS "IS LINE CLEAR"?	NORMAL	A, A1. (IN PHASE)	NORMAL	C. (STOP IN)
'A' REPLIES "LINE CLEAR" AND HOLDS IN	NORMAL	C. (STOP IN)	NORMAL	A, A1. (IN PHASE)
'A' HOLDS IN, 'B' TURNS COMM. TO 90°	NORMAL	C. (STOP IN)	NORMAL	B. (STOP OUT)
'A' HOLDS IN 'B' TURNS COMM. TO 180° & GIVES ONE PLUNGE TO 'A'	NORMAL	C. (STOP IN)	TRAIN GOING TO	A.A1. (OUT OF PHASE)
'B' SENDS "ENTERED SECTION."	TRAIN COMING FROM	A.A1. (OUT OF PHASE)	TRAIN GOING TO	C.
'A' ACKNOWLEDGES "ENTERED SECTION"	TRAIN COMING FROM	C.	TRAIN GOING TO	A.A1. (OUT OF PHASE)
TOKEN ARRIVES AT 'A' AND PLACED IN INSTRUMENT. COMM. TURNED TO 180°. 'A' GIVES OUT OF SECTION.	TRAIN COMING FROM	C.	NORMAL	A.A1. (IN PHASE)
'B' ACKNOWLEDGES "OUT OF SECTION"	NORMAL	A.A1. (IN PHASE)	NORMAL	C. (STOP IN)

"METHOD OF OPERATION" SUPERSEDES DRG. No. LV. 4236

NOTE WHERE LONG & SHORT SECTION WORKING IS IN FORCE OR INTERMEDIATE INSTRUMENTS ARE USED, INDICATOR DIAL IS MODIFIED TO READ 'TOKEN IN' IN PLACE OF 'NORMAL', & 'TOKEN OUT' IN PLACE OF 'TRAIN COMING FROM' & 'TRAIN GOING TO'.

21-9-50	D	A	19-5-52	J.A.S.	B 15-3-57 NOTE ADDED. SEQUENCE OF OPERATION AMENDED N.M.

FORMERLY SWD. 3. TYPE OF LINE WIRE INDICATED

TYER'S KEY TOKEN INSTRUMENT. ORIGINAL FORM.

T.W.E.
T.W.E.

SWD.341 B

1. 8. 40.

STANDARD WIRING DIAGRAM

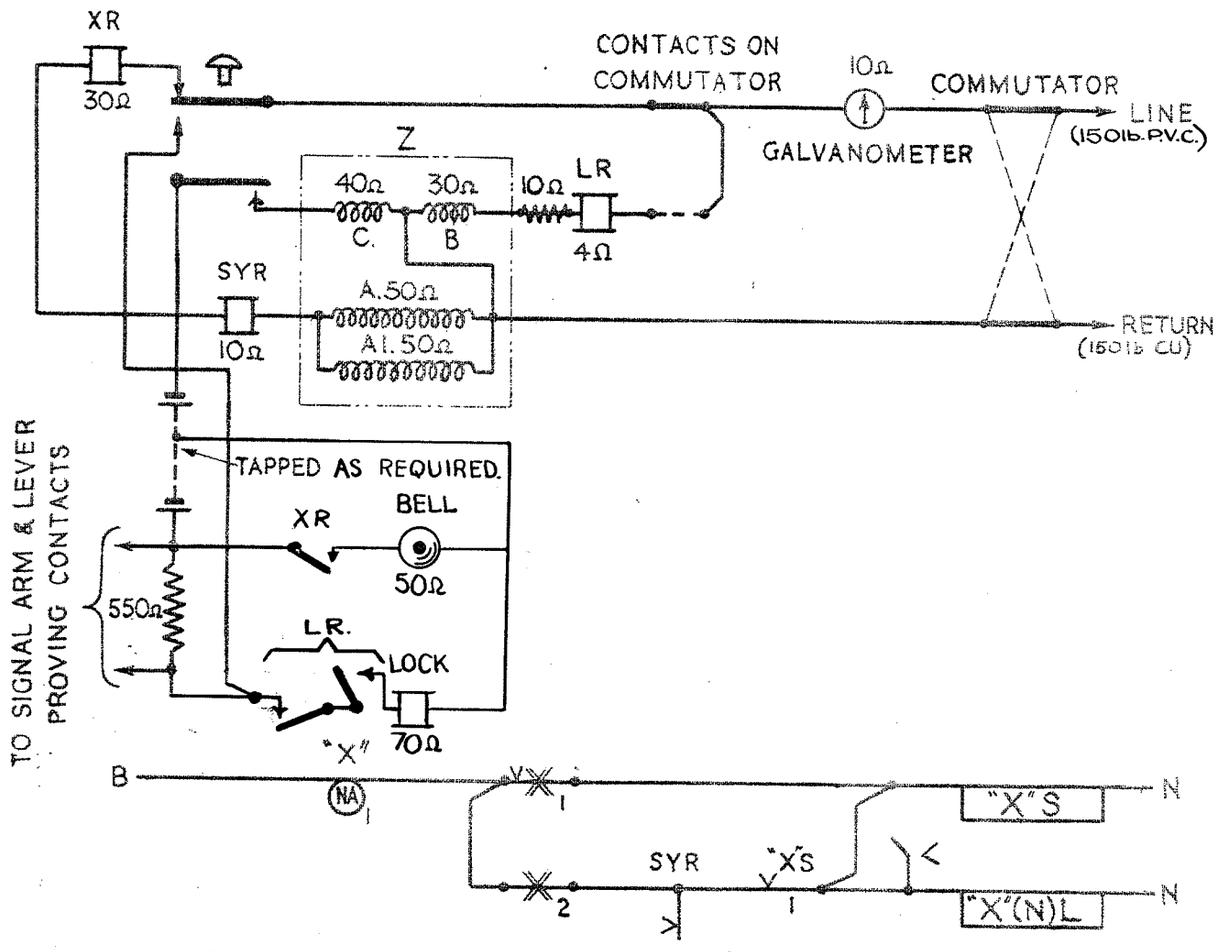

X_1 CONTACT MADE MOMENTARILY WHEN KEY TOKEN WITHDRAWN
X_2 " BROKEN " " " " INSERTED
Z INDICATOR. (FOR DETAILS SEE DRG. NO. SWD. 341)

TYPES OF RELAYS.

XR. TELEPHONE TYPE
LR. NEUTRAL POLAR REWOUND TO 4Ω
SYR. BRASS CASED POLAR REWOUND TO 10Ω

A	19-8-52	TYPE OF LINE WIRE INDICATED	
	21-9-50	FORMERLY S.W. 04	
	3-4-43	DETAILS OF RELAYS ADDED.	

TYER'S KEY TOKEN INSTRUMENT.

WITH SIGNAL PROVING & STARTING SIGNAL RELEASE EQUIPMENT.

L.N.E.R. SOUTHERN AREA.
SIGNAL & TELEGRAPH ENGINEERS OFFICE
KINGS CROSS STATION, N.1.

DRAWN BY. T.W.E.	SWD. 342
TRACED BY. T.W.E.	
CHECKED BY.	DATE. 3.8.40.

STANDARD. WIRING. DIAGRAM.

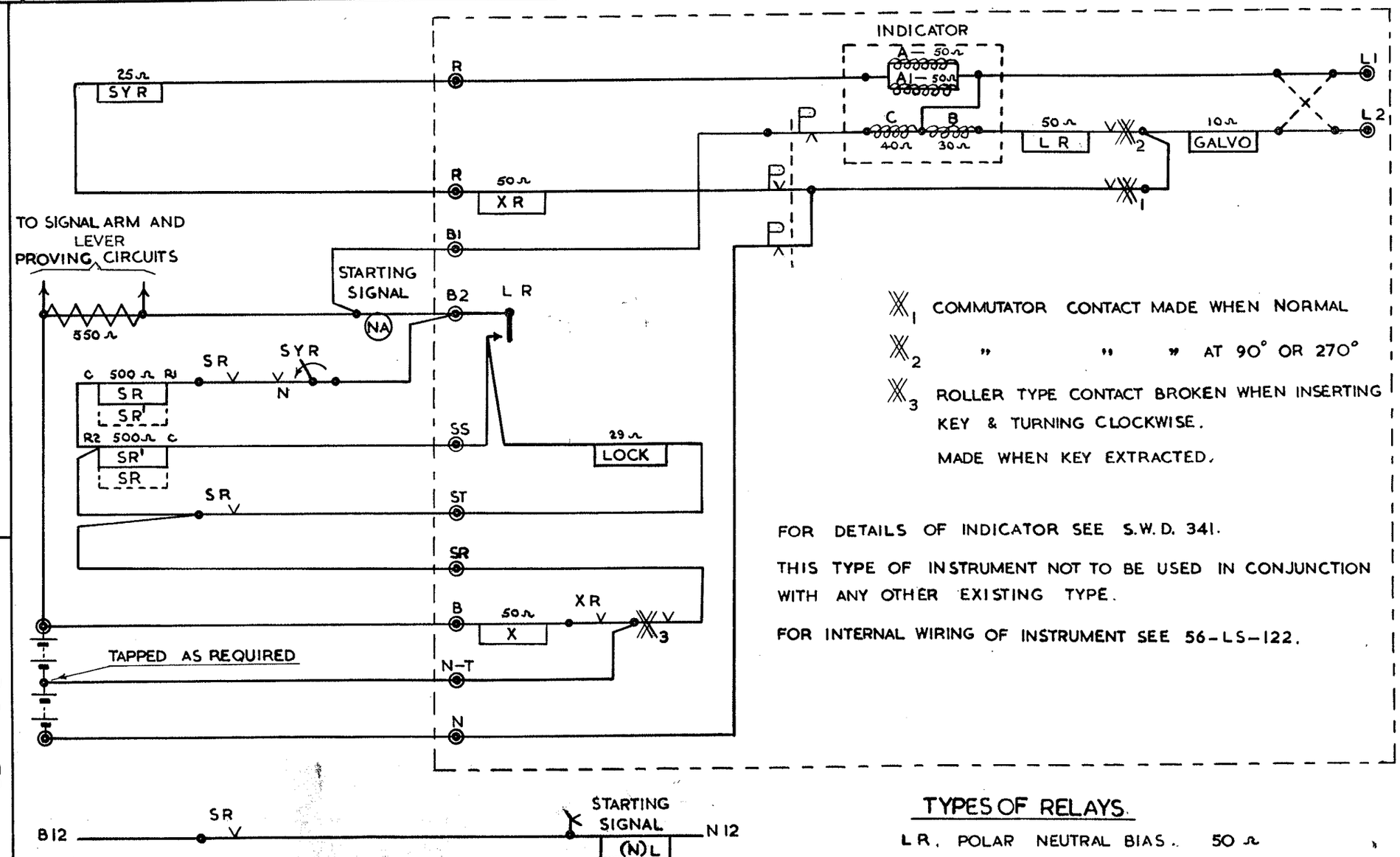

X_1 COMMUTATOR CONTACT MADE WHEN NORMAL

X_2 " " " AT 90° OR 270°

X_3 ROLLER TYPE CONTACT BROKEN WHEN INSERTING KEY & TURNING CLOCKWISE.
MADE WHEN KEY EXTRACTED.

FOR DETAILS OF INDICATOR SEE S.W.D. 341.

THIS TYPE OF INSTRUMENT NOT TO BE USED IN CONJUNCTION WITH ANY OTHER EXISTING TYPE.

FOR INTERNAL WIRING OF INSTRUMENT SEE 56-LS-122.

TYPES OF RELAYS.

L R.	POLAR	NEUTRAL BIAS.	50 Ω
SYR.	POLAR	NORMAL BIAS.	25 Ω
S R.	LINE RELAY. (SEPARATE COILS)		500Ω + 500Ω

TYERS KEY TOKEN
INSTRUMENT TYPE 12A II

WITH SIGNAL PROVING AND STARTING SIGNAL RELEASE.

B.R. ~ ER.
SIGNAL ENGRS: DEPT:
KINGS CROSS STATION.

DRAWN BY. GRS
TRACED BY. GRS
CHECKED BY. NM
DATE. 1·6·56

S.W.D. 343

	21-9-50	
FORMERLY S.W.D. 2.		
A	17-1 52	B.O.B

NOTE: WHEN USED WITH SWD 342 ADDED

STANDARD WIRING DIAGRAM

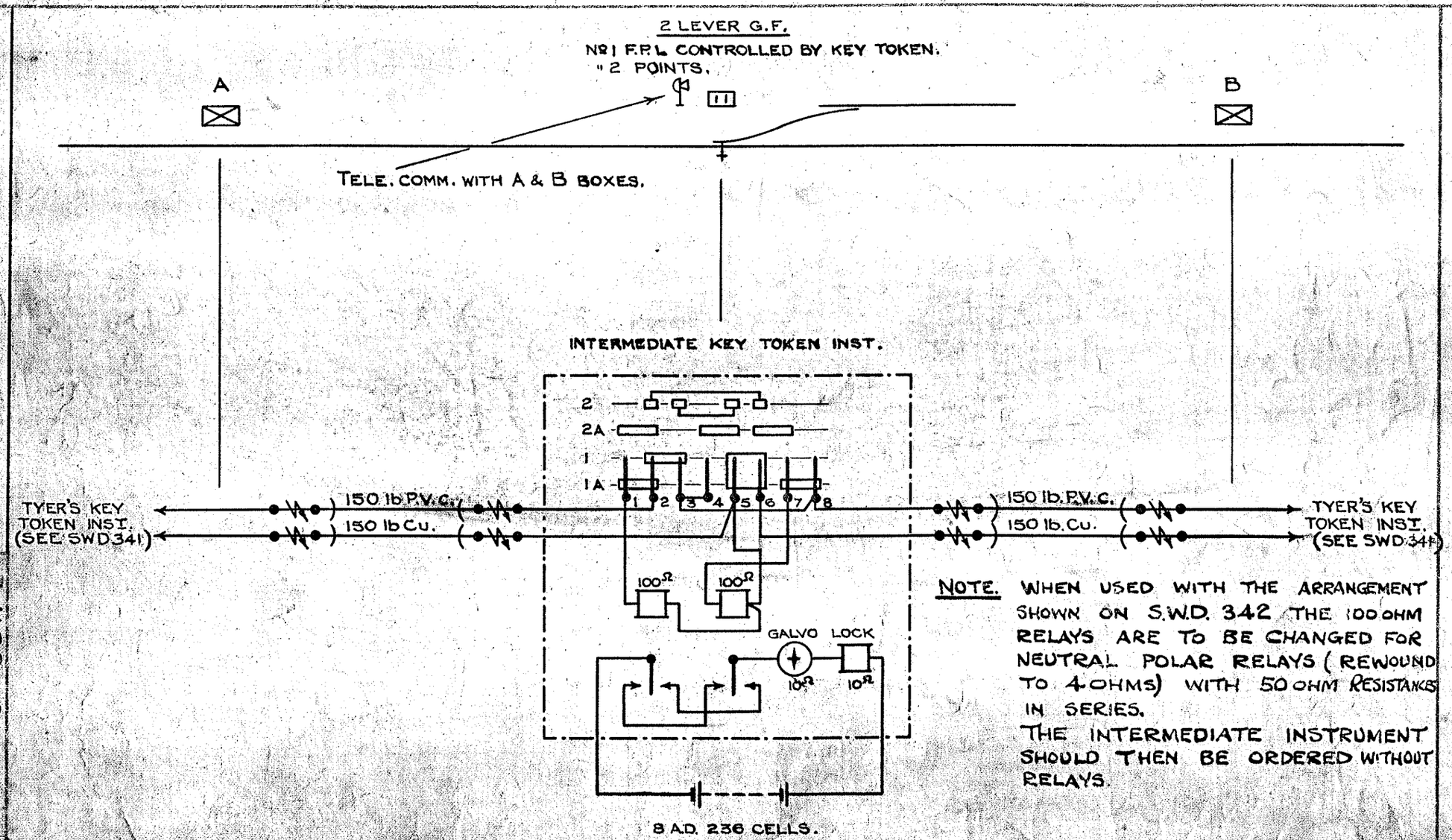

NOTE. WHEN USED WITH THE ARRANGEMENT SHOWN ON S.W.D. 342 THE 100 OHM RELAYS ARE TO BE CHANGED FOR NEUTRAL POLAR RELAYS (REWOUND TO 4 OHMS) WITH 50 OHM RESISTANCE IN SERIES.
THE INTERMEDIATE INSTRUMENT SHOULD THEN BE ORDERED WITHOUT RELAYS.

TO OBTAIN KEY SHUNTER TELEPHONES A & B SIGNAL BOXES & TURNS KEY THRO' 90°.
SIGNALMEN AT A & B PLUNGE SIMULTANEOUSLY ON MAIN TOKEN INSTS, & IF THESE ARE IN PHASE THE GALVO. OF THE INTER. TOKEN INST. WILL SHOW 'FREE' & THE LOCK BE RELEASED TO ENABLE THE SHUNTER TO TURN THE KEY THRO' A FURTHER 90° & WITHDRAW IT.

TYER'S INTERMEDIATE KEY TOKEN INSTRUMENT.

L.N.E.R. SOUTHERN AREA
SIGNAL & TELEGRAPH ENGINEER'S OFFICE
KINGS CROSS STATION, N.1

DRAWN BY F.M.F
TRACED BY F.M.F
CHECKED BY
DATE 2.6.47

SWD. 345

STANDARD WIRING DIAGRAM

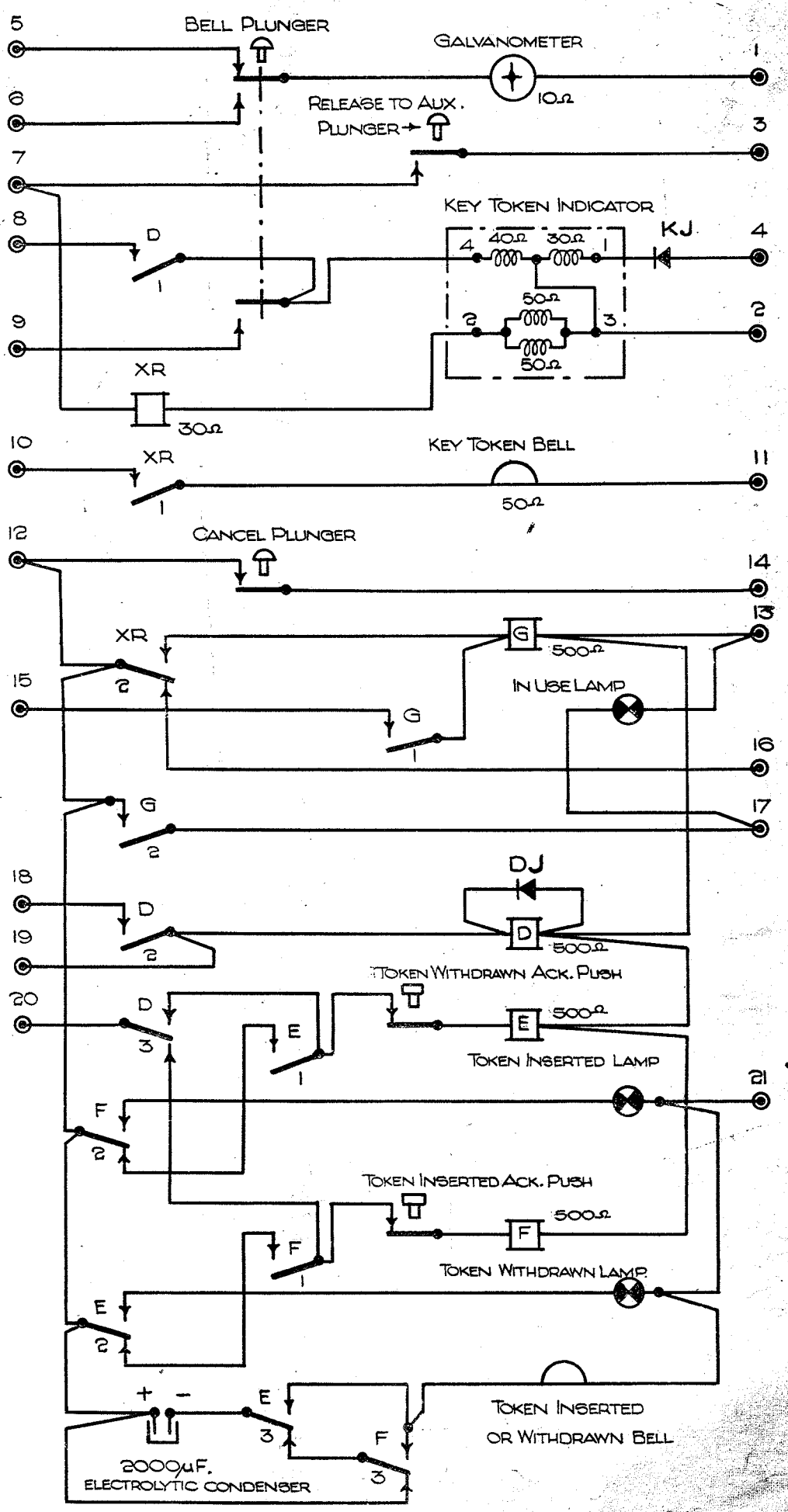

25·1·52	J.S.	FORMERLY S.W.D. 127	

KEY TOKEN PLUNGING UNIT

INTERNAL WIRING.

L.N.E.R. SOUTHERN AREA.
SIGNAL & TELEGRAPH ENGINEER'S OFFICE
KINGS CROSS STATION, N.1.

DRAWN BY J.R.McL.	SWD 346
TRACED BY O.M.S.	
CHECKED BY [illegible]	DATE 1.2.44

	25·1·52	J.S	A	19·5·52	J.A.S

FORMERLY S.W.D. 50

TYPE OF LINE WIRE INDICATED.

STANDARD WIRING DIAGRAM

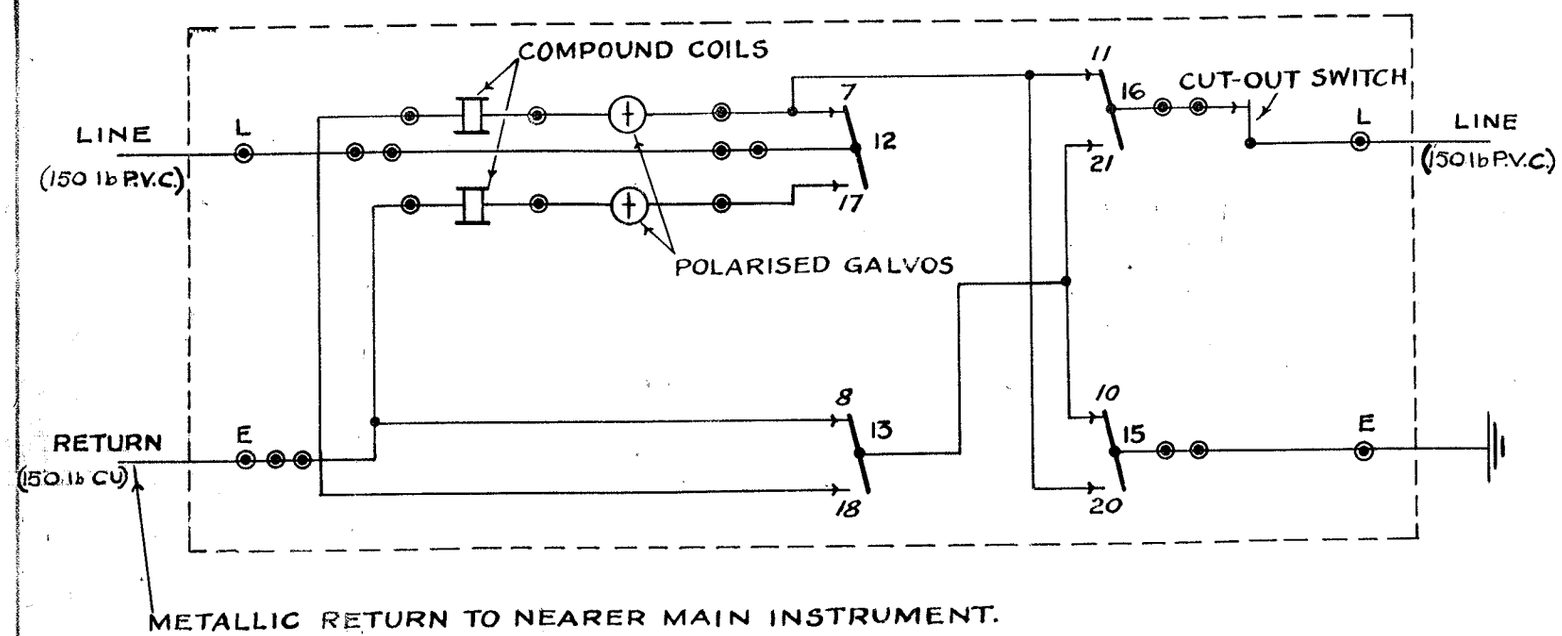

12, 13 } OPERATED WHEN STAFF LIFTED. RETURNS TO POSITION SHEWN WHEN STAFF WITHDRAWN.

15, 16 } OPERATED AUTOMATICALLY WHEN STAFF TAKEN OUT OR REPLACED.

L.N.E.R. SOUTHERN AREA.

ELEC. TRAIN STAFF INSTRUMENTS.

WIRING OF WEBB & THOMPSON LARGE TYPE SUBSIDIARY INSTRUMENT.

L.N.E.R. SOUTHERN AREA
SIGNAL & TELEGRAPH ENGINEER'S OFFICE
KINGS CROSS STATION

DRAWN BY S.W.S.
TRACED BY S.W.S.
CHECKED BY
DATE 10-2-42.

SWD 360 A

STANDARD WIRING DIAGRAM

1

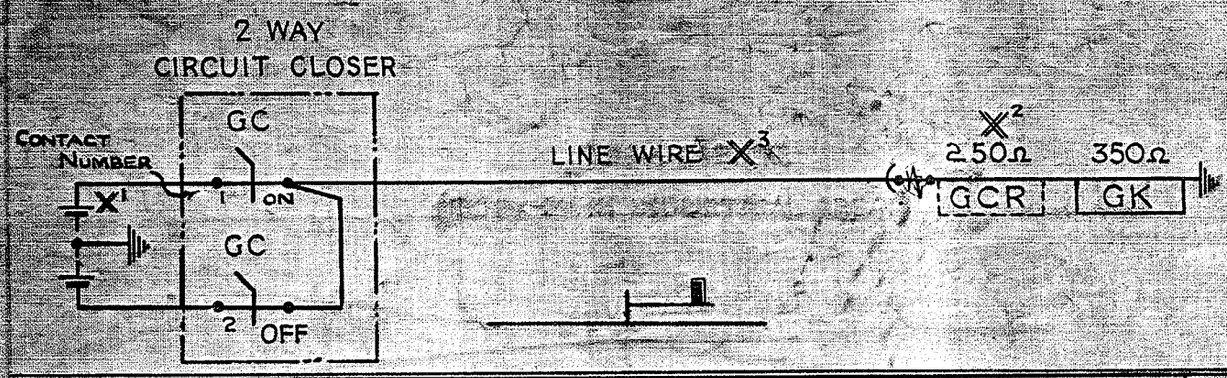

2

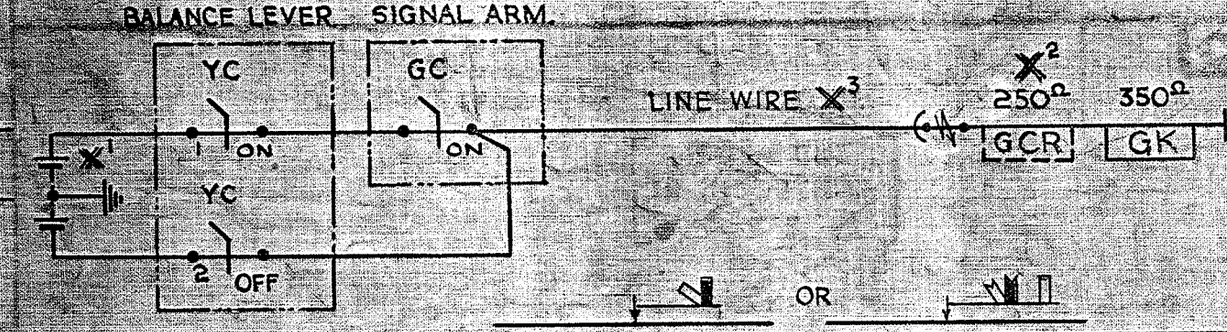

X1 BATTERIES REQUIRED (SEE BELOW)

CIRCUIT	NUMBER OF CELLS "ON" SIDE	NUMBER OF CELLS "OFF" SIDE
ITEMS 1 & 2 (WITHOUT GCR)	2	2
ITEMS 1 & 2 (WITH GCR)	5	3

WK2 CELLS FOR SINGLE REPEATER.
AW4 CELLS FOR MORE THAN ONE REPEATER FED FROM SAME BATTERY.

NOTES

X2 GCRs

FOR SINGLE CIRCUIT USE SCH. 415, ITEM 435/10

FOR DOUBLE CIRCUIT USE SCH. 415, ITEM 435/15

X3 LINE WIRE

150 lbs. CU. IN INDUSTRIAL AREAS,
100 lbs. CADMIUM CU. ELSEWHERE.

SIGNAL REPEATER CIRCUITS.

1. ARM ONLY
2. ARM & BALANCE LEVER (CONTROLLED SIGNAL)

L.N.E.R. SOUTHERN AREA.
SIGNAL & TELEGRAPH ENGINEER'S OFFICE
KINGS CROSS STATION, N.1.

DRAWN BY E.A.R.
TRACED BY T.W.E.
CHECKED BY
DATE

SWD.401 B

ITEM REFERENCE CHANGED	1	2	3	4	5	6	7	8	9	10	11	12	13	14
BATTERY CELL DESCRIPTIONS MODIFIED														
	A	B												
	10000Ω RESISTANCE INCLUDED IN E.K. CIRCUIT. LINE WIRE NOW DELETED.													
	FORMERLY S.W.O.S. INDICATION LIMITS DELETED.													
	9	A	19	5	52	1AS								
	Q1 SETTING OF CC'S AMENDED TO "ON" EIQ NOTE AMENDED													
	8	29	12	61	U.P.									
	COMBINED ARM & LIGHT REPEATER CCT. DELETED. ITEM 2 WAS ITEM 3.													

STANDARD WIRING DIAGRAM

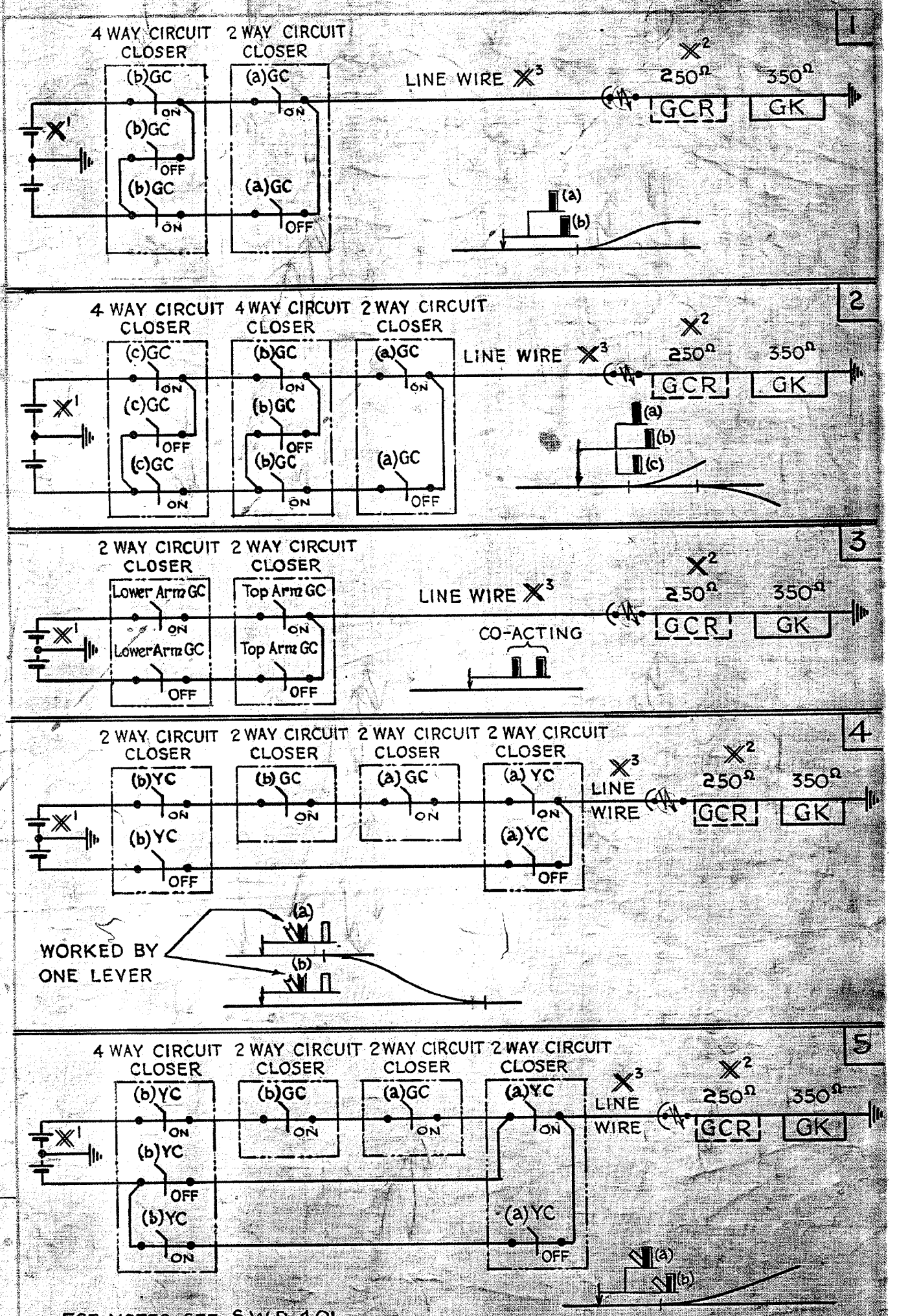

FOR NOTES SEE S.W.D. 401.

SIGNAL REPEATER CIRCUITS

1. ARMS ONLY, FOR TWO DIVERGING LINES.
2. ARMS ONLY, FOR THREE DIVERGING LINES.
3. ARMS ONLY, FOR TWO CO-ACTING.
4. ARMS & SLOTS, FOR TWO CONVERGING LINES.
5. ARMS & SLOTS, FOR TWO DIVERGING LINES.

L.N.E.R. SOUTHERN AREA
SIGNAL & TELEGRAPH ENGINEER'S OFFICE
KINGS CROSS STATION N.1.

DRAWN BY E.A.R.
TRACED BY T.W.E.
CHECKED BY
DATE 15.11.40.

S.W.D.402A

21-9-50		A	19.5.52	J.A.S

FORMERLY S.W.D.6 — 0° SETTING OF CC'S AMENDED TO "ON"

STANDARD WIRING DIAGRAM

1

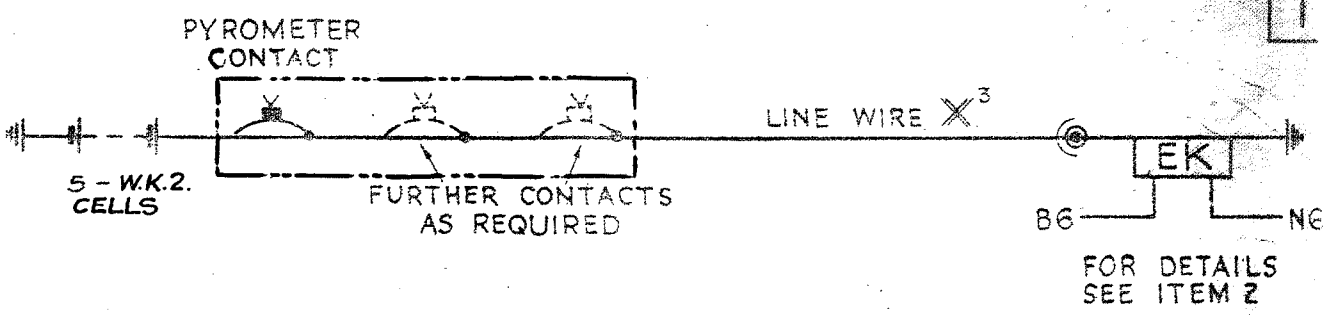

2

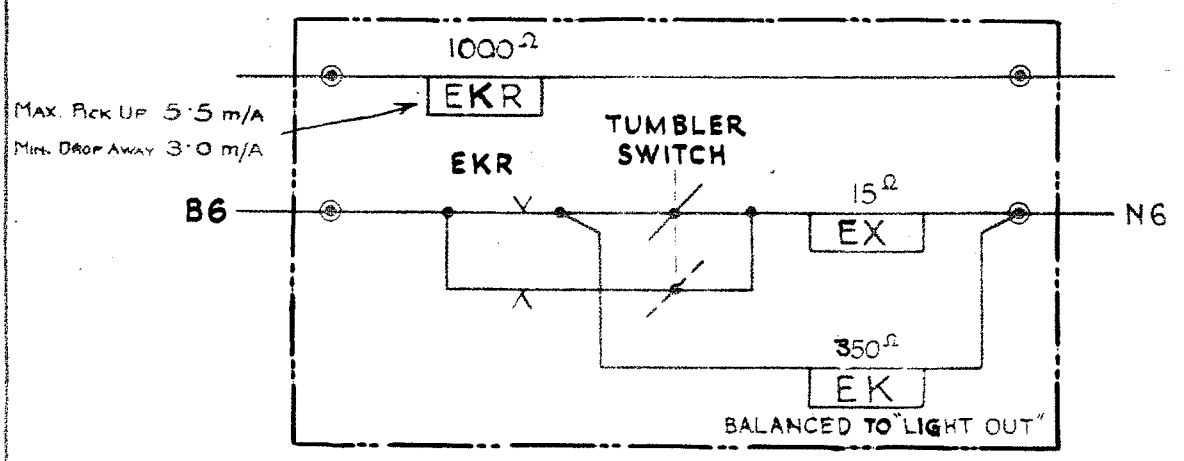

LIGHT INDICATOR UNIT

WHERE AVAILABLE, THE CABIN BATTERY IS TO BE TAPPED TO OBTAIN THE 6v. LOCAL SUPPLY.

A	ITEM REFERENCE CHANGED.		
B	6-8-48	ITEM Nº1, 7 CELLS REQUIRED ITEM Nº2, RELAY CHARACTERISTICS ADDED.	KAP.
	21-9-50	FORMERLY S.W.D. 7	

FOR NOTES SEE S.W.D.401

SIGNAL REPEATER CIRCUITS

1. LIGHT ONLY
2. LIGHT INDICATOR UNIT (INTERNAL WIRING)

L.N.E.R. SOUTHERN AREA.
SIGNAL & TELEGRAPH ENGINEER'S OFFICE
KINGS CROSS STATION N.1

DRAWN BY E.A.R.	SWD.403
TRACED BY T.W.E.	
CHECKED BY	DATE 20.11.40.

A	8·2·52	JS

FORMERLY SWD.34

STANDARD WIRING DIAGRAM

COLOUR LIGHT SIGNALS
ELECTRICALLY OPERATED
2 ASPECT DISTANT
Ssearchlight.

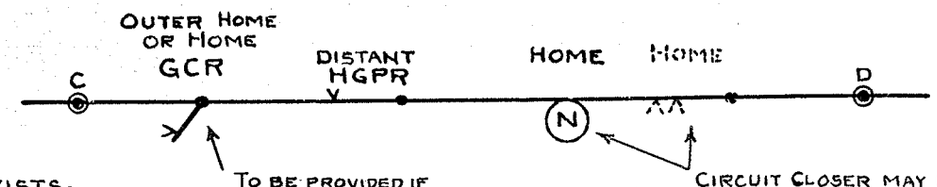

NOTE. IF NO BLOCK CONTROL EXISTS, IT SHOULD BE PROVIDED IN ACCORDANCE WITH SWD 312.

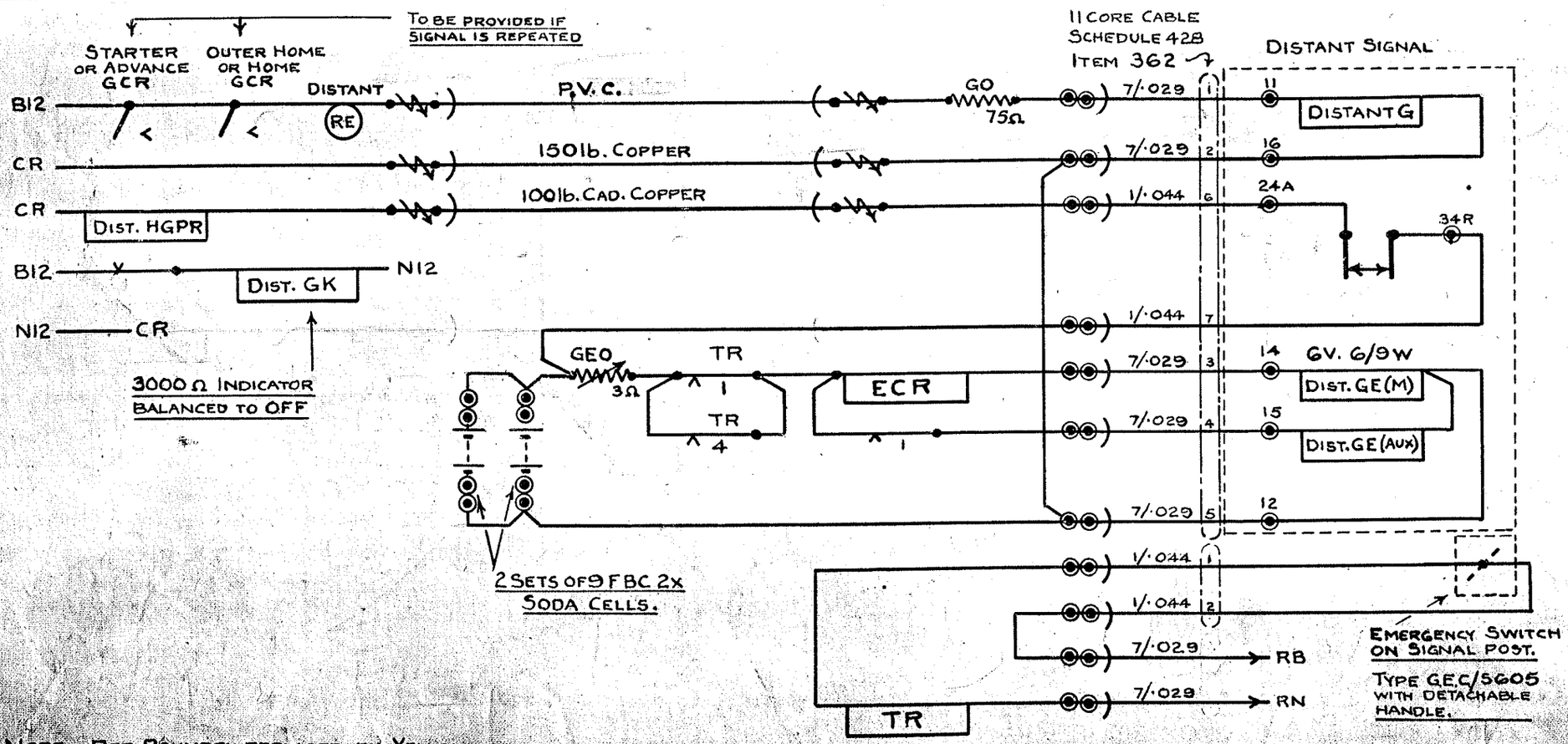

NOTE. RED ROUNDEL REPLACED BY YELLOW.

L.N.E.R. SOUTHERN AREA
CHIEF ENGINEER'S OFFICE, KING'S CROSS STATION, N.1.

DRAWN 8.2.52
TRACED
CHECKED
DATE 8-7-47

SWD 414

A	1·2·55		B	5 - 7 - 61	JP
BLOCK SWITCH CONTACT CONNECTED ACROSS A.TR IN FIG.2 INSTEAD OF ACROSS 1 (N) LEVER CONTACT. NM.			SIGNAL CONTACT SETTINGS ALTERED TO READ 'OFF' RR		

STANDARD WIRING DIAGRAM

2 ASPECT COLOUR LIGHT DISTANT SIGNAL. CONTROL CIRCUITS.

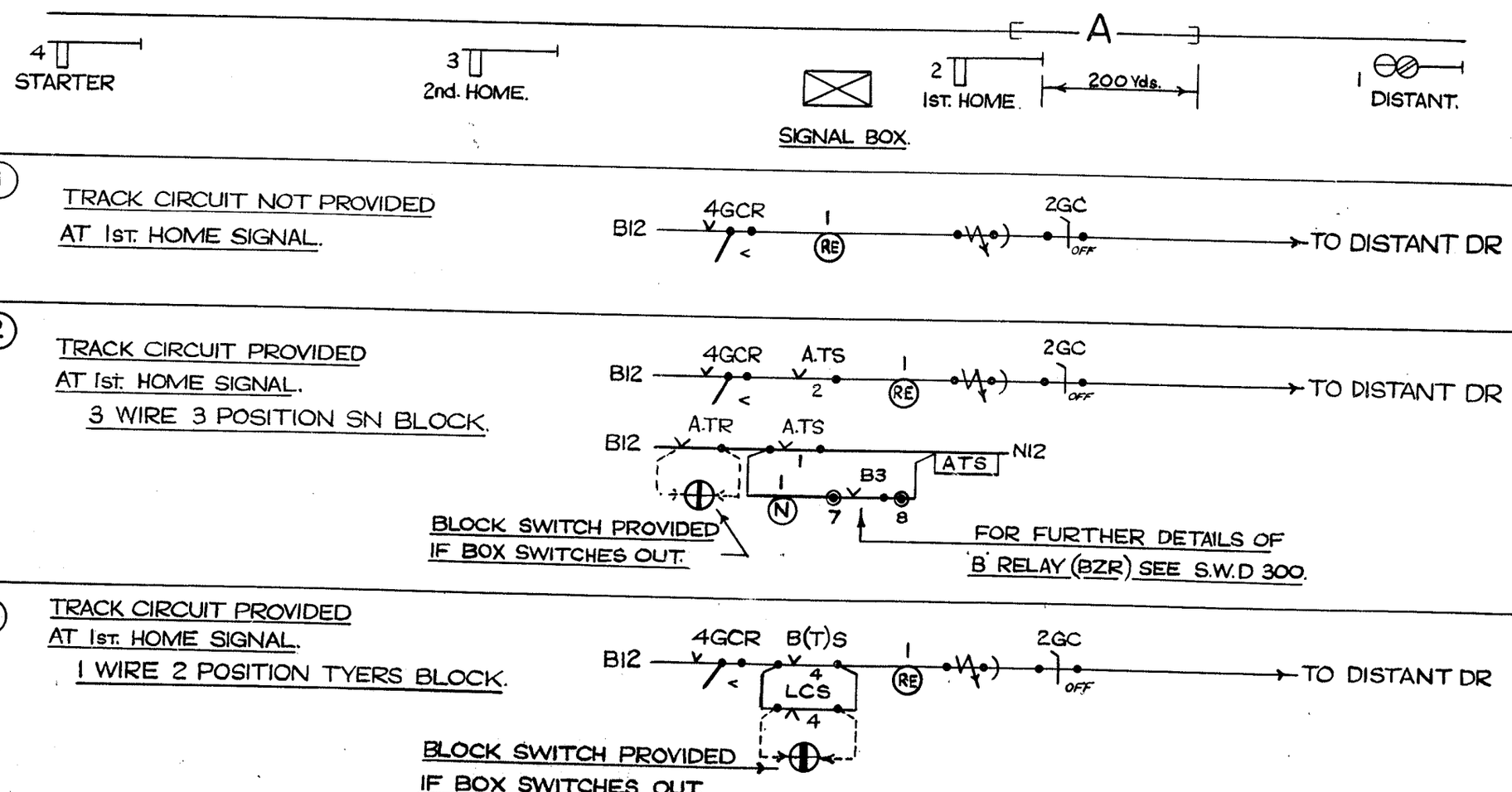

NOTES

ARMS TO BE PROVED OFF IN THE FOLLOWING CASES:-

1. SIGNALS WHICH ARE REPEATED.
2. SIGNALS WITH MECHANICAL DETECTION.
3. WHERE THE CONTROL WIRE OF THE DR PASSES BY A SIGNAL.

FOR COMPLETE WIRING OF BLOCK INSTRUMENTS,
SEE DRAWING S.W.D. 300. (3 WIRE, 3 POSITION.)
" " S.W.D. 322. (1 WIRE, 2 POSITION.)

RAILWAY EXECUTIVE-EASTERN REGION.
SIGNAL & TELECOMMUNICATIONS ENGR OFFICE.
KINGS CROSS STATION. N.1.

DRAWN BY V.C.
TRACED BY R.S.T.
CHECKED BY N.M.
DATE. 10·2·53

SWD 416. B

STANDARD WIRING DIAGRAM

INTERMEDIATE BLOCK SIGNAL

"TRAIN RUNNING AWAY" INDICATION

SEPARATE OVERLAP TRACK NOT PROVIDED

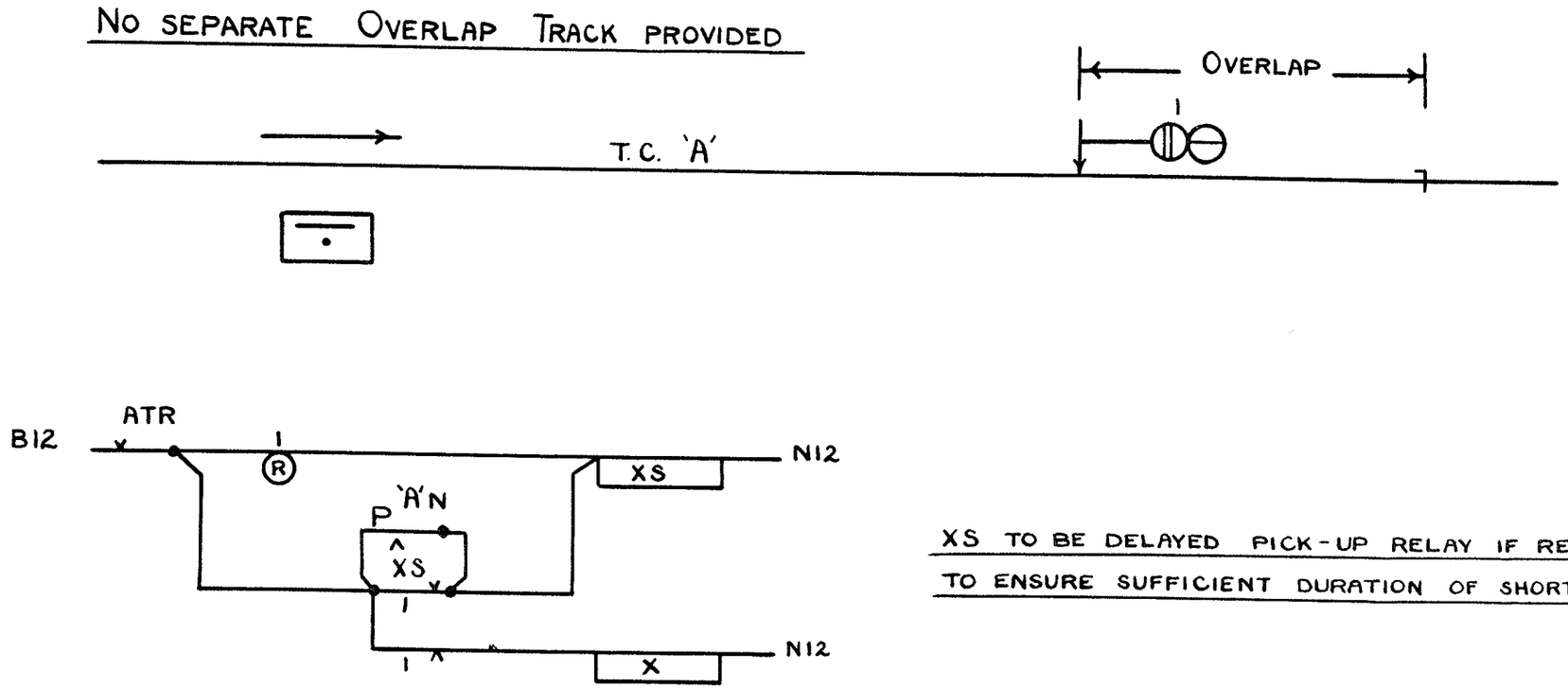

XS TO BE DELAYED PICK-UP RELAY IF REQUIRED, TO ENSURE SUFFICIENT DURATION OF SHORT RING.

NOTES.

IF LEVER No. 1 IS REVERSE, A SHORT RING IS GIVEN WHEN THE TRAIN CLEARS THE OVERLAP.

IF LEVER No. 1 IS NORMAL, A CONTINUOUS RING IS GIVEN WHEN THE TRAIN CLEARS THE OVERLAP.

'A'N = ACKNOWLEDGEMENT PLUNGER.

RAILWAY EXECUTIVE - EASTERN REGION

SIGNAL & TELECOMMUNICATIONS ENG^R OFFICE
KINGS CROSS STATION N.1.

DRAWN BY V.C.

TRACED BY Y.R.

CHECKED BY N.M

S.W.D. 420

DATE 23.3.53.

STANDARD WIRING DIAGRAM

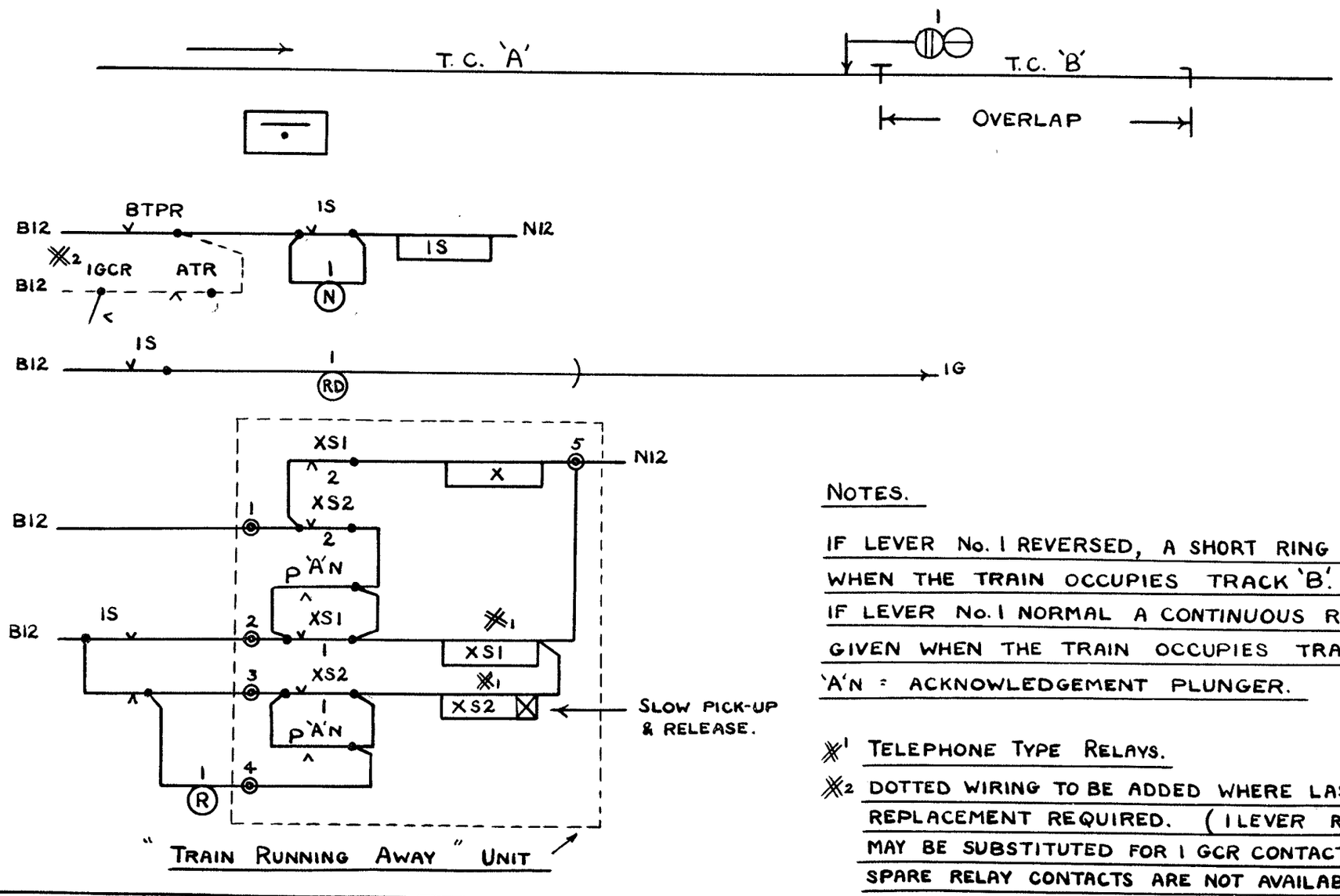

NOTES.

IF LEVER No. 1 REVERSED, A SHORT RING IS GIVEN WHEN THE TRAIN OCCUPIES TRACK 'B'.

IF LEVER No. 1 NORMAL A CONTINUOUS RING IS GIVEN WHEN THE TRAIN OCCUPIES TRACK 'B'.

'A'N = ACKNOWLEDGEMENT PLUNGER.

※1 TELEPHONE TYPE RELAYS.

※2 DOTTED WIRING TO BE ADDED WHERE LAST WHEEL REPLACEMENT REQUIRED. (1 LEVER RD CONTACT MAY BE SUBSTITUTED FOR 1 GCR CONTACT WHERE SPARE RELAY CONTACTS ARE NOT AVAILABLE.)

INTERMEDIATE BLOCK SIGNAL

"TRAIN RUNNING AWAY" INDICATION

SEPARATE OVERLAP TRACK PROVIDED

RAILWAY EXECUTIVE - EASTERN REGION

SIGNAL & TELECOMMUNICATIONS ENG^R. OFFICE KINGS CROSS STATION N.1.

DRAWN BY V.C.

TRACED BY Y.R.

CHECKED BY N.M.

DATE 23.3.53.

S.W.D. 421

STANDARD WIRING DIAGRAM

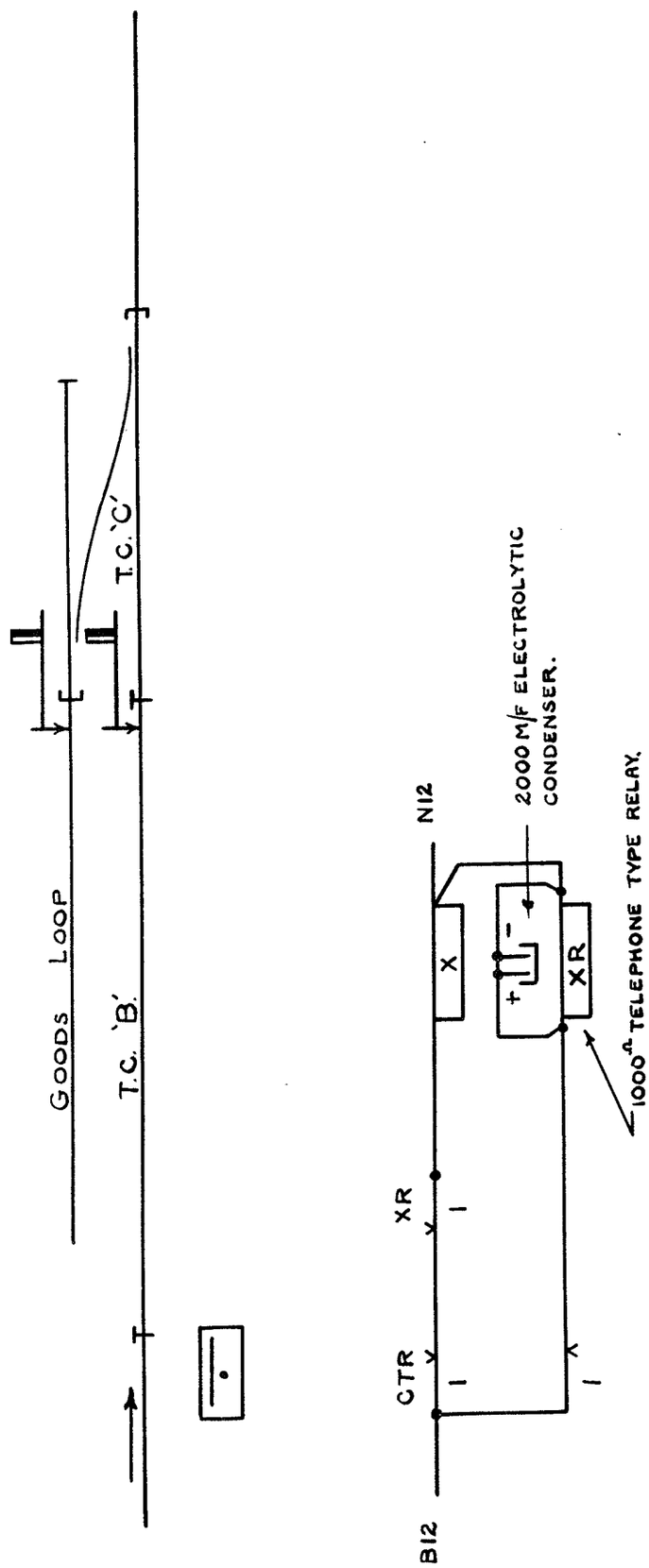

NOTE:- BUZZER SOUNDS WHEN TRACK CIRCUIT OCCUPIED & CLEARED.

INTERMEDIATE BLOCK SIGNAL "TRAIN PAST" AUDIBLE INDICATION CIRCUIT	RAILWAY EXECUTIVE-EASTERN REGION SIGNAL & TELECOMMUNICATIONS ENGINEER OFFICE KINGS CROSS STATION N.1.
	DRAWN BY V.C. TRACED BY Y.R. CHECKED BY N.M.
	S.W.D. 422 DATE 23.3.53.

STANDARD WIRING DIAGRAM

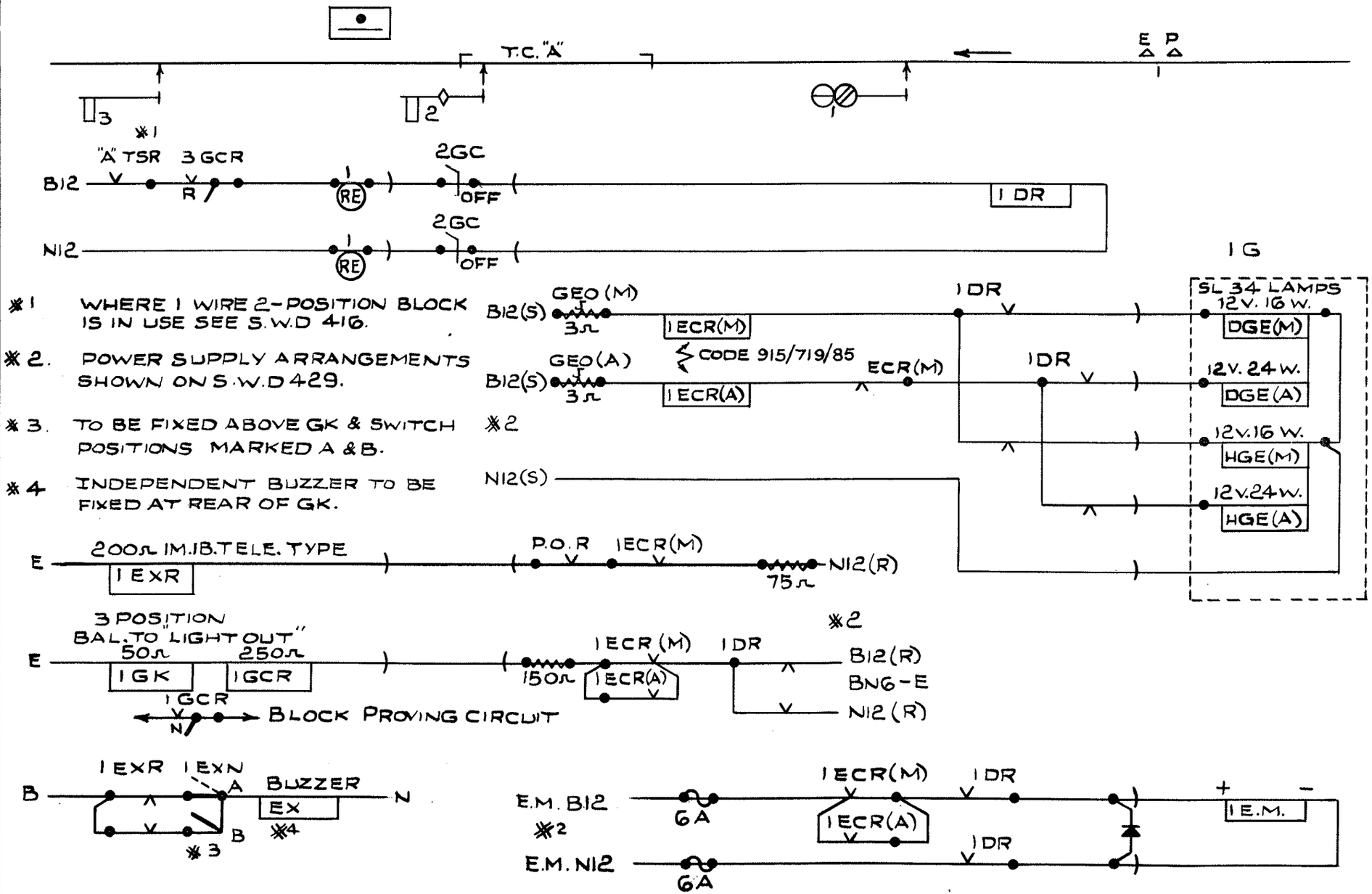

※1 WHERE 1 WIRE 2-POSITION BLOCK IS IN USE SEE S.W.D 416.

※2. POWER SUPPLY ARRANGEMENTS SHOWN ON S.W.D 429.

※3. TO BE FIXED ABOVE GK & SWITCH POSITIONS MARKED A & B.

※4 INDEPENDENT BUZZER TO BE FIXED AT REAR OF GK.

COLOUR LIGHT SIGNALS
MULTI-UNIT TYPE
WITH LAMP PROVING
2-ASPECT DISTANT

CHIEF S.& T. ENGINEER'S DEPT.
B.R.~E.R.

DRAWN BY H.C.
TRACED BY P.A.G.
CHECKED BY RR
DATE 14.4.65

SWD 423

STANDARD WIRING DIAGRAM

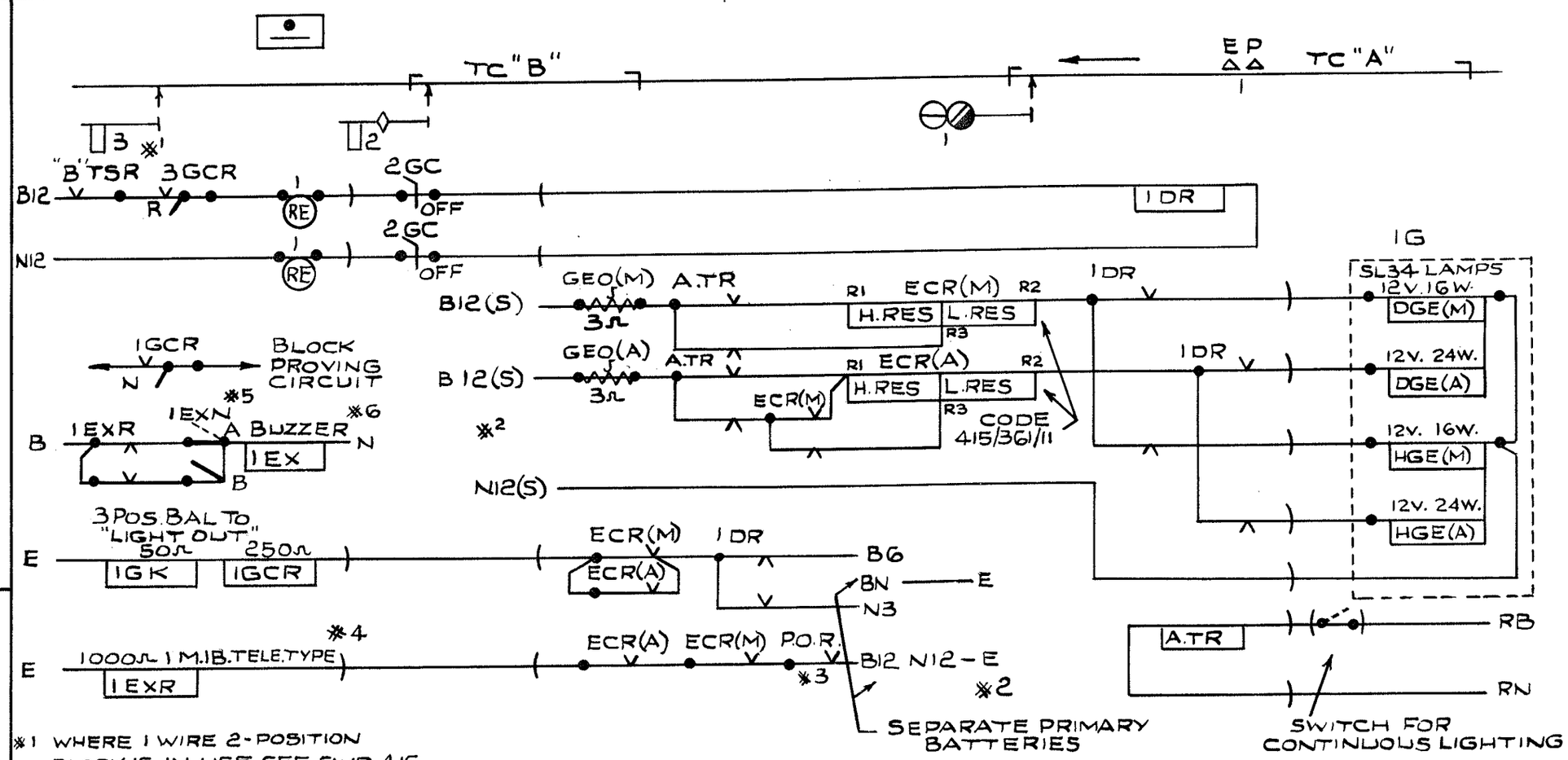

※1 WHERE I WIRE 2-POSITION BLOCK IS IN USE SEE S.W.D. 416

※2 WHERE POWER SUPPLY IS AVAILABLE BATTERIES TO BE AS SHOWN ON S.W.D. 429

※3 A.C. P.O.R REQUIRED IF POWER SUPPLY PROVIDED

※4 200Ω RELAY TO BE USED WHEN TRICKLE CHARGED REPEATER BATTERY IS PROVIDED

※5 TO BE FIXED ABOVE GK & SWITCH POSITIONS MARKED A & B.

※6 INDEPENDENT BUZZER TO BE FIXED AT REAR OF GK.

COLOUR LIGHT SIGNALS
MULTI-UNIT TYPE
WITH LAMP PROVING
2-ASPECT DISTANT
WITH APPROACH LIGHTING

CHIEF S.&T. ENGINEER'S DEPT.
B.R.~E.R.

DRAWN BY H.C.
TRACED BY P.A.G.
CHECKED BY RR
DATE 14.4.65

SWD 424

STANDARD WIRING DIAGRAM

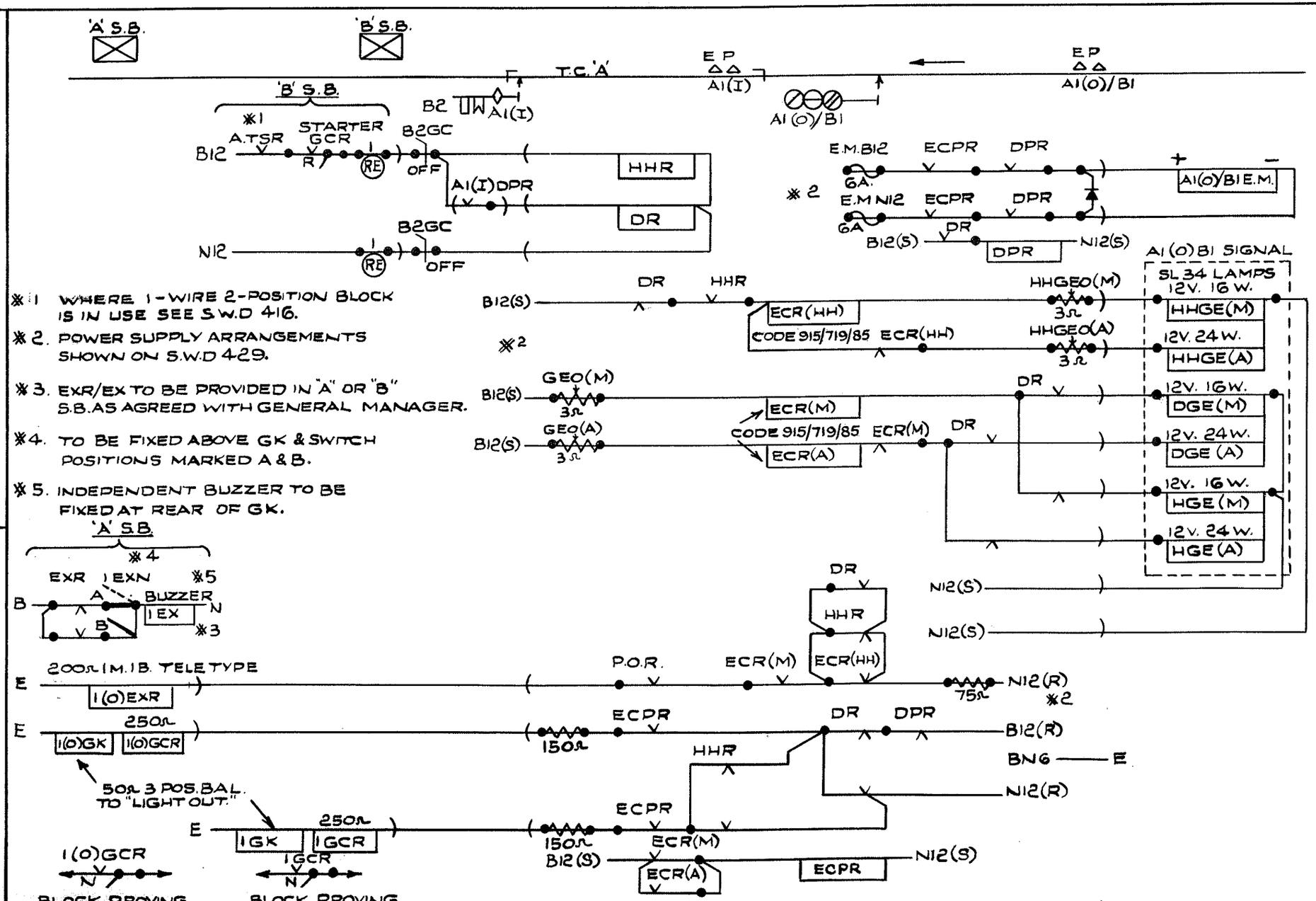

※1 WHERE 1-WIRE 2-POSITION BLOCK IS IN USE SEE S.W.D 416.

※2. POWER SUPPLY ARRANGEMENTS SHOWN ON S.W.D 429.

※3. EXR/EX TO BE PROVIDED IN "A" OR "B" S.B. AS AGREED WITH GENERAL MANAGER.

※4. TO BE FIXED ABOVE GK & SWITCH POSITIONS MARKED A & B.

※5. INDEPENDENT BUZZER TO BE FIXED AT REAR OF GK.

COLOUR LIGHT SIGNALS
MULTI-UNIT TYPE
WITH LAMP PROVING
3-ASPECT DISTANT
CONTROLLED FROM TWO S.B.'S

CHIEF S.&T. ENGINEER'S DEPT.

BR.~ER.

DRAWN BY H.C.

TRACED BY P.A.G.

CHECKED BY RR

DATE 14.4.65

SWD 425

STANDARD WIRING DIAGRAM

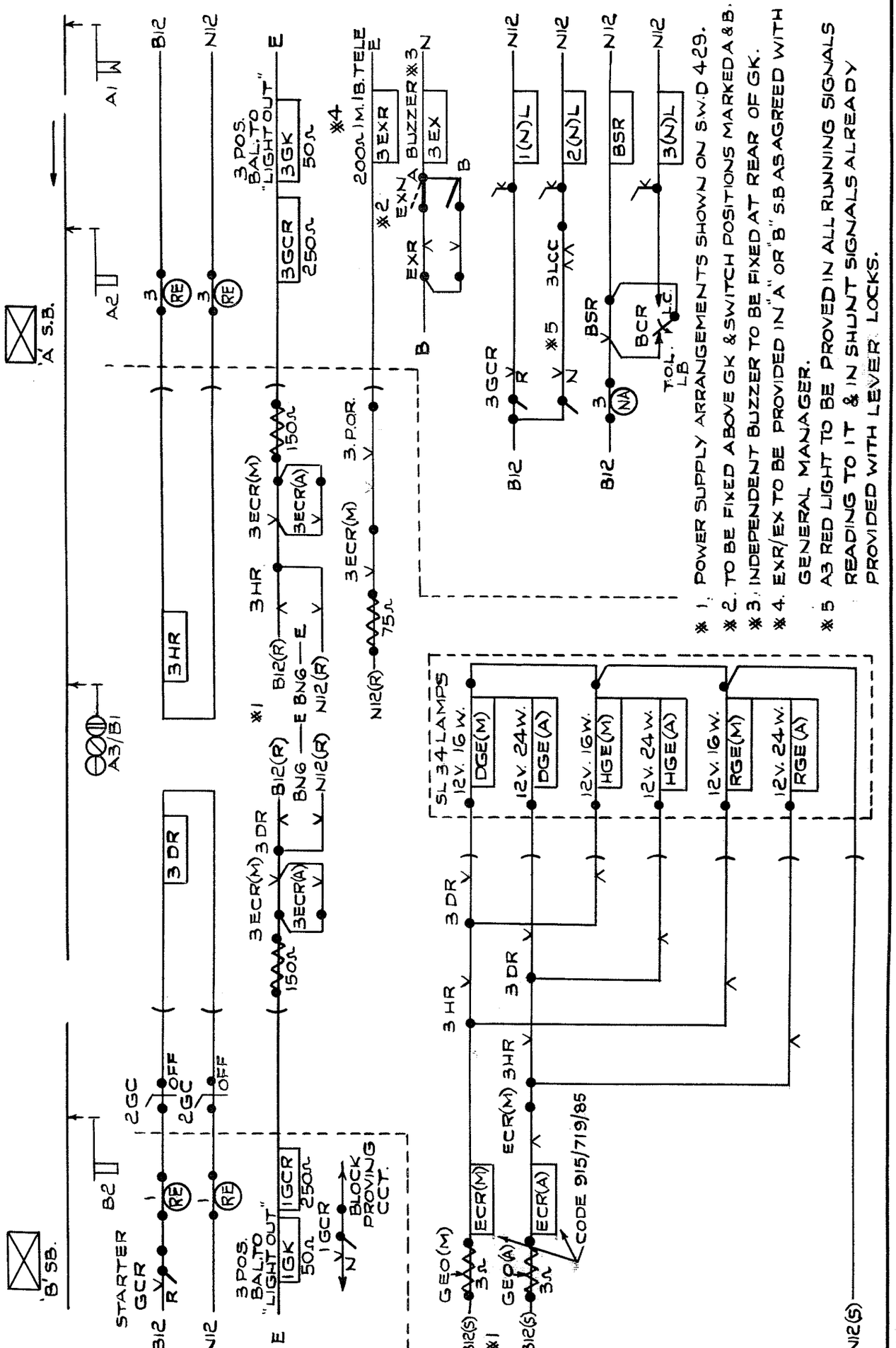

COLOUR LIGHT SIGNALS
MULTI-UNIT TYPE
WITH LAMP PROVING
3-ASPECT STARTER/DISTANT

B.R.~E.R.
CHIEF S.&T. ENGINEER'S DEPT.

DRAWN BY H.C.	SWD 426
TRACED BY P.A.G.	
CHECKED BY RR	DATE 14-4-65

STANDARD WIRING DIAGRAM

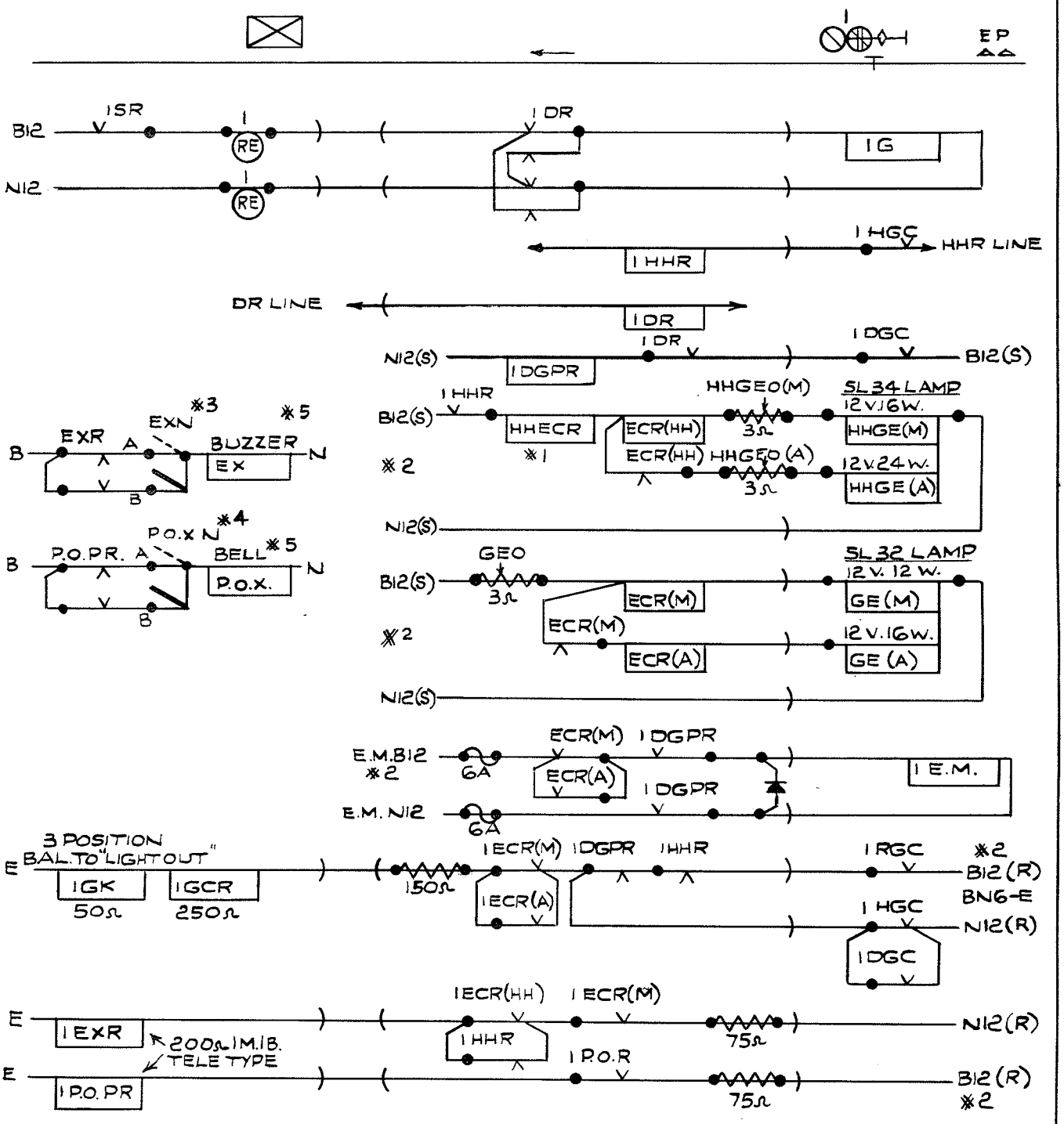

※ 1 HHECR REQUIRED ONLY FOR SIGNALS DISPLAYING A NORMAL YY ASPECT. (SEE S.W.D.429)

※ 2 POWER SUPPLY ARRANGEMENTS SHOWN ON S.W.D 429.

※ 3 EXN TO BE FIXED ABOVE GK & SWITCH POSITIONS MARKED A & B.

※ 4 POXN TO BE LABELLED "POWER SUPPLY FOR No 1 SIGNAL" & FIXED ADJACENT TO GK; SWITCH POSITIONS TO BE MARKED A&B.

※ 5 INDEPENDENT BUZZER & BELL TO BE FIXED AT REAR OF GK.

COLOUR LIGHT SIGNALS
SEARCHLIGHT TYPE
WITH LAMP PROVING
4-ASPECT SIGNAL

B.R. ~ E.R.
CHIEF S.&T. ENGINEER'S DEPT.

DRAWN BY H.C.	SWD 428
TRACED BY P.A.G.	
CHECKED BY RR	DATE 14-4-65

STANDARD WIRING DIAGRAM

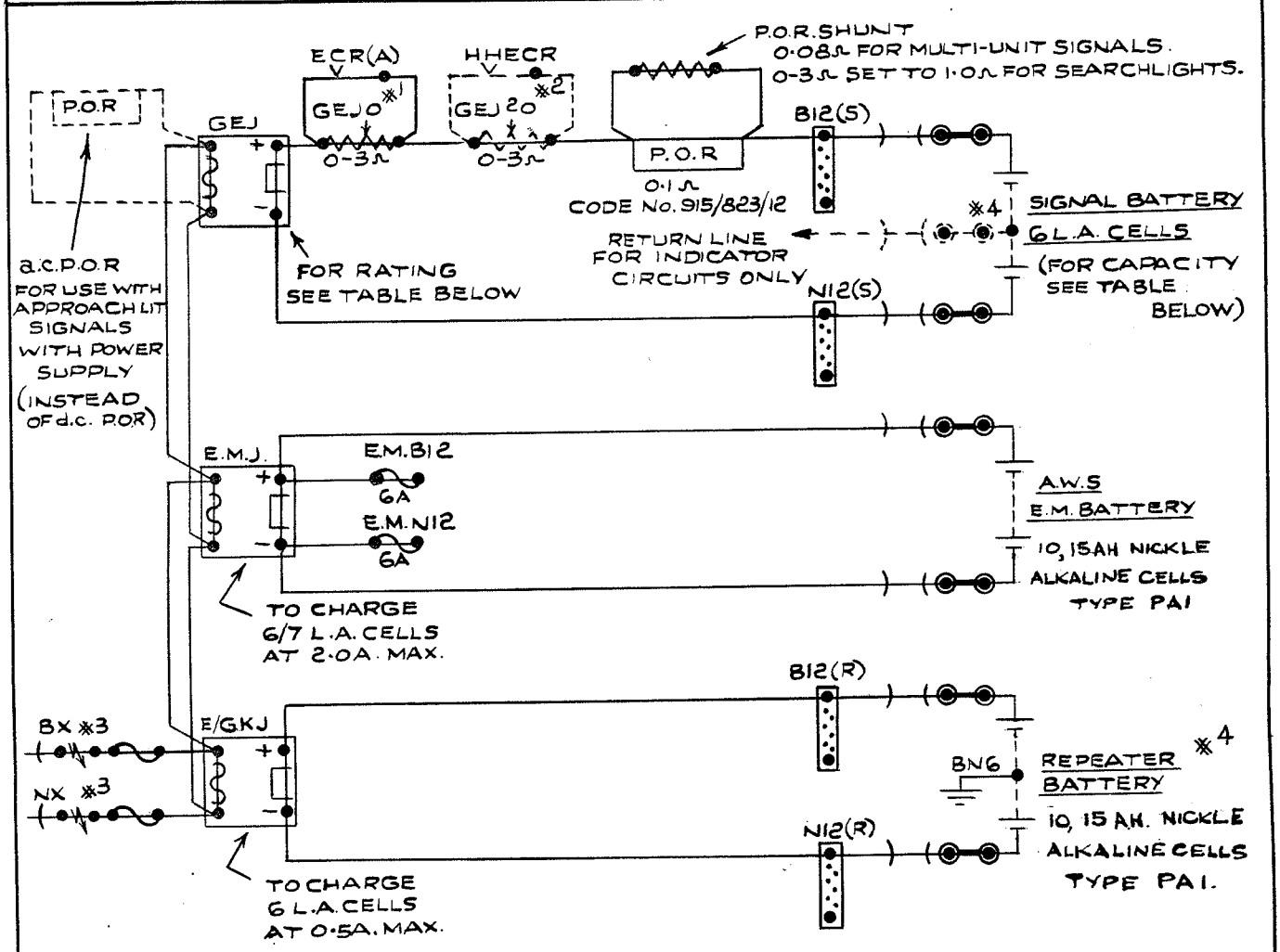

※1 GEJ0 REQUIRED FOR CONTINUOUSLY LIT MULTI-UNIT SIGNALS. RESISTOR TO BE ADJUSTED TO OBTAIN EQUAL TRICKLE CHARGING CURRENT IN BATTERY WHEN EITHER MAIN OR AUXILIARY FILAMENT IS IN USE.

※2 GEJ 20 & HHECR TO BE PROVIDED ONLY FOR 4-ASPECT SIGNALS DISPLAYING A NORMAL YY ASPECT. GEJ 20 TO BE ADJUSTED TO OBTAIN EQUAL TRICKLE CHARGING CURRENT IN BATTERY WHEN MAIN FILAMENTS OF EITHER SINGLE OR DOUBLE ASPECTS ARE IN USE.

※3 ARRESTERS FITTED WITH INSULATED COVERS (REQUIRED ONLY IF SUPPLY IS TAKEN FROM POLE ROUTE)

※4 WHERE CONTROL AND INDICATION LINES ARE ENTIRELY IN CABLE, REPEATER BATTERY TO BE OMITTED & SIGNAL BATTERY USED TO FEED INDICATOR CIRCUITS; CENTRE TAP ON SIGNAL BATTERY TO BE PROVIDED.

SIGNAL	BATTERY (20-HOUR RATE)	RECTIFIER	LAMP	LAMP TYPE
2/3-ASPECT SEARCHLIGHT	30 A.H.	2 AMP.	12V. 12/16 W	SL32
2/3-ASPECT MULTI-UNIT	60 A.H.	3 AMP.	2 OR 3 × 12V. 16/24 W	SL34
4-ASPECT SEARCHLIGHT (NORMALLY SINGLE ASPECT)	60 A.H.	3 AMP.	12V. 12/16W 12V. 16/24 W	SL32 SL34(YY)
(NORMALLY DOUBLE YELLOW)	60 A.H.	5 AMP.	12V. 12/16W 12V. 16/24 W	SL 32 SL 34(YY)
4-ASPECT MULTI-UNIT (NORMALLY SINGLE ASPECT)	60 A.H.	3 AMP.	4 × 12V. 16/24 W.	SL34
(NORMALLY DOUBLE YELLOW)	60 A.H.	5 AMP.	4 × 12V. 16/24 W	SL34

A	19-8-66	D.S.

AMENDED IN ACCORDANCE WITH STANDARD INSTRUCT IGN No 138

COLOUR LIGHT SIGNALS WITH LAMP PROVING POWER SUPPLY ARRANGEMENTS

B.R.~E.R.
CHIEF S.&T. ENGINEER'S DEPT.

DRAWN BY H.C.
TRACED BY P.A.G.
CHECKED BY RR

SWD 429 A

DATE 14.4.65

A	14.4.65	H.C.
REDRAWN. P.O.R. & SIGNAL LAMP PROVING ADDED. RR		

STANDARD WIRING DIAGRAM

2-ARM JUNCTION INDICATOR FED FROM TRICKLE CHARGED BATTERY. CONTROL CIRCUIT.

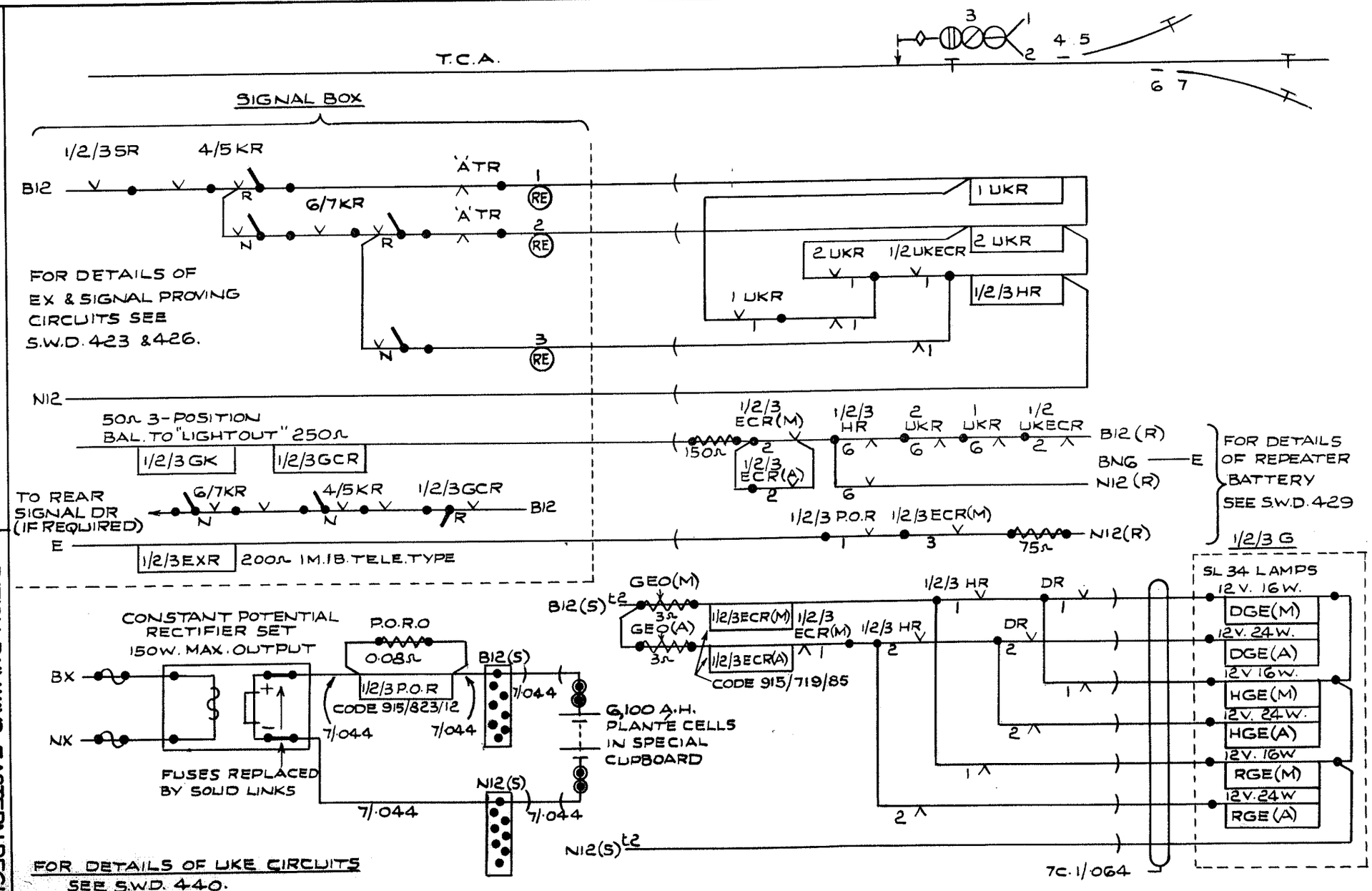

BRITISH RAILWAYS-EASTERN REGION
SIGNAL ENGINEER'S OFFICE, KINGS CROSS STATION LONDON, N.1.

DRAWN BY G.W.B.
TRACED BY R.S.T.
CHECKED BY N.M.
DATE 21. 1. 55.

SWD 439A

A	14.4.65	H.C.

B12(S)/N12(S) TERMINALS ADDED.
RR

STANDARD WIRING DIAGRAM

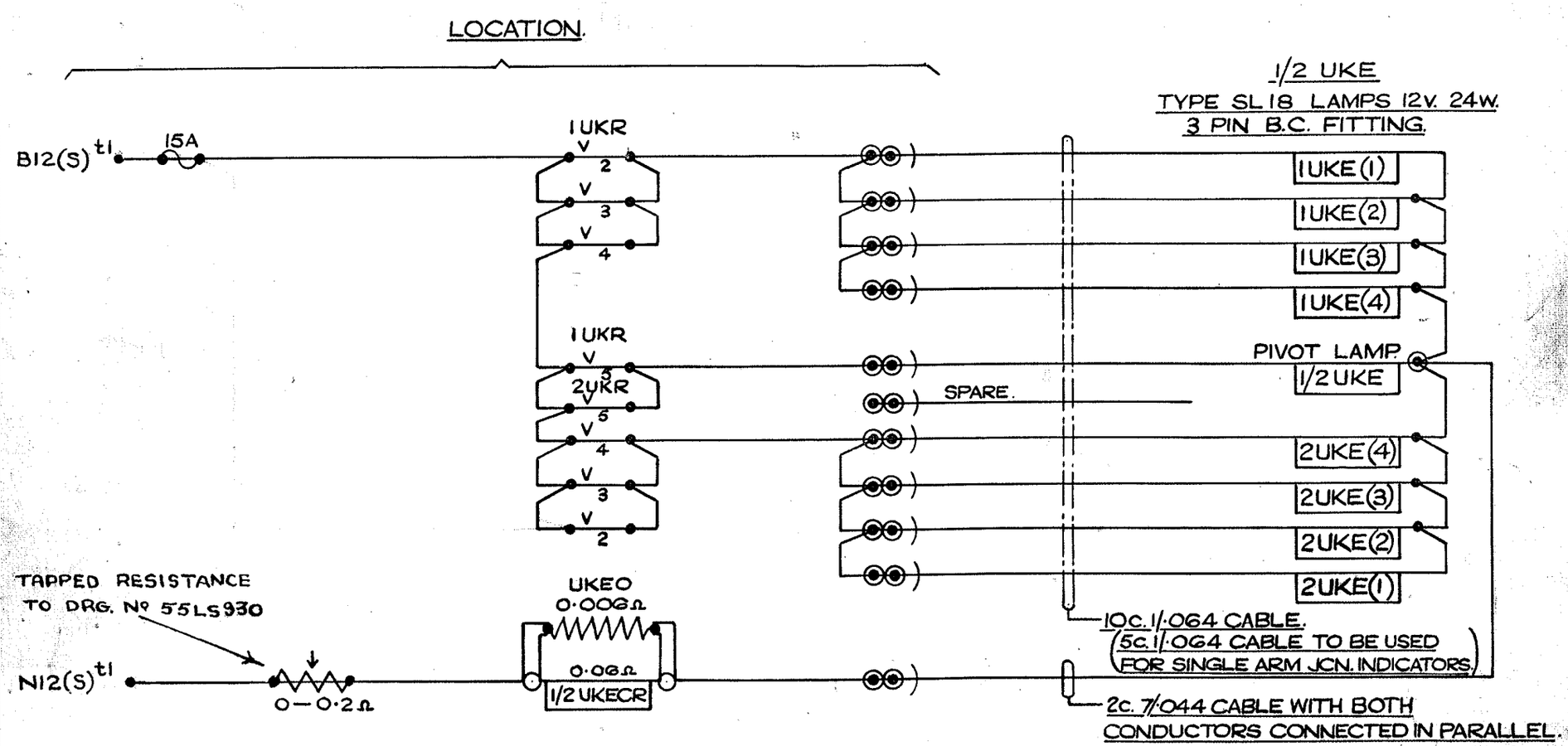

NOTES:- UKEO TO BE ATTACHED DIRECT TO TERMINALS OF 1/2 UKECR.
THE 2c. 7/·044 CONDUCTORS TO BE TERMINATED WITH LUGS.
1/·064 WIRE TO BE USED FOR LOCATION WIRING OF UKE CIRCUITS.
LOCATION TO BE KEPT WITHIN 30YDS OF JCN. INDICATOR & SPECIAL CONSIDERATION SHOULD BE GIVEN TO THE SIZE OF CONDUCTORS WHEN THIS DISTANCE IS EXCEEDED.

2 ARM JUNCTION INDICATOR FED FROM TRICKLE CHARGED BATTERY. LIGHTING CIRCUIT.

BRITISH RAILWAYS - EASTERN REGION
SIGNAL ENGINEER'S OFFICE, KINGS CROSS STATION, LONDON, N.1.

DRAWN BY G.W.B.
TRACED BY R.S.T.
CHECKED BY N.M.

SWD.440 A

DATE 21.1.55

STANDARD WIRING DIAGRAM

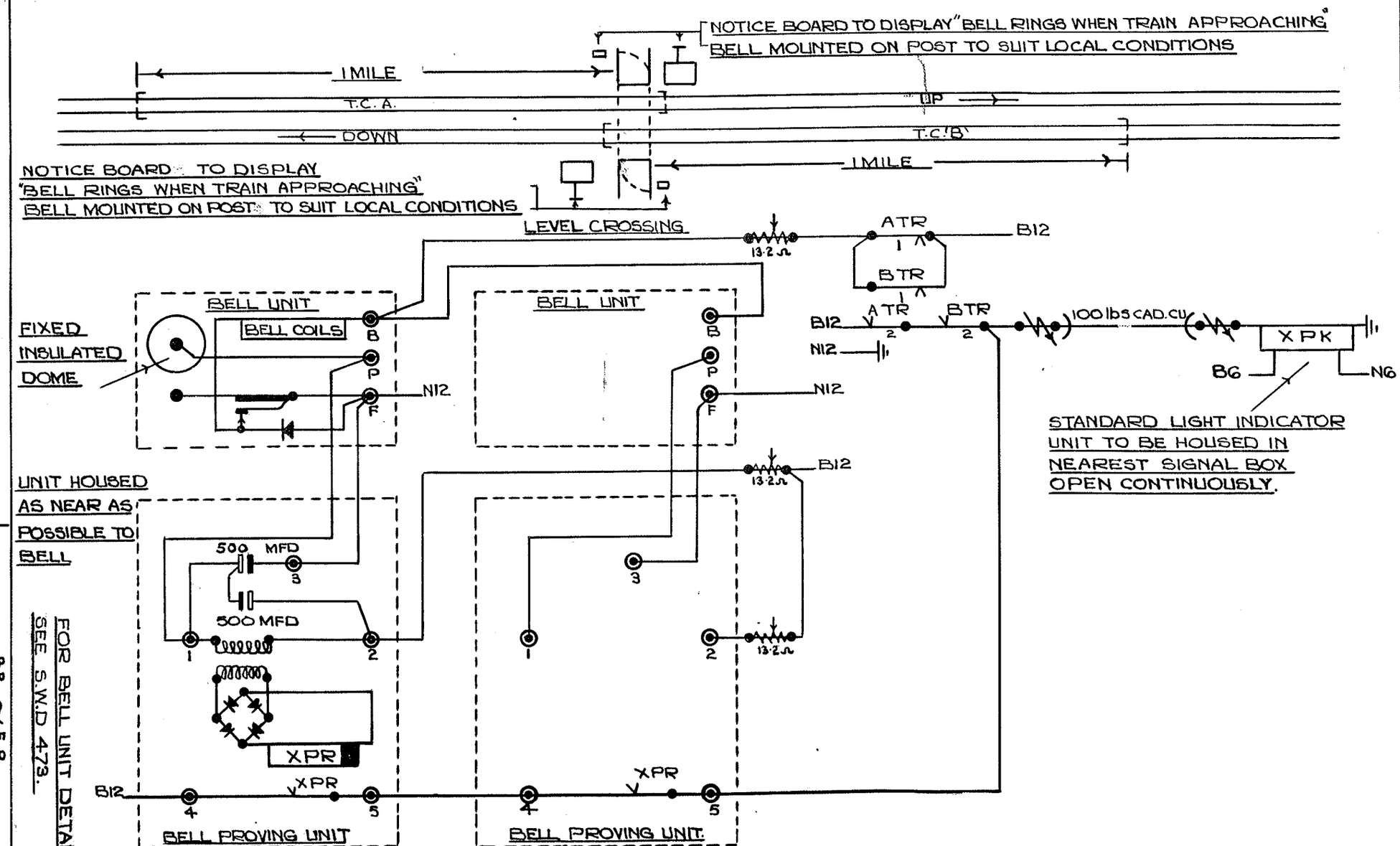

FOR BELL UNIT DETAILS
SEE S.W.D 473.

LEVEL CROSSING AUDIBLE WARNING FOR USE ON DOUBLE LINES.

B.R. ~ E.R.
SIGNAL ENGINEERS DEPT.
KINGS CROSS STATION.

DRAWN BY B.O.B.
TRACED BY
CHECKED BY
DATE: 19-8-53

SWD 451

STANDARD WIRING DIAGRAM

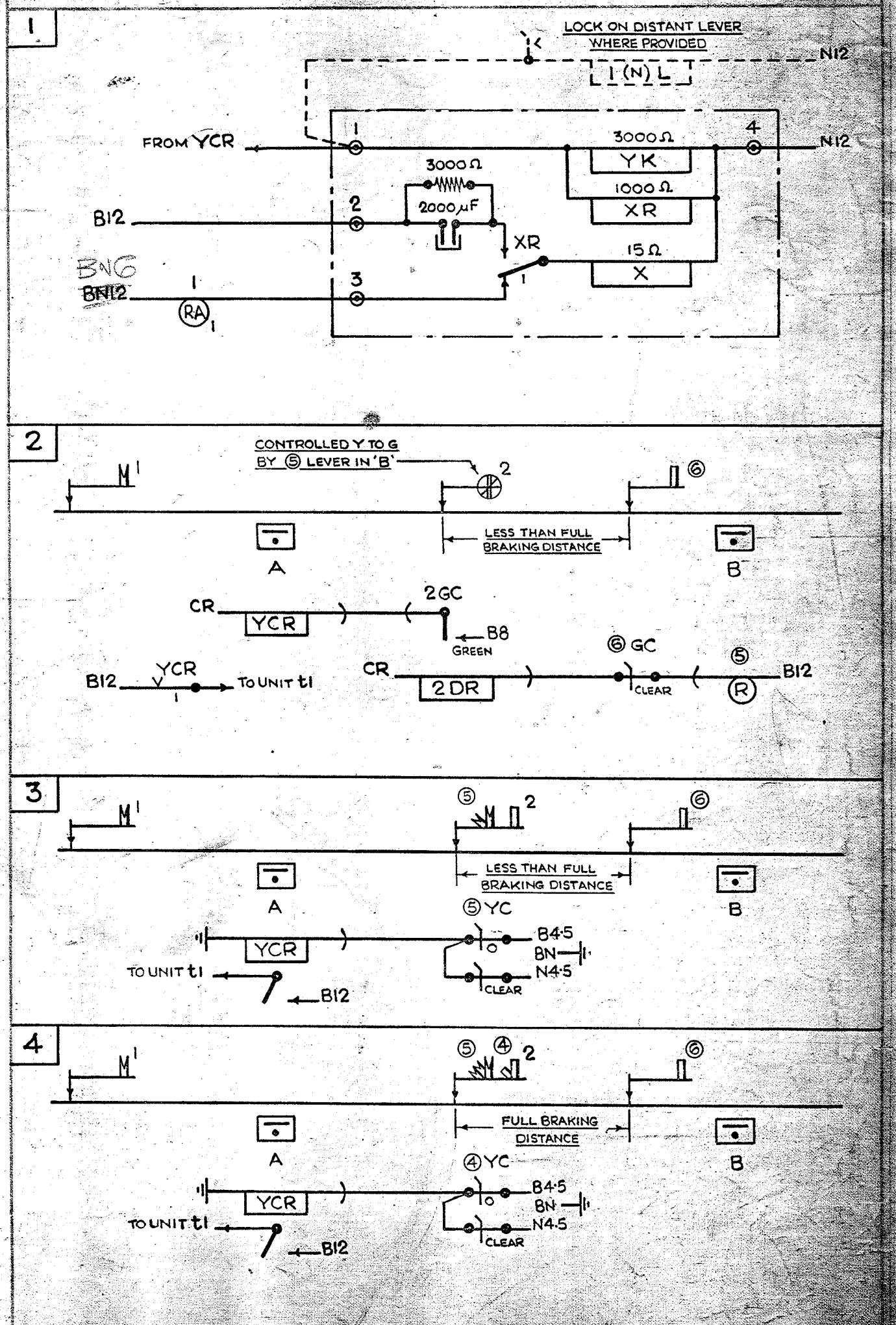

INDICATOR & AUDIBLE WARNING UNIT FOR USE WITH ELECTRICAL DISTANT INDICATOR WORKING

1. WIRING OF UNIT
2.3.4. TYPICAL APPLICATIONS

L.N.E.R. SOUTHERN AREA
SIGNAL & TELEGRAPH ENGINEER'S OFFICE
KINGS CROSS STATION N.1

DRAWN BY JKBP.
TRACED BY
CHECKED BY

SWD 471
DATE 11. 5. 45

FORMERLY SWD 57.

21 9 50 $

FORMERLY S.W.D. 59

STANDARD WIRING DIAGRAM

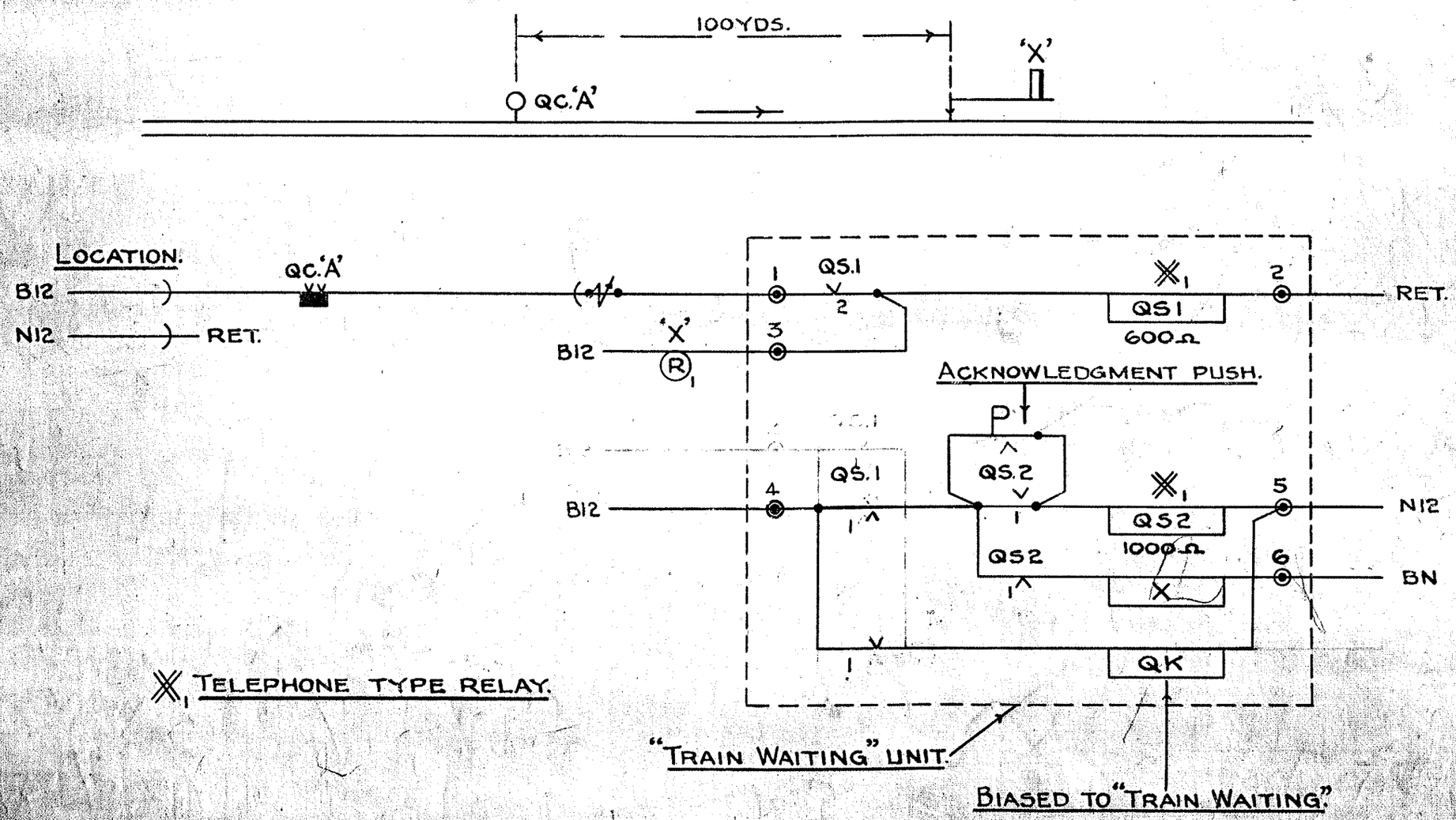

"TRAIN WAITING" UNIT.

L.N.E.R. - SOUTHERN AREA.
SIGNAL & TELEGRAPH ENGINEER'S OFFICE
KINGS CROSS STATION, N.1.

DRAWN BY S.W.S.
TRACED BY S.W.S.
CHECKED BY
DATE 22-11-44

S.W.D. 472

STANDARD WIRING DIAGRAM

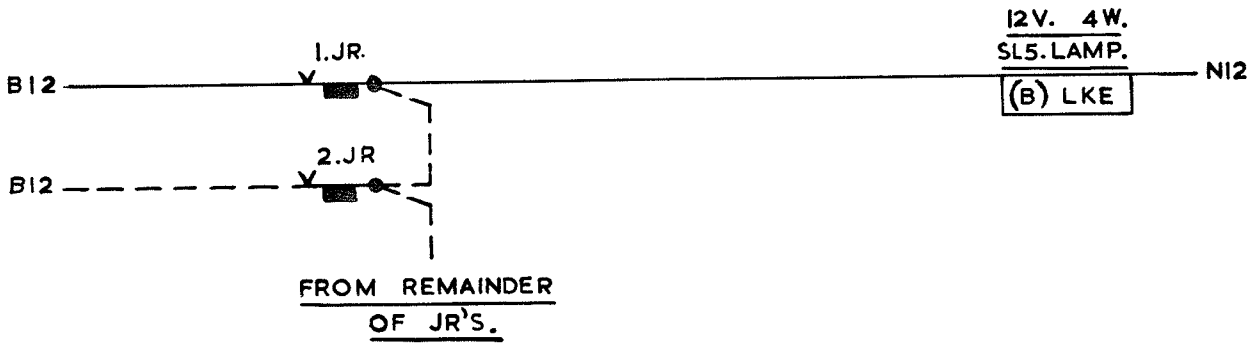

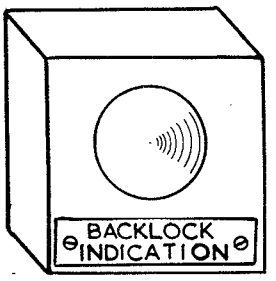

NOTES:—

1. INDICATOR TO HAVE A WHITE LIGHT, TO BE ILLUMINATED WHEN A J.R. HAS OPERATED AND EXTINGUISHED WHEN THE LEVER IS PLACED NORMAL.

2. GENERALLY A COMMON INDICATOR WILL BE PROVIDED ON THE BLOCK SHELF, BUT IN THE CASE OF A LONG FRAME ADDITIONAL INDICATORS MAY BE NECESSARY. THESE SHOULD BE LOCATED CENTRALLY BETWEEN GROUPS OF BACKLOCKED LEVERS. SEPARATE INDICATORS SHOULD BE CONTROLLED ONLY BY THE J.R'S. OF THE LEVERS WITH WHICH THEY ARE ASSOCIATED.

3. IF GROUP INDICATORS ARE PROVIDED THE LABEL SHOULD GIVE THE NUMBERS OF THE FIRST AND LAST LEVERS IN THE GROUP. E.G:— LEVERS No. 46 — 60.

BACKLOCK RELEASE INDICATOR

B.R. — E.R.
SIGNAL ENGINEERS DEPARTMENT.
KINGS CROSS STATION.

DRAWN BY. H.J.R.	SWD475.
TRACED BY. H.J.R.	
CHECKED BY. N.M.	DATE. 17—4—57.

STANDARD WIRING DIAGRAM

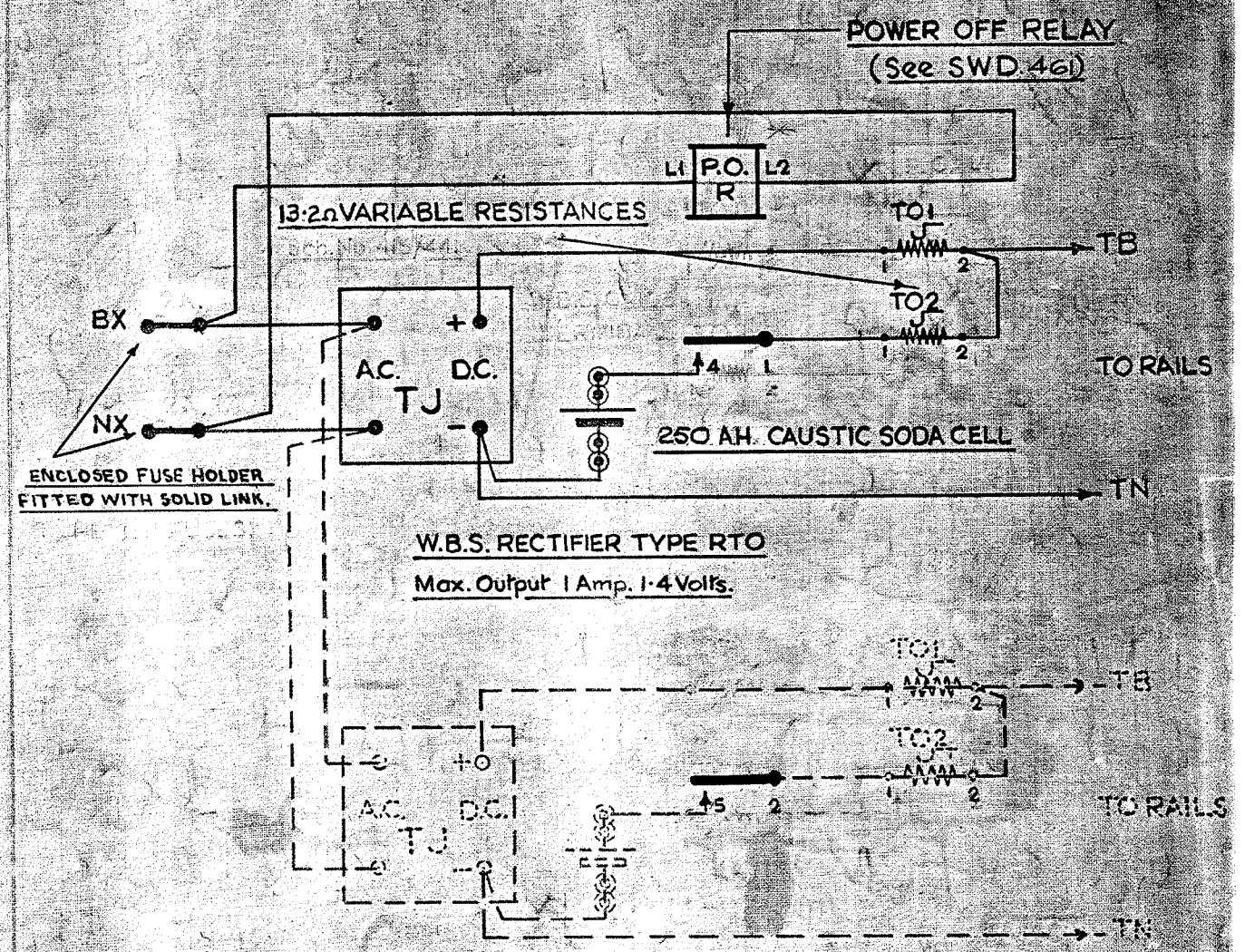

WIRING OF TRACK FEED SETS.

Where two Track Feed Sets are housed in the same Location a common Power Off Relay should be used and connected to the second Rectifier as shown dotted.

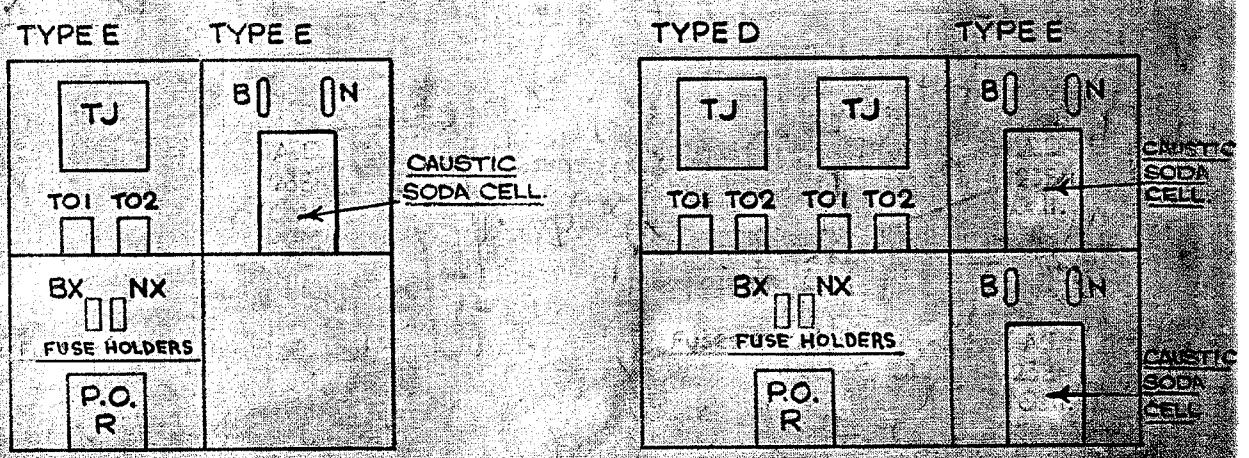

ARRANGEMENT OF APPARATUS.

RECTIFIER FED TRACK CIRCUITS.

WITH POWER OFF RELAY & PRIMARY BATTERY STANDBY.

481A

2.12.42.

2/9/52		A	30-4-52	NM
	ORIGINALLY S.W.D. 66	TYPE No. OF CELL DELETED		
	13·2Ω RESISTANCE INCLUDED			

STANDARD WIRING DIAGRAM.

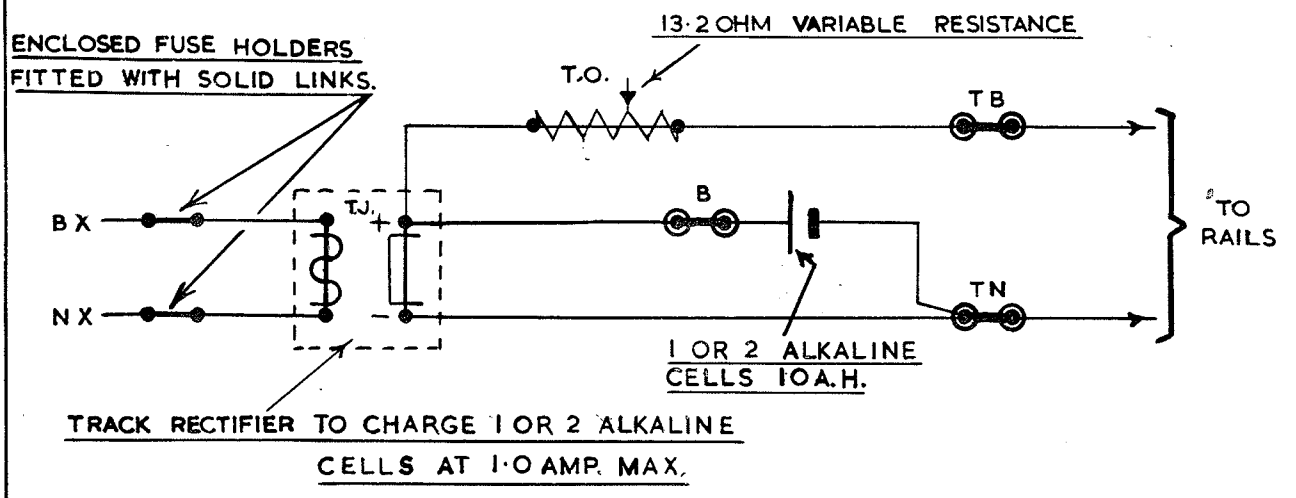

WIRING OF TRACK FEED

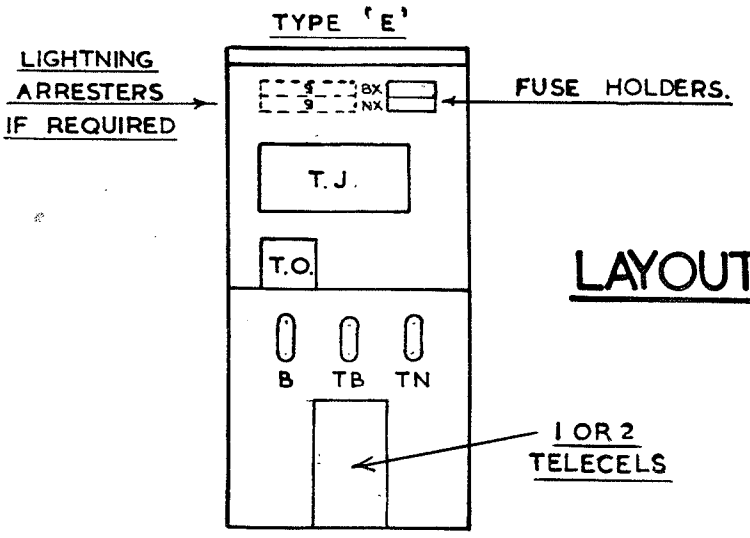

LAYOUT OF CUPBOARD

NOTES.

1. ONE ALKALINE CELL TO BE NORMALLY USED. TWO CELLS IN SERIES TO BE PROVIDED WHEN REQUIRED TO OVERCOME RAIL SURFACE CONDITIONS.

2. CHARGING RATE TO BE ADJUSTED SO THAT CELL VOLTAGE IS MAINTAINED AT 1·45.

3. STANDBY CELL – 10 A.H. TELECEL, TYPE PAO, CODE Nº. 9/54/41356.

A	5-3-65	AB
A.D 5/12 F. STANDBY REPLACED BY ALKALINE CELL		RR

RECTIFIER FED TRACK CIRCUITS. WITH ALKALINE CELL STANDBY

B.R. — E.R.

SIGNAL ENGRS. DEPT.
KINGS CROSS STATION.

DRAWN BY. J.R.S.	SWD482A
TRACED BY. J.R.S.	
CHECKED BY. N.M.	DATE. 23·9·55

STANDARD WIRING DIAGRAM.

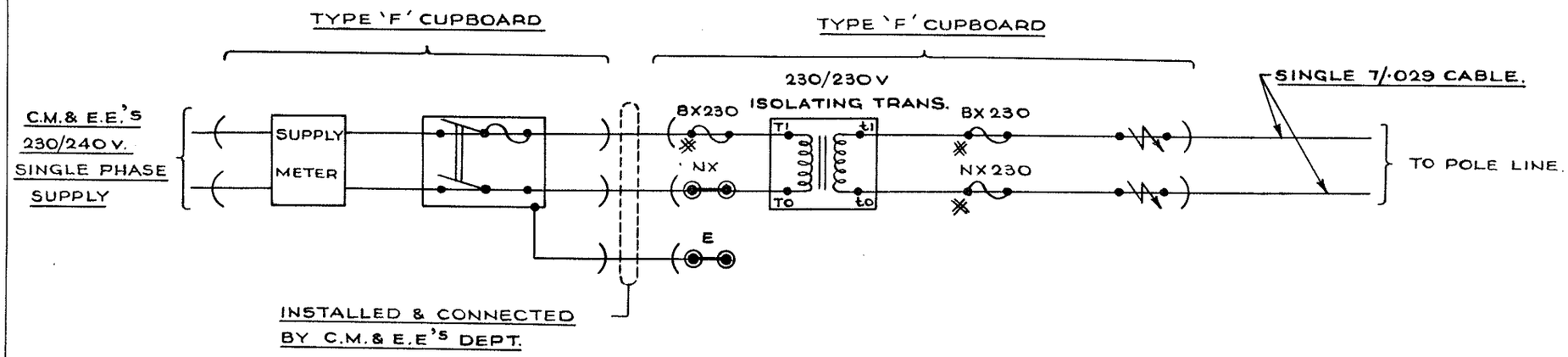

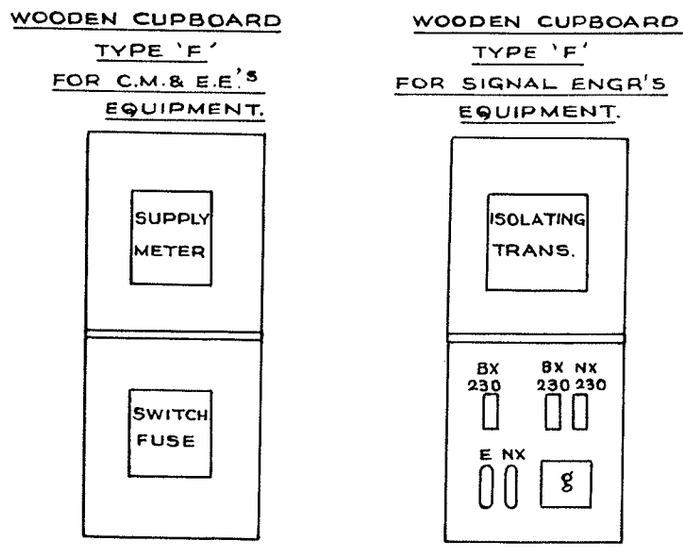

※ :- ENCLOSED H.R.C. FUSES.

FOR NOTES SEE S.W.D. 499.

POWER SUPPLIES.

CASE 'A'

POWER SUPPLY AT LINESIDE LOCATION.

B.R.-E.R.
SIGNAL ENGINEER'S DEPT.
FINSBURY SQUARE. E.C.2.

DRAWN BY: R.S.T.
TRACED BY: E.C.
CHECKED BY: A.G.B.

S.W.D.495

DATE: 17. 11. 58.

STANDARD WIRING DIAGRAM.

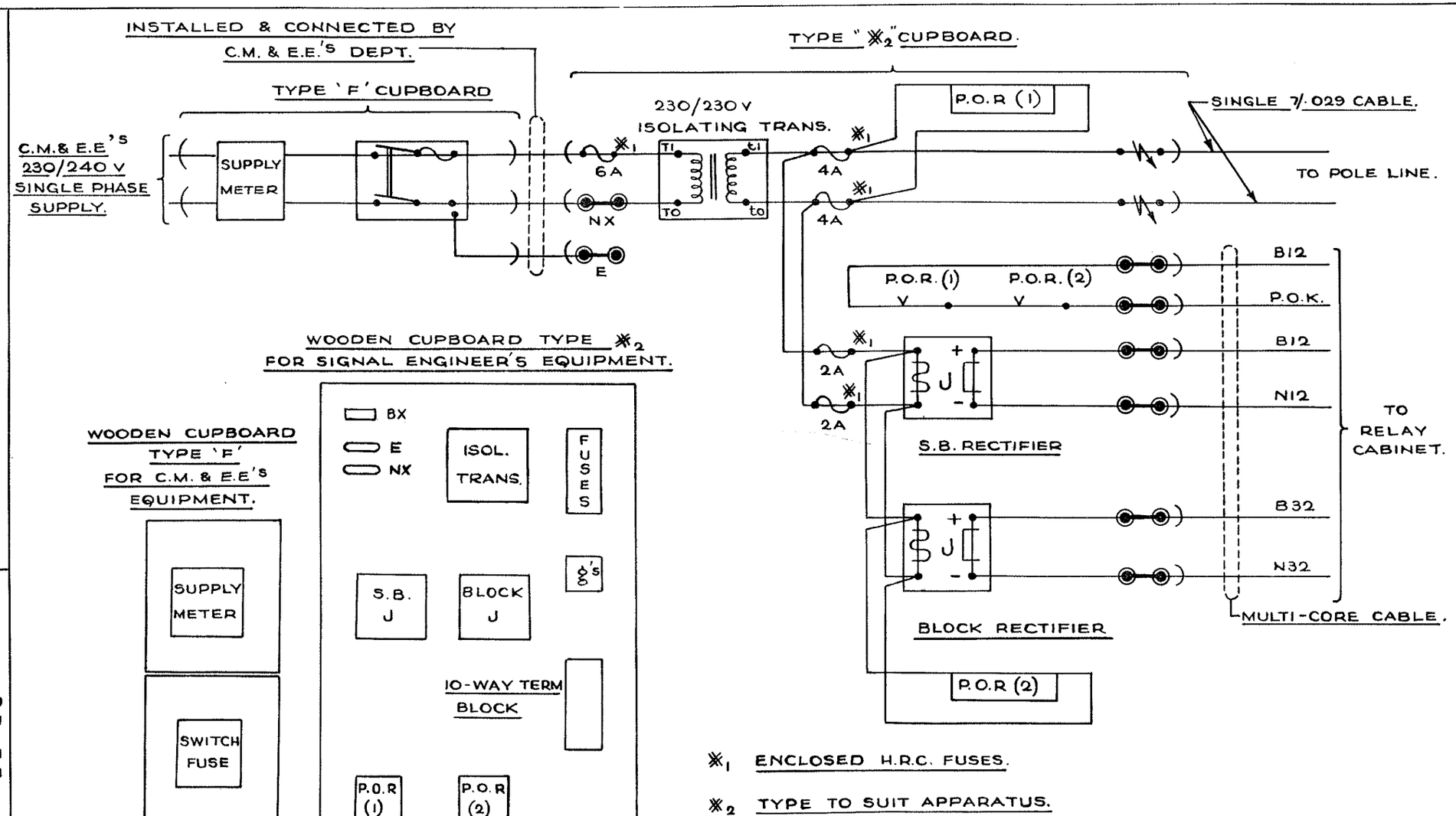

※1 ENCLOSED H.R.C. FUSES.

※2 TYPE TO SUIT APPARATUS.

FOR NOTES SEE S.W.D. 499.

POWER SUPPLIES.

CASE 'B'

POWER SUPPLY AT S.B.

WITH ISOLATING TRANSFORMER.

B.R.-E.R.

SIGNAL ENGINEER'S DEPT.

FINSBURY SQUARE, E.C.2

DRAWN BY: R.S.T.

TRACED BY: E.C.

CHECKED BY: A.G.B.

DATE: 17. 11. 58.

S.W.D.496

STANDARD WIRING DIAGRAM.

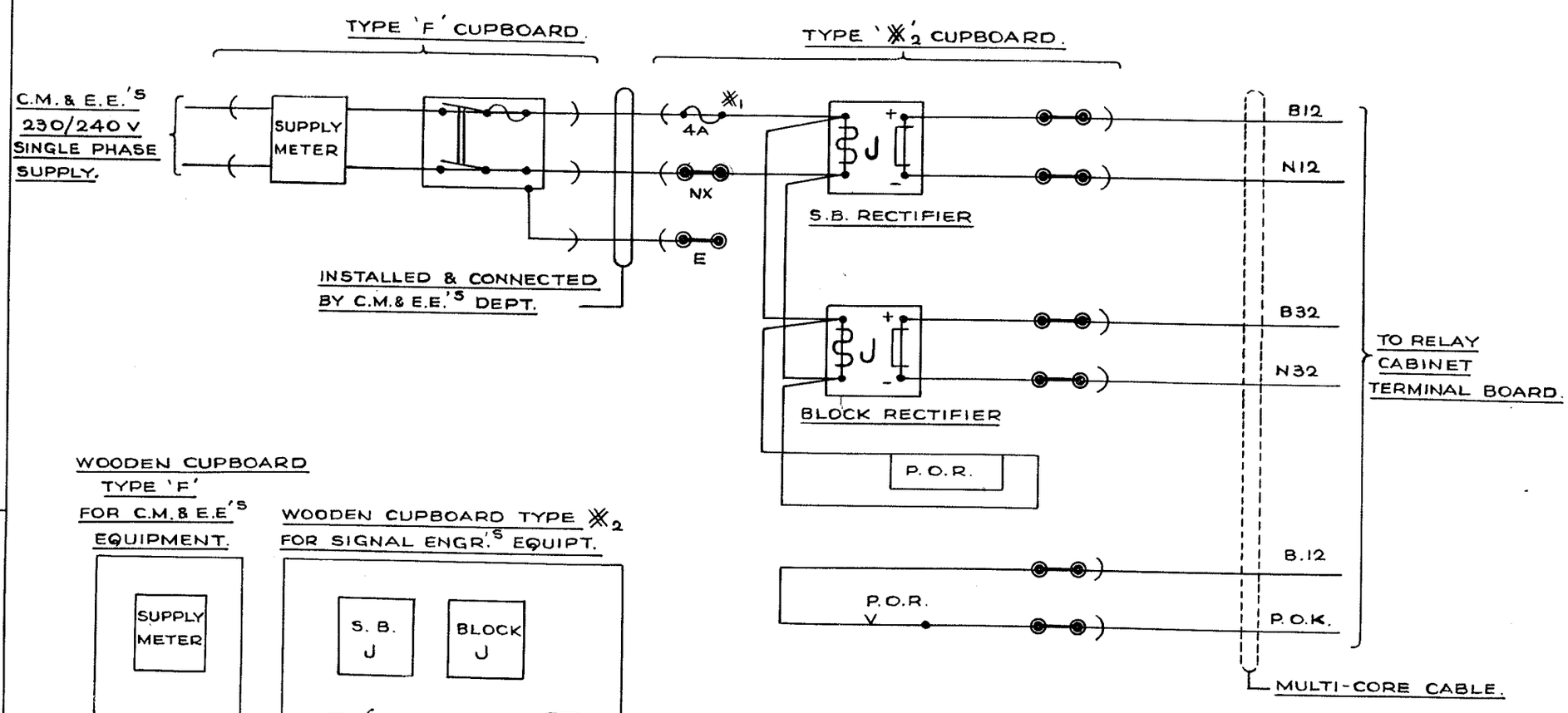

※1 ENCLOSED H.R.C. FUSES

※2 TYPE TO SUIT APPARATUS.

FOR NOTES SEE S.W.D. 499.

WOODEN CUPBOARD TYPE 'F' FOR C.M.& E.E'S EQUIPMENT.

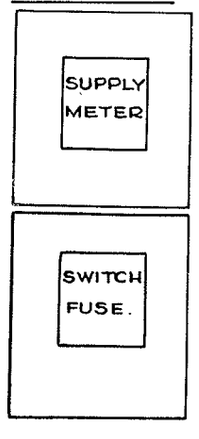

WOODEN CUPBOARD TYPE ※2 FOR SIGNAL ENGR.'S EQUIPT.

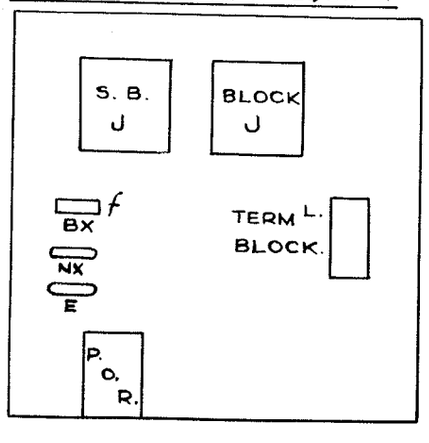

POWER SUPPLIES.

CASE "C".

POWER SUPPLY AT SIGNAL BOX WITHOUT ISOLATING TRANSFORMER.

B.R. ~ E.R.
SIGNAL ENGINEER'S DEPT.
FINSBURY SQUARE. E.C.2.

DRAWN BY: R.S.T.
TRACED BY: E.C.
CHECKED BY: A.G.B.

SWD497

DATE: 17. 11. 58.

STANDARD WIRING DIAGRAM.

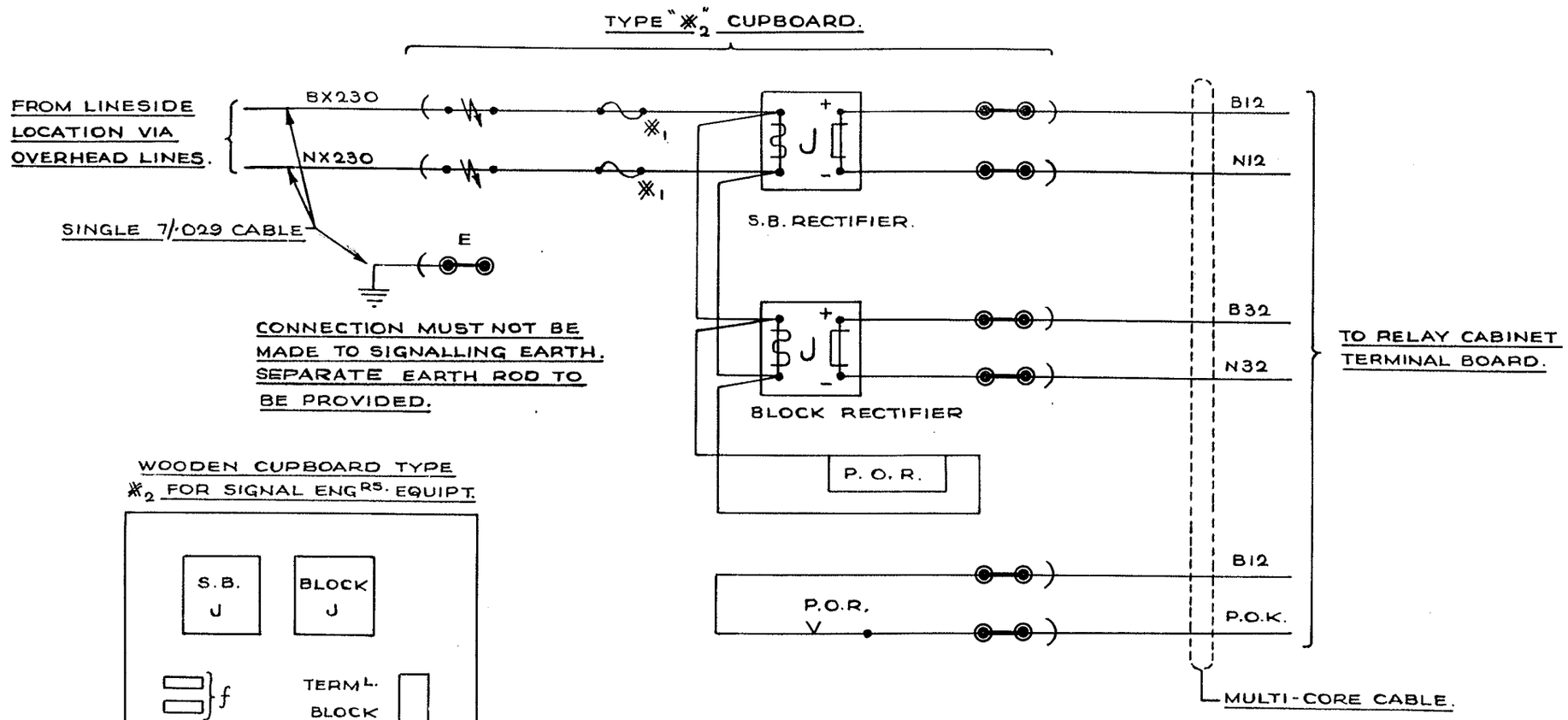

WOODEN CUPBOARD TYPE
※2 FOR SIGNAL ENGRS. EQUIPT.

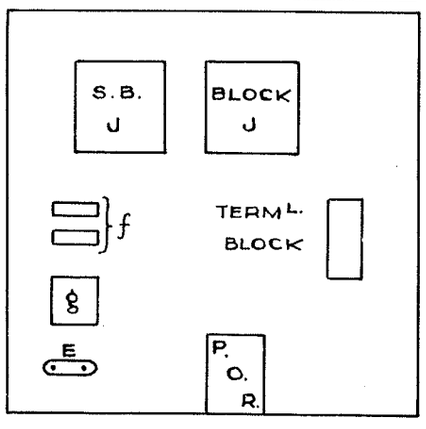

※1 ENCLOSED H.R.C. FUSES.

※2 TYPE TO SUIT APPARATUS.

FOR NOTES SEE S.W.D. 499

POWER SUPPLIES.

CASE "D"

SIGNAL BOX SUPPLY TAKEN FROM SIGNALLING MAINS ON POLE LINE.

B.R.-E.R.

SIGNAL ENGINEER'S DEPT.
FINSBURY SQUARE. E.C.2.

DRAWN BY: R.S.T.
TRACED BY: E.C.
CHECKED BY: A.G.B.
DATE: 17.11.58.

S.W.D.498

STANDARD WIRING DIAGRAM.

NOTES :-

1. WIRING OF SIGNAL ENGINEER'S CUPBOARD TO BE CARRIED OUT IN 7/·029 SINGLE CORE FLAMEPROOF CABLE.

2. ALL TERMINALS ON ISOLATING TRANSFORMER, RECTIFIER INPUT TERMINALS, AND P.O.R. CONTROL TERMINALS TO BE FITTED WITH PROTECTIVE SLEEVES AND INSULATED NUTS.

3. METAL CASING OF TRANSFORMERS AND RECTIFIERS TO BE EARTHED TO THE C.M.& E.E.'S EARTH CONNECTION.

4. LIGHTNING ARRESTERS, WHICH MUST BE OF THE GAS DISCHARGE TYPE TO BE EARTHED ON TO THE SIGNALLING EARTH AND MUST BE FITTED WITH OVERALL PROTECTIVE COVERS AND INSULATED NUTS.

5. FUSE VALUES SHEWN IN CASE 'B' ARE TO ILLUSTRATE GRADING PRINCIPLE, BUT IN PRACTICE WILL BE DETERMINED BY THE ACTUAL LOAD.

POWER SUPPLIES.

NOTES APPLICABLE TO S.W.D'S 495 TO 498.

B.R. - E.R.
SIGNAL ENGINEER'S DEPT.
FINSBURY SQUARE E.C.2.

DRAWN BY: R.S.T.	S.W.D.499
TRACED BY: E.C.	
CHECKED BY: A.G.B.	DATE: 17. 11. 58

S/9/2

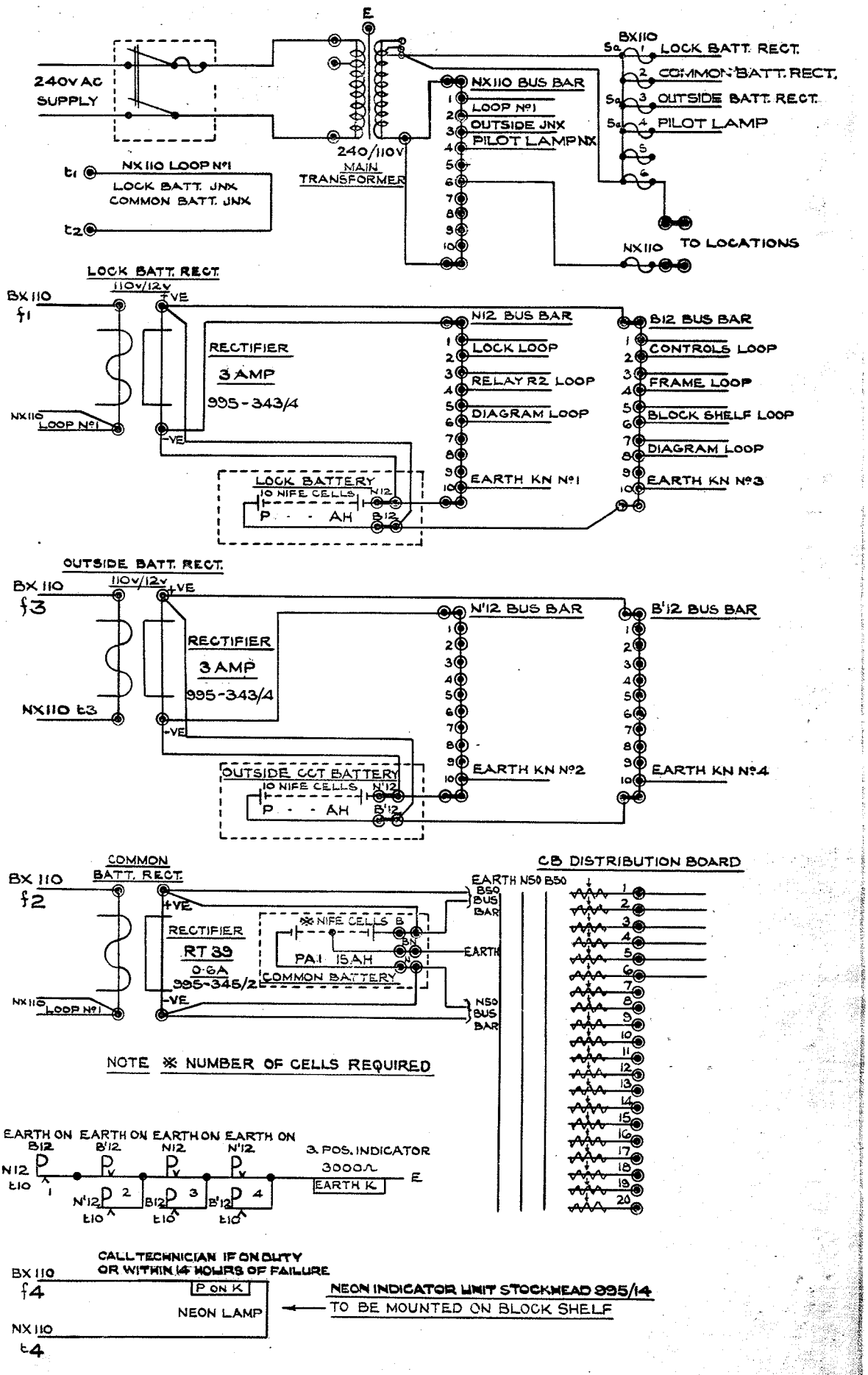

NOTE ※ NUMBER OF CELLS REQUIRED

CELL TYPES			
PA1	15AH	STOCKHEAD Nº 991/5/15	TYPE A - MORE THAN 10 INDICATIONS
PV3	30AH	" - 991/5/35	TYPE B - 10 OR LESS INDICATIONS
PV5	45AH	" - 991/5/45	WIRING TO BE 1/·044 CABLE

DRAWN BY	J.E.P	CORR. REF.	ST. 4250	BRITISH RAILWAYS. N.E. REGION
CHECKED BY	W.H.E	AUTHORITY.	—	STANDARD DRAWING OF POWER SUPPLY CIRCUITS TYPE "B"
		DATE.	9 : 9 : 59	59 - YS - 31

A.F. WIGRAM

SIGNAL ENGINEER

A	ALTERATION FOR RE-ISSUE UNDER REGIONAL MERGER
DRAWN	DTP/JWB
TRACED	BS
CHECKED	
APPROVED	
DATE	3.4.64
CORR. REF	ST 4250
AUTHORITY	
A. F. WIGRAM.	
CHIEF SIGNAL AND TELECOMMUNICATIONS ENG'R	

BRITISH RAILWAYS

E. REGION.

SEMAPHORE SIGNALS

TYPICAL ELECTRIC LIGHTING CIRCUITS

64-YS-420

A

1. LAMP SUPPLY CIRCUIT

ECR. 2Ω RELAY 995/152/4
MAY BE OMITTED WHERE LAMP PROVING IS NOT REQUIRED

SIGNAL LAMP. TYPE ADLAKE 1202. CODE 995/48/1

LAMP 4 VOLT 0·5 WATT S.B.C. CODE 9/54/38498

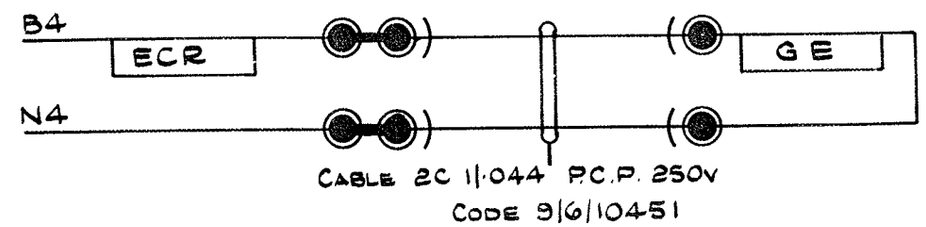

2. LAMP PROVING

ARRANGEMENT TO BE USED WITH 1000Ω E.K. UNIT.

A BATTERY 6 - AD52 CELLS
CODE 415/722/2

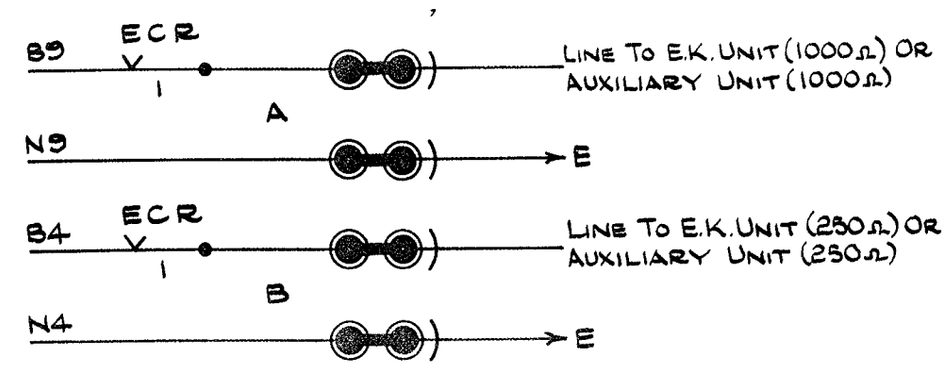

B ARRANGEMENT TO BE USED WITH 250 Ω E.K. UNIT.
BATTERY SEE LAMP POWER SUPPLY

3. LAMP POWER SUPPLY

A WHERE NO MAINS SUPPLY IS AVAILABLE
3- AD618A CELLS SERIES CONNECTED - CODE 9/54/8150
WHERE MORE THAN 3 LAMPS ARE FED FROM ONE BATTERY, 2 BANKS OF CELLS IN PARALLEL WILL BE USED.

B WHERE MAINS SUPPLY IS AVAILABLE

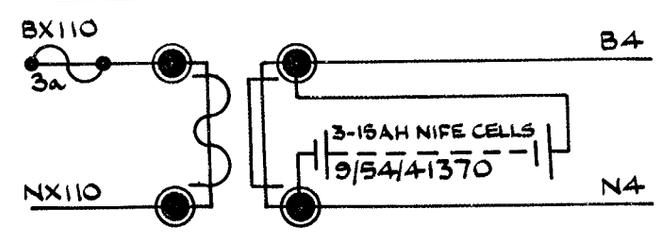

TRANSFORMER / RECTIFIER UNIT FOR SEMAPHORE SIGNAL LIGHTING - CODE 995/341/2

S/11/1

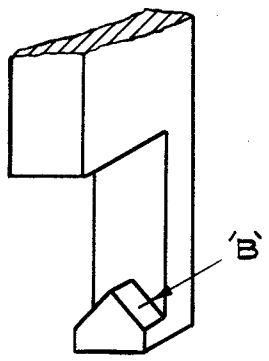

BOTTOM END OF
FORCED DROP LOCK

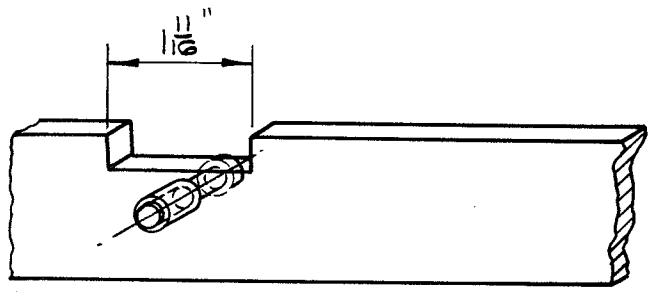

GROOVE & PIN
IN PLUNGER
(PIN IS IN CENTRE OF GROOVE)

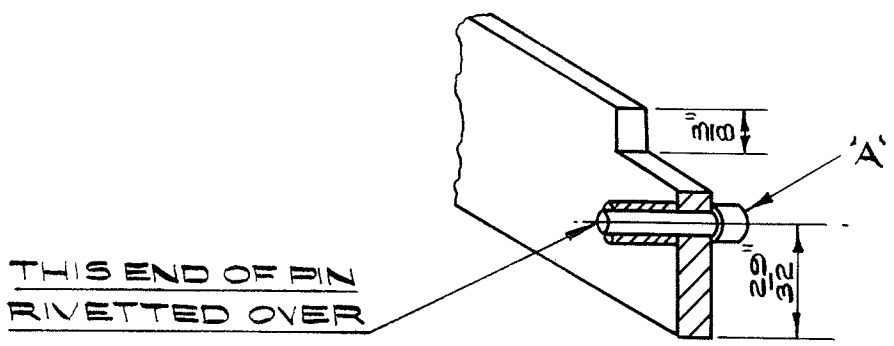

SECTION THROUGH PLUNGER
SHOWING ASSEMBLY OF STUD

IF LOCK SHOULD STICK UP, SHORT END (A) OF STUD WILL BEAR ON TAPER FACE 'B' ON LOCK, FORCING IT DOWN.

DRAWN BY	R. M.	CORR. REF.		BRITISH RAILWAYS. N.E. REGION.
TRACED BY	D.C.S.	AUTHORITY		
CHECKED BY	NEP	DATE	10.7.63	LEVER LOCK, ELECTRIC, OPERATION OF FORCED DOWN FEATURE
A. F. WIGRAM CHIEF S & T ENGINEER.				63-YS-577.

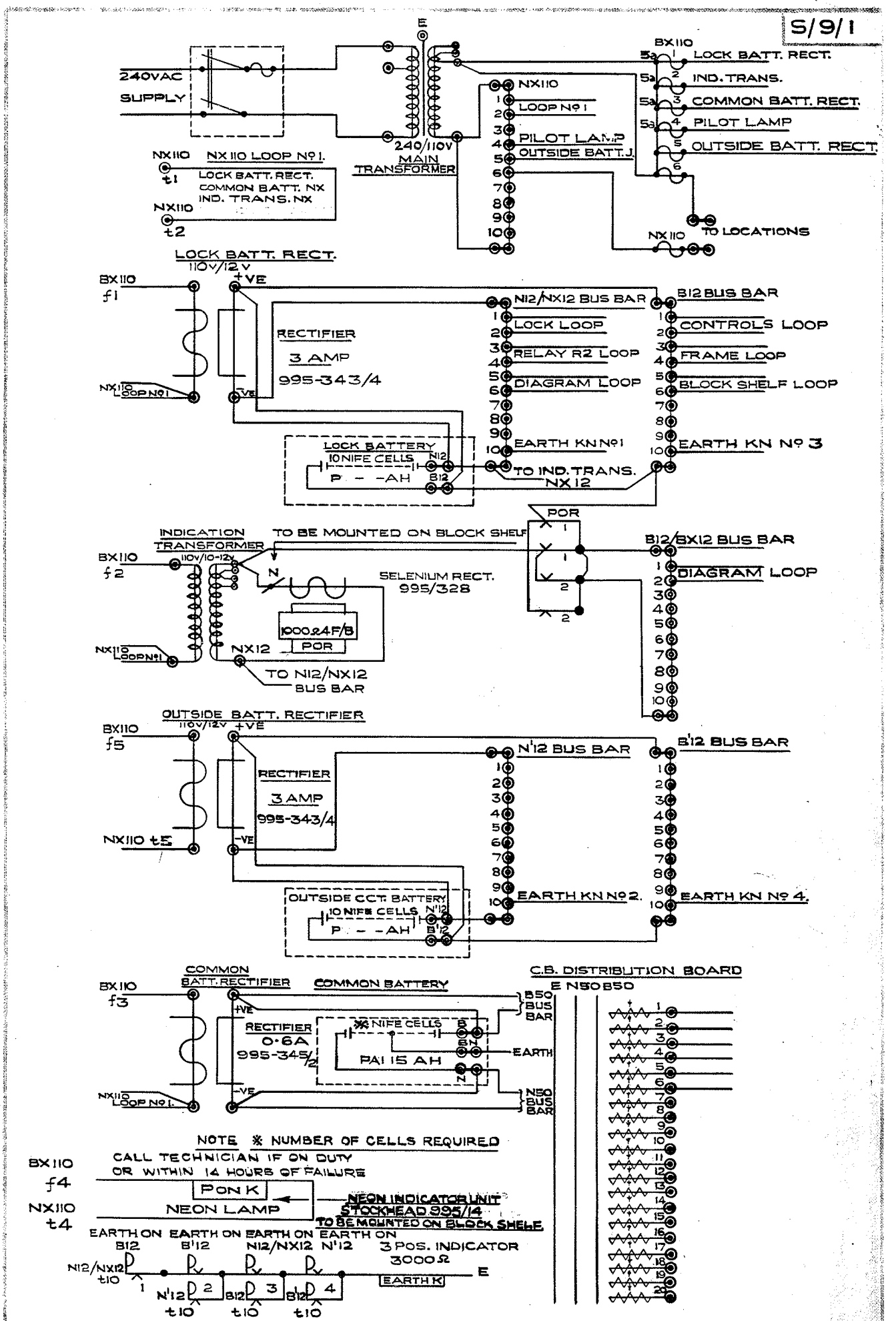

CELL TYPES			
PAI 15AH	STOCKHEAD Nº 991/5/15		TYPE A – MORE THAN 10 INDICATIONS
PV330AH	" " 991/5/35		TYPE B – 10 OR LESS INDICATIONS
PV5 45AH	" " 991/5/45		WIRING TO BE 1/·044 CABLE

DRAWN BY	D.T.P. A.F.S.	CORR REF.	ST. 4250
CHECKED BY	J.A.T.A	AUTHORITY	
		DATE.	

A.F. WIGRAM

CHIEF S. & T. ENGINEER

BRITISH RAILWAYS. N.E. REGION.

STANDARD DRAWING OF POWER SUPPLY CIRCUITS TYPE "A"

61 – YS – 602

224/33