STANDARD WIRING SYMBOLS, TYPICAL CIRCUITS & GENERAL CIRCUIT DETAILS.

$8\frac{1}{2}'' \times 4''$

E99

INDEX.

GENERAL NOTES ..... 2.
ABBREVIATIONS OF DESCRIPTIONS OF APPARATUS ..... 3.
SYMBOLS PECULIAR TO TRACK CIRCUIT PLANS ..... 4.
WIRING SYMBOLS ..... 5.6.7.
LEVER CONTACTS ..... 8.
TRR & PDRR WIRING 9
ELECTRICAL DETECTION ..... 10. 10A 10B 10C 10D 11.
GROUND FRAME/S RELEASES 12. 12A 13. 13A
LEATHERHEAD SCHEME ..... 14.
BACK LOCKS. TREADLE WITH SYKES INSTRUMENT 15. 15A
TREADLE WITH STICK RELAY ..... 16.
TRAIN WAITING TREADLE 17. 17A 17B 17C 17D
TRAIN WAITING TREADLES AT JUNCTION ..... 18.
ONE OR TWO TRACK CIRCUITS 19. 19A 19B
TWO TRACK CIRCUITS OCCUPIED AT JUNCTION 20
BANNER SIGNALS 21 22 23 24 24A
ARM REPEATERS 25 26 26A
ELECTRICAL FOULING BAR CIRCUIT ..... 27.
ARM PROVING CIRCUIT 28
STANDARD CIRCUIT FOR INTERMITTENT TRACK ..... 29 30.
ELECTRICALLY OPERATED DISTANT SIGNALS ..... 31 32.
TYPICAL TRACK PLAN (E 499F)
AUDIBLE WARNING OF TRAIN LEAVING TRACK CIRCUIT 33
APPARATUS RESISTANCES & OPERATING VALUES FOR BATTERY OPERATION 34
INTERMEDIATE BLOCK SIGNAL TRAIN-RUNNING-AWAY INDICATION 35
GUIDING PRINCIPLES FOR A.C. TRACK CIRCUITS IN ELECTRIFIED AREAS 36
AWS-BR SYSTEM 37A 37B 37C 37D 37E

WIRING DIAGRAMS.

GENERAL NOTES.

1. WHENEVER POSSIBLE, IN THE DESIGN OF CIRCUITS, THE FEED (BX. OR BH.) SHOULD BE ON THE LEFT AND THE NX. OR NH. ON THE RIGHT. THIS SHOULD BE OBSERVED PARTICULARLY IN THE CASE OF WIRING TO LEVER CONTACTS.
2. IN ORDER THAT ALL WIRING DIAGRAMS BE AS UNIFORM AS POSSIBLE, ALL WIRING SYMBOLS SHOULD BE MADE TO A STANDARD SIZE APPROXIMATELY 1/4". i.e. RELAY TONGUES TO BE ABOUT 1/4" LONG; LEVER CONTACTS TO BE APPROXIMATELY 1/4" DIAMETER.
3. WIRES SHOWN TO CROSS ONE ANOTHER BUT NOT CONNECTED ELECTRICALLY TO BE SHOWN THUS:-
4. ALL LINE WIRES ENTERING OR LEAVING SIGNAL BOXES TO BE FUSED, AND THE CAPACITY OF THE FUSE TO BE STATED. THE ONLY EXCEPTION BEING THAT FUSES ARE NOT TO BE PROVIDED IN CIRCUITS IN WHICH CROSS-PROTECTION EXISTS IN THE SIGNAL BOX, TUBE CONNECTORS TO BE SHOWN INSTEAD.
5. RETURN WIRES FROM APPARATUS OUTSIDE THE SIGNAL BOX ALWAYS TO BE SHOWN.
6. NOT MORE THAN TWO WIRES SHOULD BE TERMINATED ON ANY TERMINAL; ALTHOUGH AT TIMES THIS MAY MEAN RUNNING A WIRE WHICH WILL BE LONGER THAN WOULD OTHERWISE BE NECESSARY.
7. INTERNAL CIRCUITS ON A CENTRAL BATTERY TO BE FUSED.
8. KEY RELEASES WILL NOT BE PROVIDED FOR CIRCUITS ON SHEETS 16. 17. 17A 17C 18. 19. 19A 19B 20. WHERE THE SIGNAL BOX HAS A LINEMAN IN CONTINUOUS ATTENDANCE.
9. THE BH. FEED FOR KEY RELEASE TO BE TAKEN THROUGH A SEPARATE FUSE, ONE FUSE FOR EACH TYPE OF APPARATUS, i.e. SYKES, 1000Ω RELAYS, COIL-LOCKS, ETC.

ABBREVIATIONS OF DESCRIPTIONS OF APPARATUS.

BX. FEED OF AN A.C. SUPPLY.

NX. RETURN OF AN A.C. SUPPLY.

BH. FEED OF A D.C. SUPPLY.

NH. RETURN OF A D.C. SUPPLY.

VOLTAGE TO BE INDICATED BY A NUMBER THUS:- BX.110. NH.10.

A.R. ARM RELAY. WORKING IN REPEATER CIRCUIT.

A.R.R. ARM RELAY REPEATER.
IF TWO NEUTRAL RELAYS ARE OPERATED FROM AN A.R. DESCRIBE AS FOLLOWS:-
A.R.R. 6"ON." A.R.R. 6"OFF."

BLR. BACKLOCK RELAY.

L.P.R. LAMP PROVING RELAY.
IF NECESSARY ADD WHICH ASPECT AS WELL AS SIGNAL NUMBER. eg L.P.R 6. RED.

P.D.R. POINT DETECTOR RELAY.

P.D.R.R. POINT DETECTOR RELAY REPEATER.

T.R. TRACK RELAY. (ON GROUND OR IN SIGNAL BOX)

T.R.R. TRACK RELAY REPEATER. (IN SIGNAL BOX)

T.R.R.^{A} TRACK RELAY REPEATER.
1ST REPEATER OF T.R. OR T.R.R. IN SIGNAL BOX.

T.E.R. TIME ELEMENT RELAY.

H.R. HOME RELAY.

I.R. INNER RELAY.

O.R. OUTER RELAY.

S.S. SIGNAL STICK RELAY.

S.S.T.L. SAFETY SWITCH TRACK LOCK RELAY.

L.R. LOCK RELAY.

LG.R. LOCKING RELAY.

B.R.R. BLOCK REPEATER RELAY.

BR BUZZER RELAY

E99-3

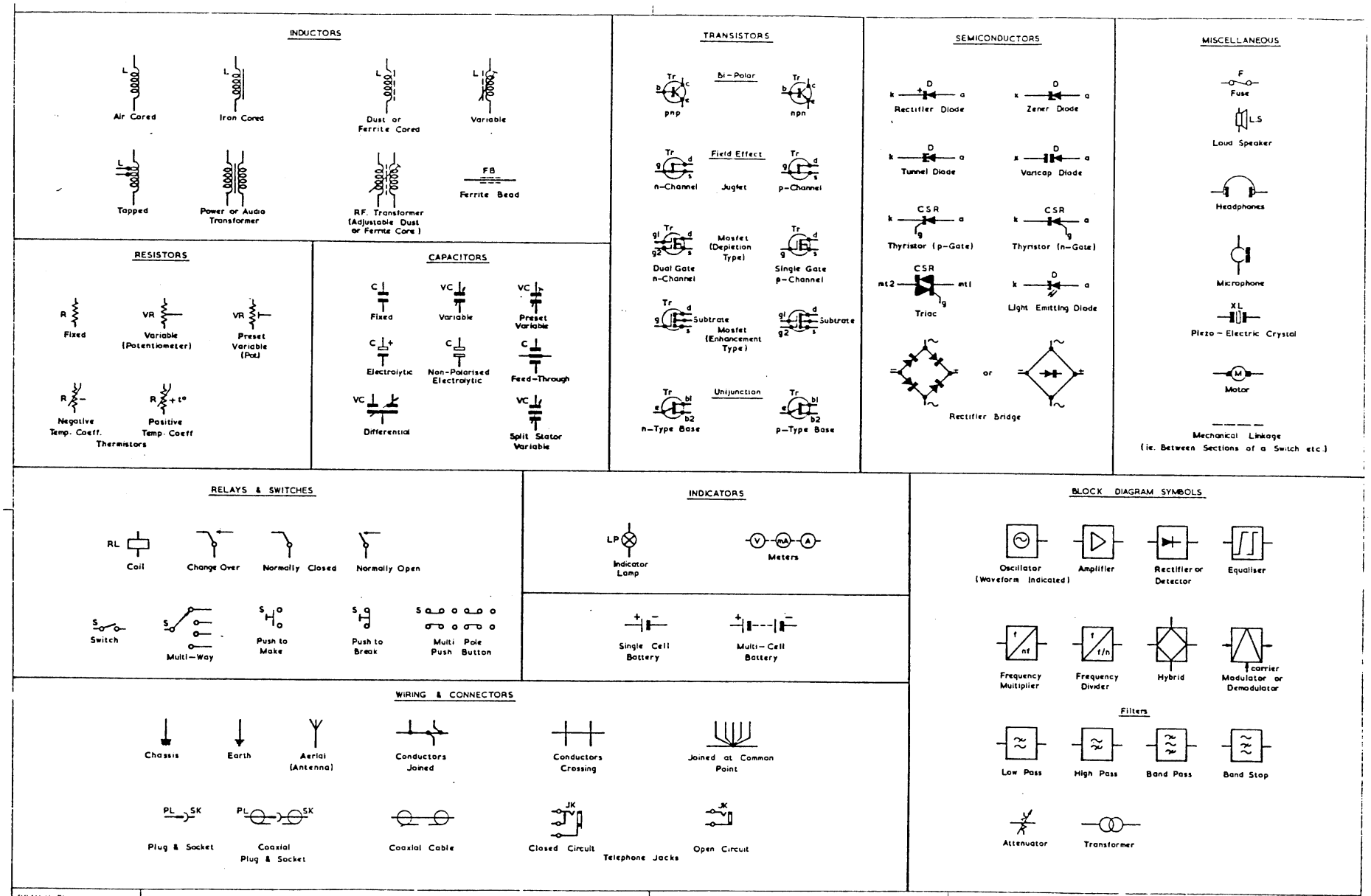
INDUCTORS
Air Cored
Iron Cored
Dust or Ferrite Cored
Variable
Tapped
Power or Audio Transformer
R.F. Transformer (Adjustable Dust or Ferrite Core)
FB
Ferrite Bead
RESISTORS
Fixed
Variable (Potentiometer)
Preset Variable (Pot)
Negative Temp. Coeff.
Positive Temp. Coeff
Thermistors
CAPACITORS
Fixed
Variable
Preset Variable
Electrolytic
Non-Polarised Electrolytic
Feed-Through
Differential
Split Stator Variable
TRANSISTORS
Bi-Polar
pnp
npn
Field Effect
n-Channel
Juglet
p-Channel
Mosfet (Depletion Type)
Dual Gate n-Channel
Single Gate p-Channel
Subtrate
Mosfet (Enhancement Type)
Unijunction
n-Type Base
p-Type Base
SEMICONDUCTORS
Rectifier Diode
Zener Diode
Tunnel Diode
Varicap Diode
Thyristor (p-Gate)
Thyristor (n-Gate)
Triac
Light Emitting Diode
Rectifier Bridge
or
MISCELLANEOUS
Fuse
Loud Speaker
Headphones
Microphone
Piezo-Electric Crystal
Motor
Mechanical Linkage (ie. Between Sections of a Switch etc.)
RELAYS & SWITCHES
Coil
Change Over
Normally Closed
Normally Open
Switch
Multi-Way
Push to Make
Push to Break
Multi Pole Push Button
INDICATORS
Indicator Lamp
Meters
Single Cell Battery
Multi-Cell Battery
BLOCK DIAGRAM SYMBOLS
Oscillator (Waveform Indicated)
Amplifier
Rectifier or Detector
Equaliser
Frequency Multiplier
Frequency Divider
Hybrid
Modulator or Demodulator
Filters
Low Pass
High Pass
Band Pass
Band Stop
Attenuator
Transformer
WIRING & CONNECTORS
Chassis
Earth
Aerial (Antenna)
Conductors Joined
Conductors Crossing
Joined at Common Point
Plug & Socket
Coaxial Plug & Socket
Coaxial Cable
Closed Circuit
Open Circuit
Telephone Jacks
DRAWN BY
TRACED BY JHR.
CHECKED BY
British Rail
ELECTRICAL CIRCUIT SYMBOLS.
E99-3A

SYMBOLS PECULIAR TO TRACK CIRCUIT PLANS.

F. TRACK FEED.

R. TRACK RELAY. SITUATED ALONGSIDE THE TRACK.

(R) TRACK RELAY IN SIGNAL BOX.

} TO BE SHOWN AT THE APPROPRIATE END OF THE TRACK CIRCUIT. SEE TYPICAL TRACK PLAN (FARLEY DOWN) SHEET No. E.499F-

C. CONDENSER (RES. BOND)

R.C. TRACK RELAY CONDENSER.

J.B. CABLE JOINT BOX.

T.B. TEST BOX.

T. TRANSFORMER. STATE CAPACITY IF OTHER THAN 1 KVA.

C.R. CONTACTOR RELAY.

IMPEDANCE BOND. DOUBLE RAIL TRACK TO NO TRACK.

IMPEDANCE BOND. DOUBLE RAIL TRACK TO SINGLE RAIL TRACK.

IMPEDANCE BOND. DOUBLE RAIL TRACK TO DOUBLE RAIL TRACK.

POINT MACHINE. IF MACHINE IS REMOTE FROM POINTS ADD POINT NUMBER THUS:- 64

------ 440V. OR 220V. MAIN CABLE ROUTE.

-·-·-·- 110V. SUB-MAIN CABLE ROUTE.

——— MULTICORE CABLE ROUTE.

LOC.1. APPARATUS LOCATION. AS SHOWN IN CABLE ROUTE.

LOC.1.

TB	RC	R	F.
30	AA	AA	AB

APPARATUS AT EACH LOCATION TO BE SHOWN.

E99-4.

WIRING SYMBOLS.

D.C. RELAY. RESISTANCE AND DESCRIPTION OF FUNCTION TO BE SHOWN. 1000Ω LR2.

A.C. SINGLE ELEMENT RELAY. DESCRIPTION OF FUNCTION TO BE SHOWN. T.R.R.-AA.

A.C. DOUBLE ELEMENT RELAY. DESCRIPTION OF FUNCTION TO BE SHOWN. 800 T.R.-AA.

A.C. TIME ELEMENT RELAY. SLOW TO PICK. TIME OF OPERATION TO BE SHOWN. 30 SECS. TER.-1.

A.C. TIME ELEMENT RELAY. SLOW RELEASE. TIME OF OPERATION TO BE SHOWN. 30 SECS. TER.-2.

D.C. POINT DETECTOR RELAY. NON INTERLOCKED. 10N 15R.

D.C. POINT DETECTOR RELAY. INTERLOCKED. N R 24.

LINE RELAY OR TRACK RELAY CONTACTS. (DEPENDENT.) T.R.-X. 6.

LINE RELAY OR TRACK RELAY CONTACTS (INDEPENDENT.) T.R.-X. 1. 7.

A.C. DOUBLE ELEMENT POINT DETECTOR RELAY CONTACTS. (INDEPENDENT.) P.D.R.10. NOR. 1. REV. 1.

D.C. POINT DETECTOR RELAY CONTACTS. 10N. 1. 1. 10R. 4. 4.

POLARISED RELAY. 300Ω

POLARISED RELAY CONTACT. A.R.1.

REPEATER. ARM, FOULING BAR, ETC. ARM 1.

LAMP.

BELL, TREMBLING.

BELL, SINGLE STROKE.

BUZZER.

KEY RELEASE CONTACT.

ARM CONTACT. ARM "ON." ARM "OFF."

E99-5

WIRING SYMBOLS.

LATCH CONTACT. ON LEVER CIRCUIT CONTROLLERS.

CATCH HANDLE CONTACT.

PLUNGER CONTACT ("PUSH TO RELEASE" PLUNGER)

FOOT PLUNGER CONTACT.

E.F.B. CONTACT.

L.V.T. CONTACT

TREADLE CONTACT. NORMALLY OPEN.

TREADLE CONTACT. NORMALLY CLOSED.

CLOSING SWITCH.

CLOSING SWITCH CONTACTS.

RESISTANCE. FIXED. VALUE TO BE SHOWN. 500Ω

RESISTANCE. VARIABLE. VALUE TO BE SHOWN. 0-500Ω

CONDENSER. FIXED. VALUE TO BE SHOWN. 20 MF.

CONDENSER. VARIABLE. VALUE TO BE SHOWN. 0-20 MF.

TRANSFORMER. STATE VOLTAGES. 220V/110V.

OR WHEN TAPPINGS ARE SHOWN.

LOWER VOLTAGE. t0. t1. t2. TO. T1. T2. T3. HIGHER VOLTAGE.

RECTIFIER. FULL WAVE. BX. NX. BH. NH.

EARTH.

FUSE. STATE CAPACITY ALSO ROW, & NUMBER IN ROW ON FUSE PANEL. R2-4 10 AMP.

TUBE CONNECTOR. STATE POSITION ON FUSE PANEL.

DEMARKATION OF SIGNAL BOX & OUTSIDE WIRING. 6. R

POINT DETECTOR CONTACTS (STANDARD PATTERN - FOUR FOOT WAY.)

ELECTRIC MOTOR, SIGNAL MACHINE ETC. M

E99-6

WIRING SYMBOLS.

POINT MACHINE SWITCH. CONTACT MADE WHEN POINTS NORMAL.

POINT MACHINE SWITCH. CONTACT MADE WHEN POINTS REVERSED.

POINT MACHINE DETECTION CAMS.

POINT MACHINE DETECTION CAMS.

A LOCK DENOTES LOCK IN THE NORMAL, POSITION OF LEVER BETWEEN FULL NORMAL & A. POSITION. A.

E LOCK DENOTES LOCK IN THE REVERSE, POSITION OF LEVER BETWEEN FULL REVERSE & E. POSITION. E.

AE LOCK DENOTES LEVER LOCKED BOTH UNDER THE CONDITION OF A. & E. POSITIONS DESCRIBED ABOVE. AE

B. LOCK DENOTES LOCK IN THE B. POSITION OF LEVER FROM FULL REVERSE. B.

NR LOCK DENOTES LEVER LOCKED IN BOTH NORMAL & REVERSED POSITION. ie. TIGHT LOCK NR

LOCK PROVING SPRING (PROVES LOCK IN) L.P.S.

DC. LOCK

AC LOCK

E99-7

LEVER CONTACTS.

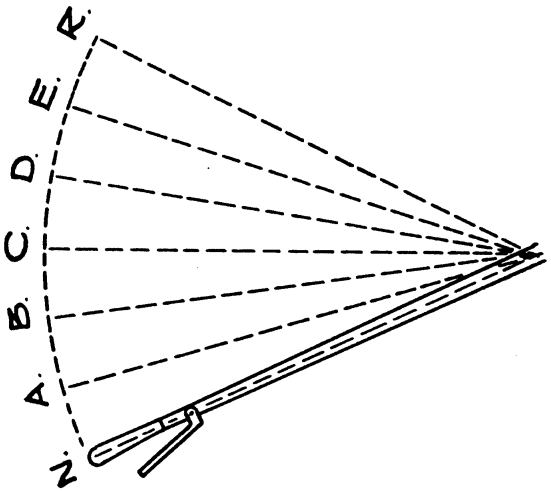

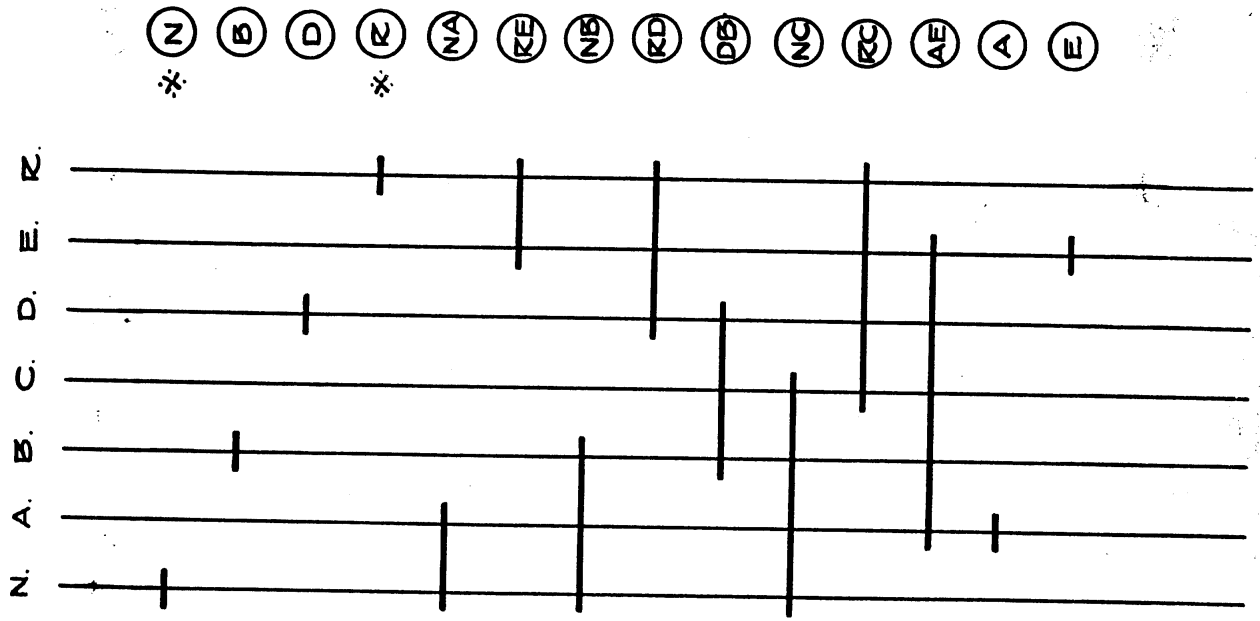

* CONTACT BREAKS INSIDE LOCK POSITION

E99-8

TRR & PDRR WIRING.

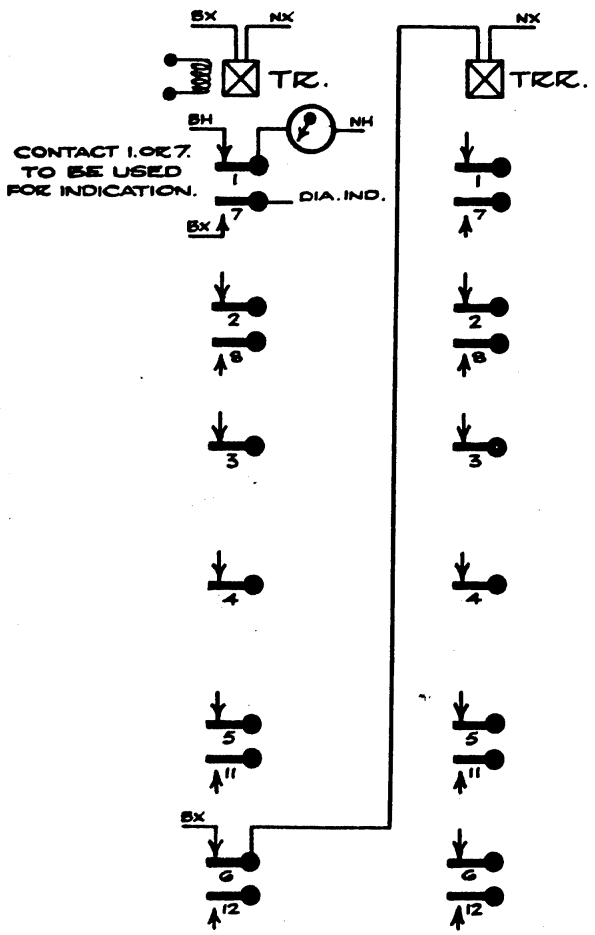

IN THE CASE OF D.C. RELAYS THE LAST CONTACT (Nº 4 OR Nº 6) TO BE USED FOR PICK UP OF REPEATER RELAY.

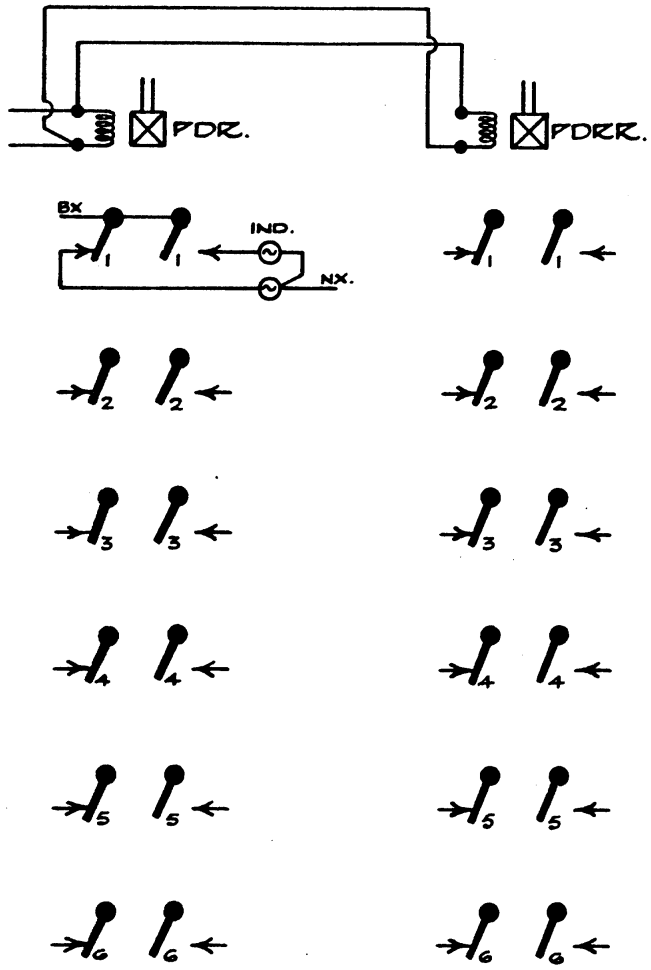

INDICATION OF POINTS WHEN AN ARROW TYPE INDICATOR IS USED TO BE AS FOLLOWS:-

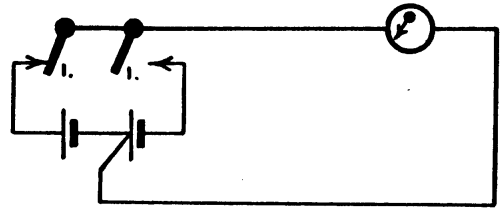

ELECTRICAL DETECTION.

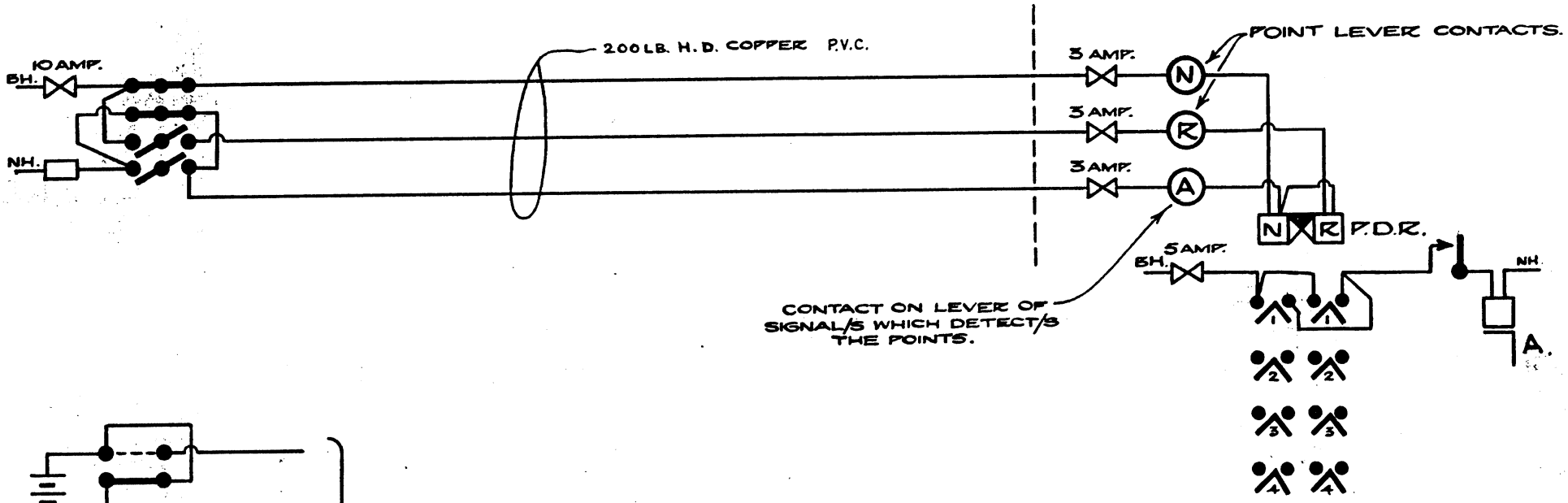

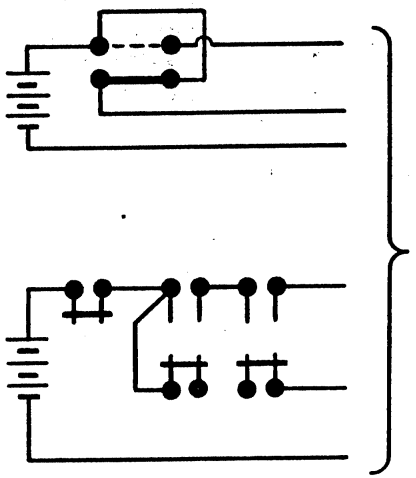

OLD PATTERN DETECTORS USED WITH OR WITHOUT RELAYS.

ELECTRICAL DETECTION

SIEMENS "H.J." TYPE "6FT." DETECTOR

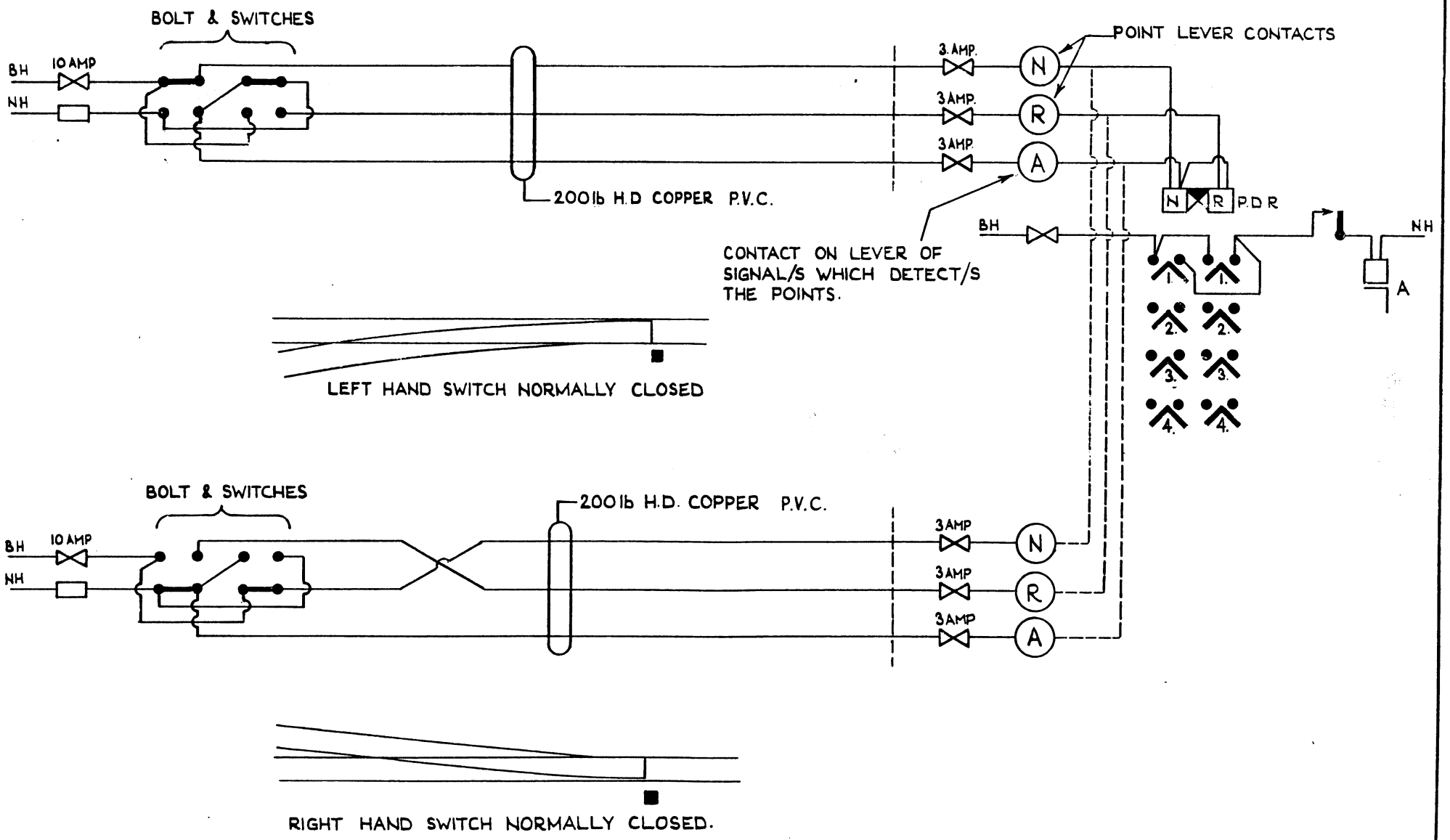

E99-10A

ELECTRICAL DETECTION

SIEMENS "HJ" TYPE "6FT" DETECTOR

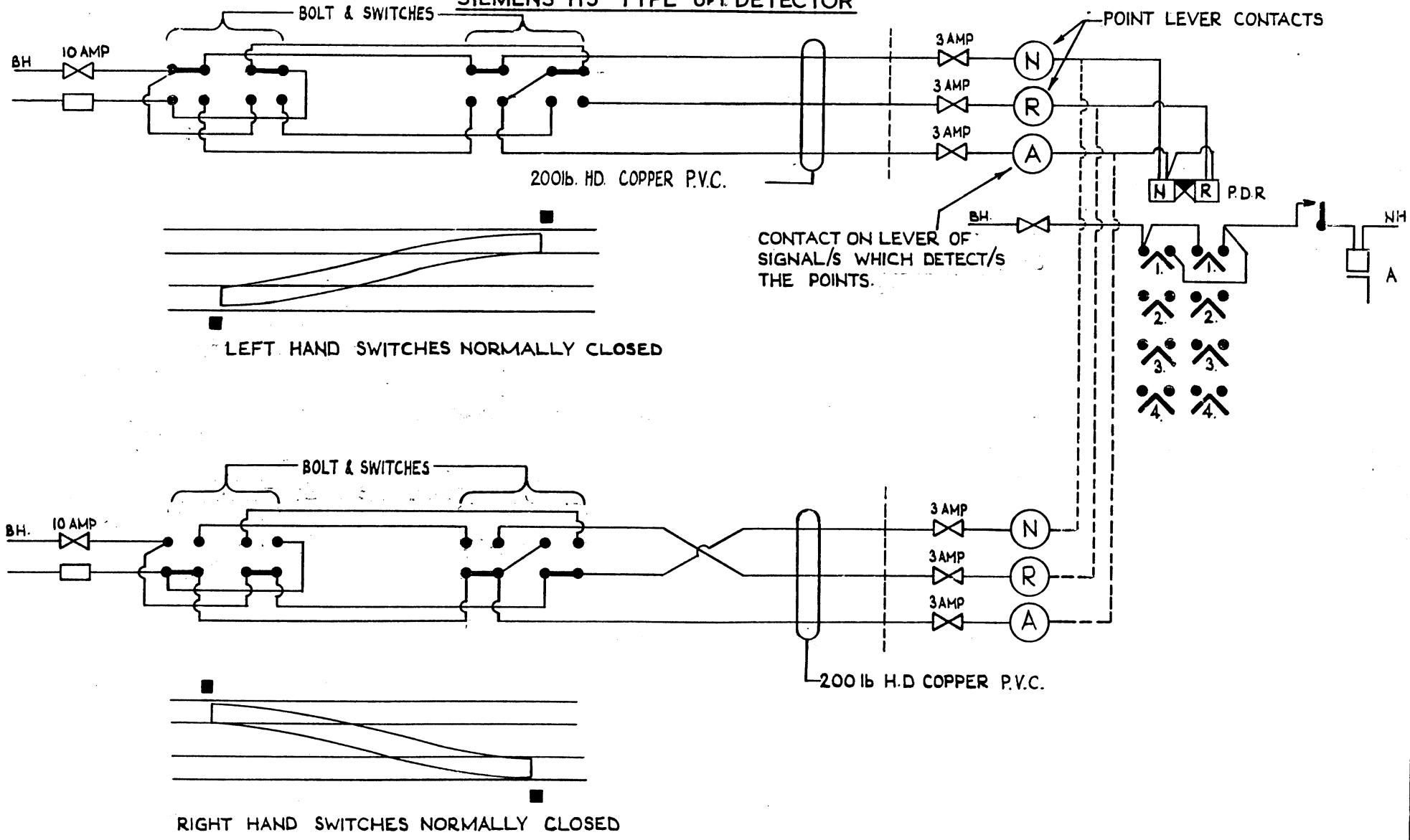

ELECTRICAL DETECTION (AC)

SIEMENS 'HJ' TYPE '6FT' DETECTOR

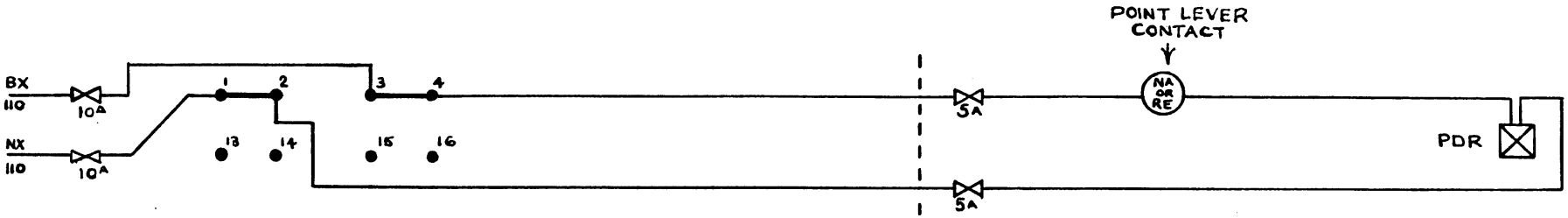

NORMAL DETECTION WITH LEFT HAND SWITCH NORMALLY CLOSED OR REV: DETECTION WITH RIGHT HAND SWITCH NORMALLY CLOSED.

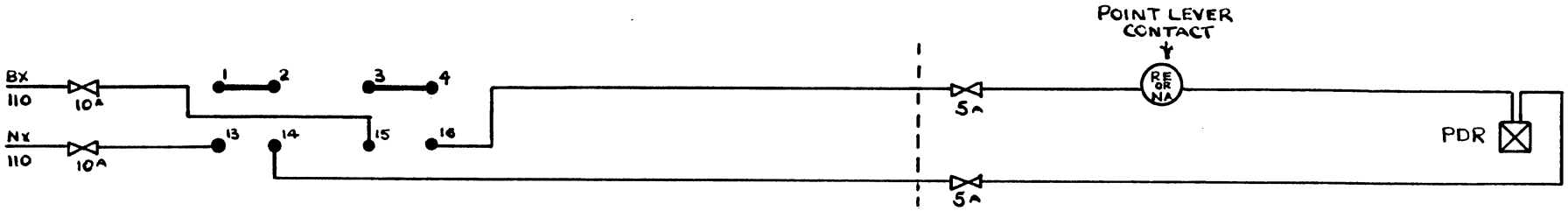

REVERSE DETECTION WITH LEFT HAND SWITCH NORMALLY CLOSED OR NORMAL DETECTION WITH RIGHT HAND SWITCH NORMALLY CLOSED

LEFT HAND SWITCH NORMALLY CLOSED.

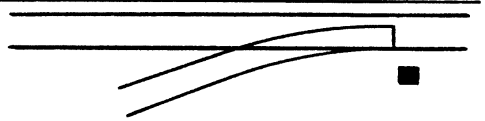

ELECTRICAL DETECTION (AC)

SIEMENS "HJ" TYPE "6 FT" DETECTOR

LEFT HAND SWITCHES NORMALLY CLOSED.

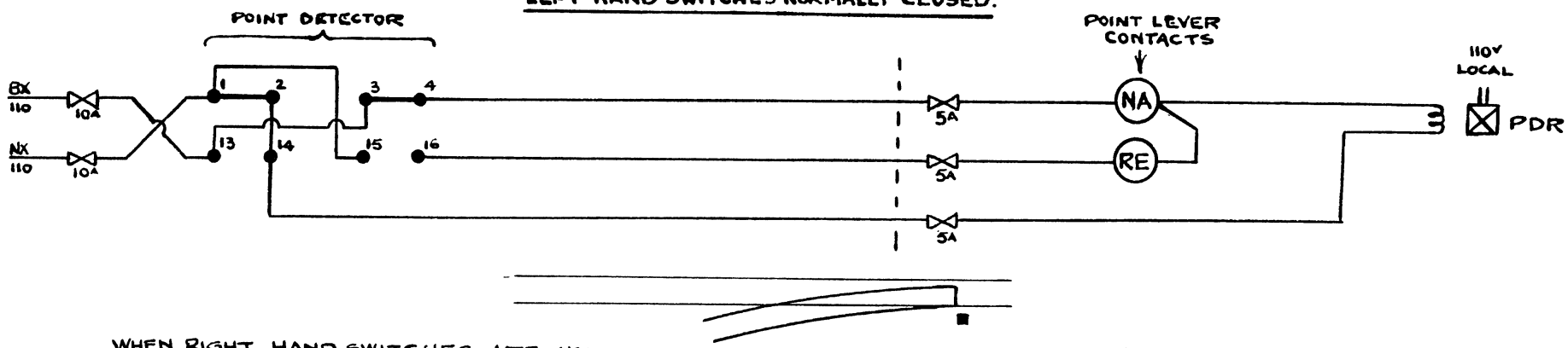

WHEN RIGHT HAND SWITCHES ARE NORMALLY CLOSED BX 110 & NX 110 TO BE INTERCHANGED BETWEEN TERMINALS 1 & 13 AND
NORMAL & REVERSE LINES " " " " " 4 & 16.

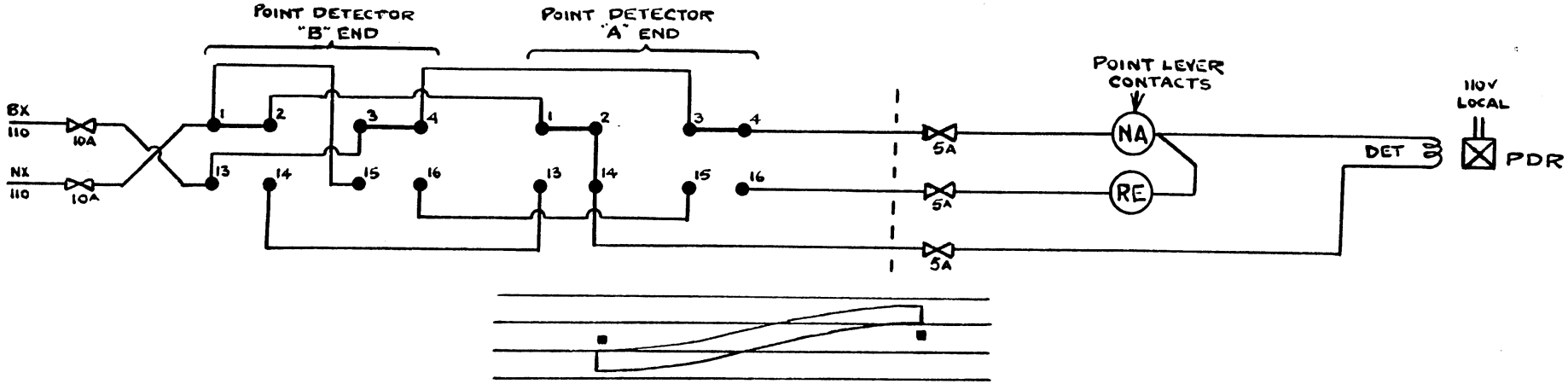

WHEN RIGHT HAND SWITCHES ARE NORMALLY CLOSED BX 110 & NX 110 TO BE INTERCHANGED BETWEEN TERMINALS 1 & 13 AND
NORMAL & REVERSE LINES " " " " " 4 & 16 "A" END.

ELECTRICAL DETECTION.

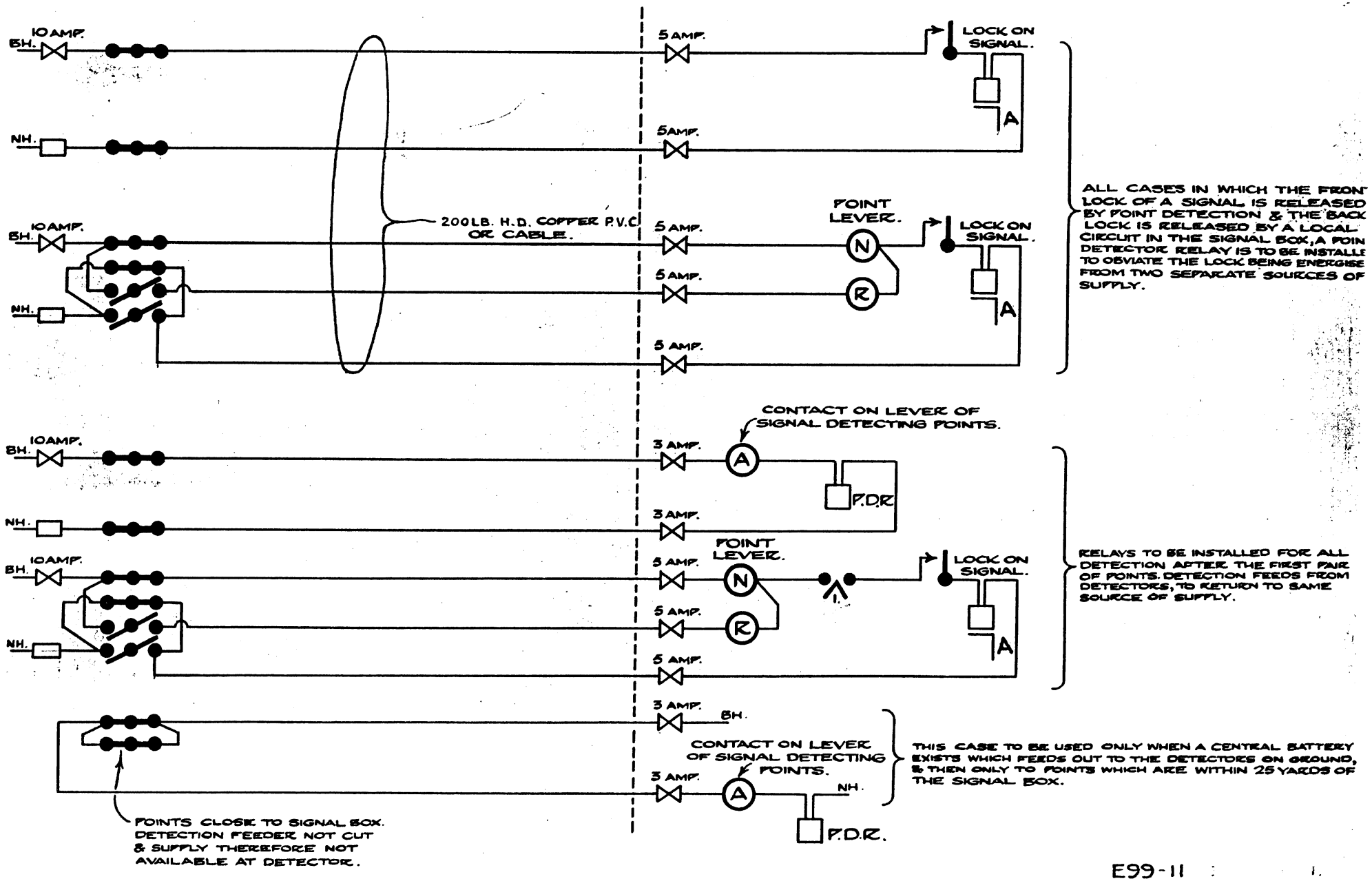

GROUND FRAME RELEASES.

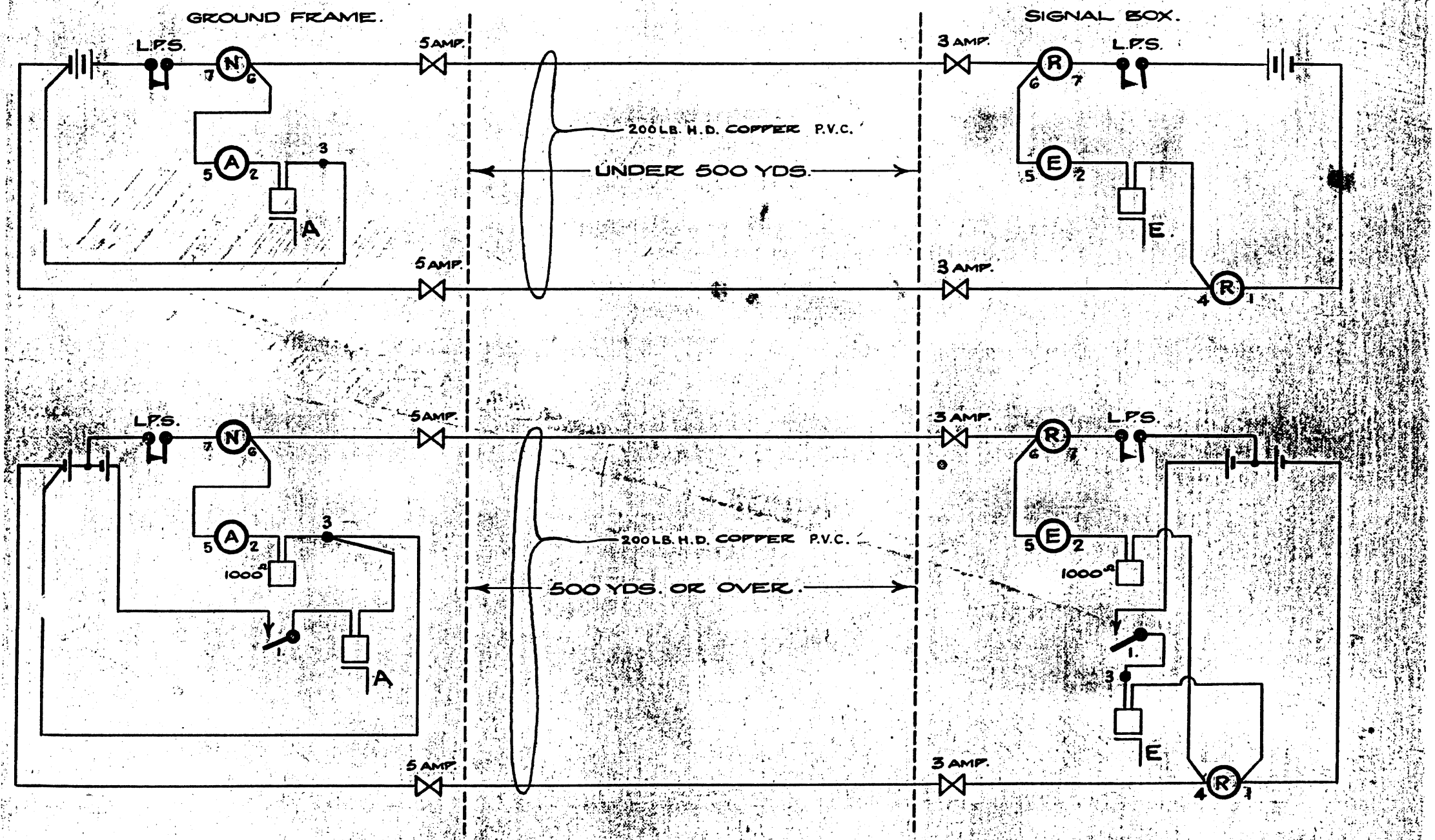

GROUND FRAME RELEASES

NEW CONTACT BLOCK

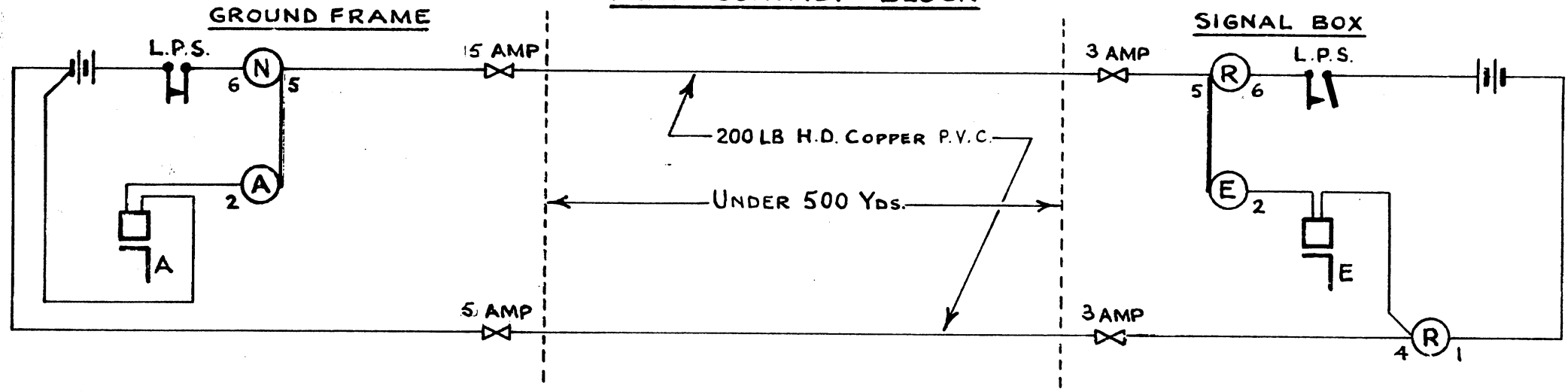

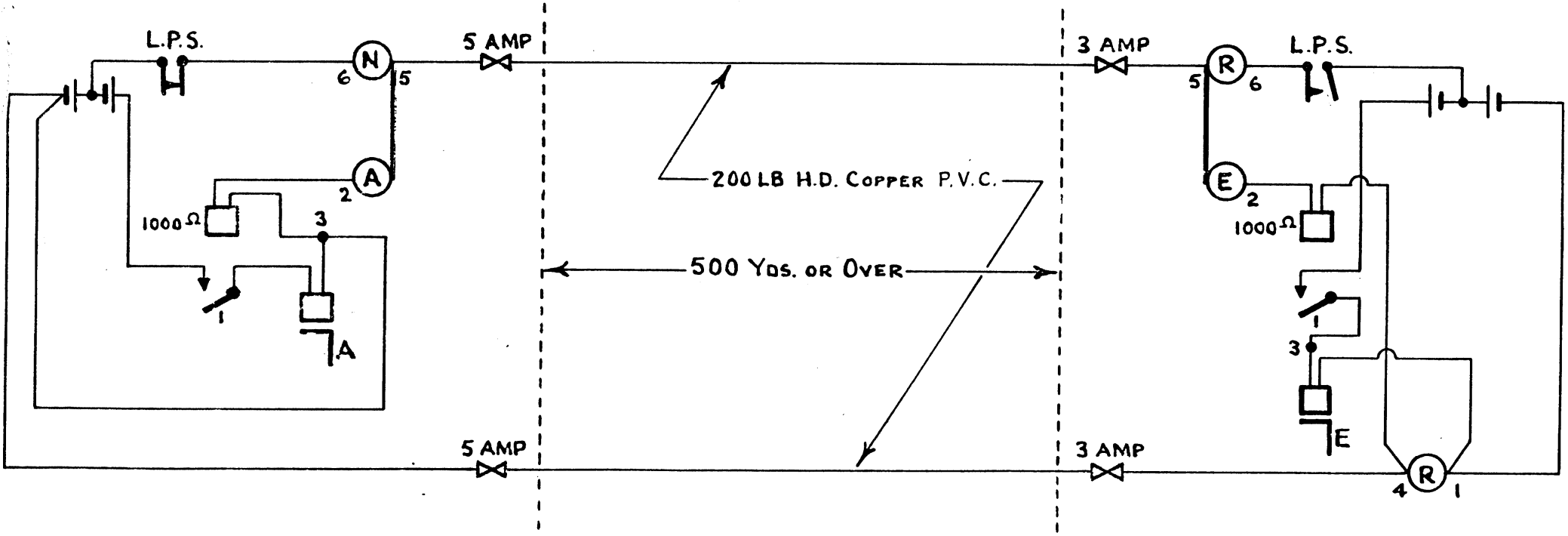

E 99-12A

GROUND FRAME RELEASES.

TWO GROUND FRAMES WITH ONE RELEASE LEVER.

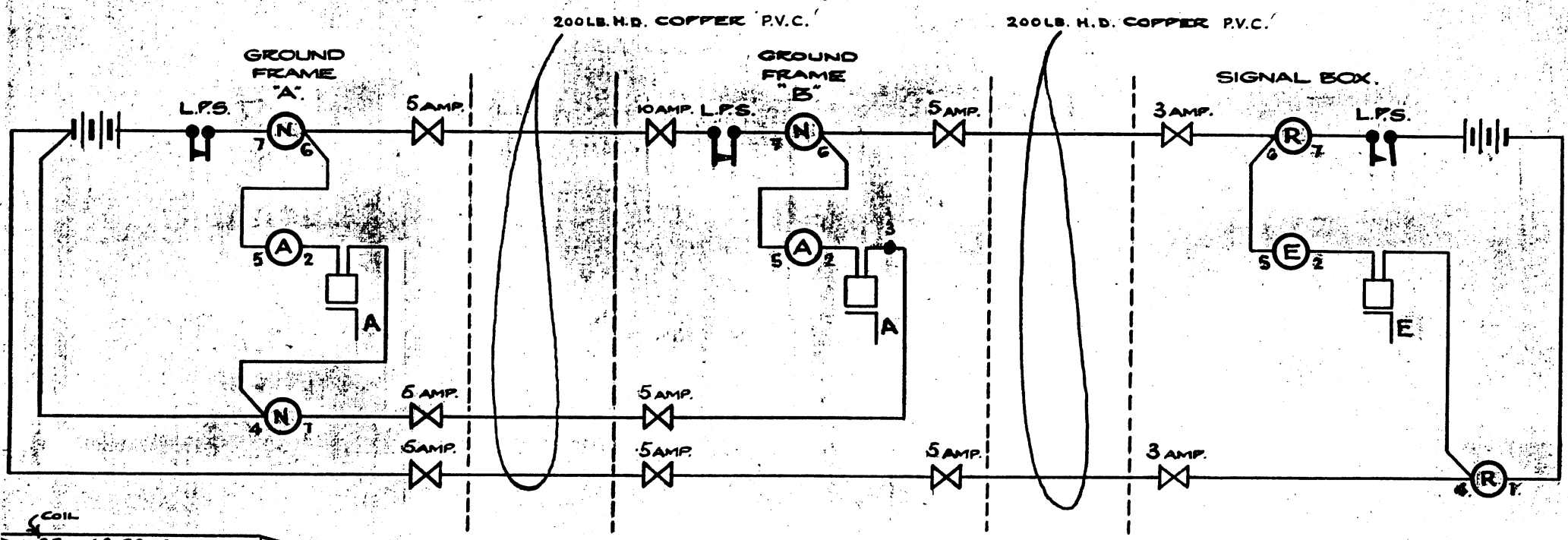

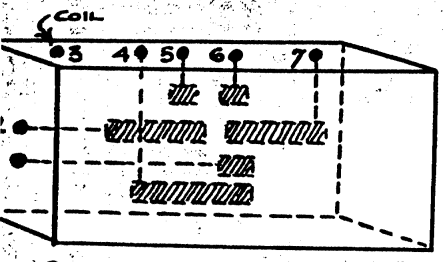

CONTACT BLOCK FOR G.F. RELEASE.

1000Ω LOCK RELAYS TO BE INTRODUCED INTO THE CIRCUIT IF EITHER GROUND FRAME IS MORE THAN 500YDS. FROM THE SIGNAL BOX.

GROUND FRAME RELEASES

TWO GROUND FRAMES WITH ONE RELEASE LEVER

NEW CONTACT BLOCK

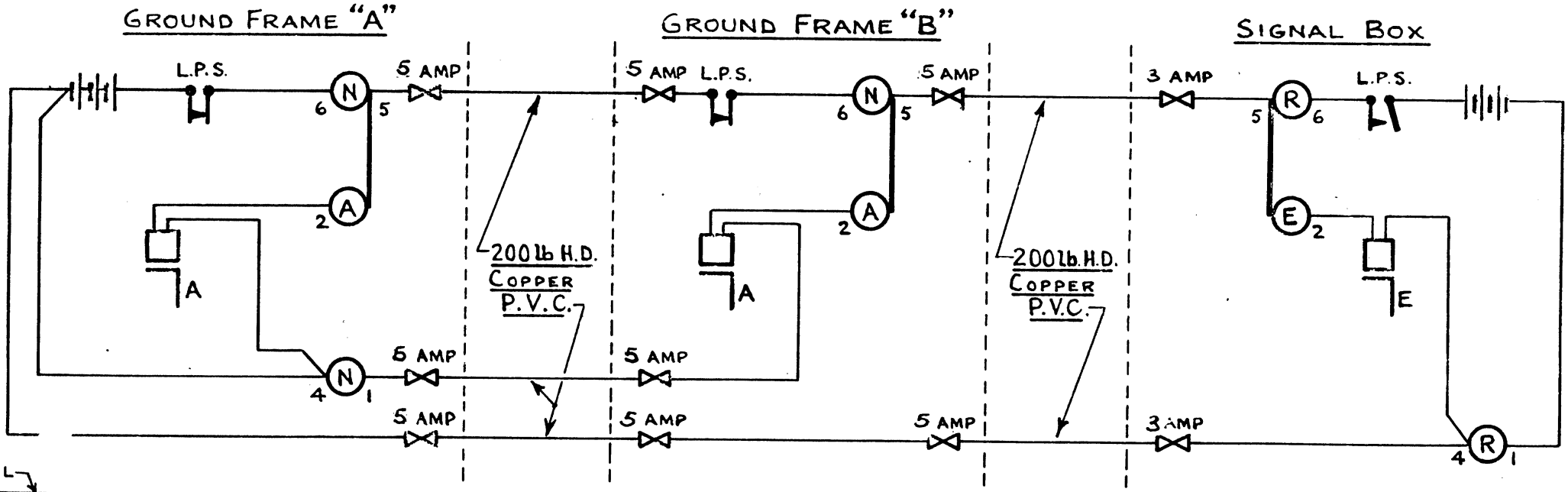

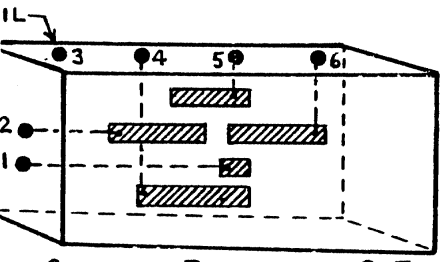

CONTACT BLOCK FOR G.F. RELEASE

1000 Ω LOCK RELAYS TO BE INTRODUCED INTO THE CIRCUIT IF EITHER GROUND FRAME IS MORE THAN 500 YDS FROM THE SIGNAL BOX

LEATHERHEAD SCHEME.

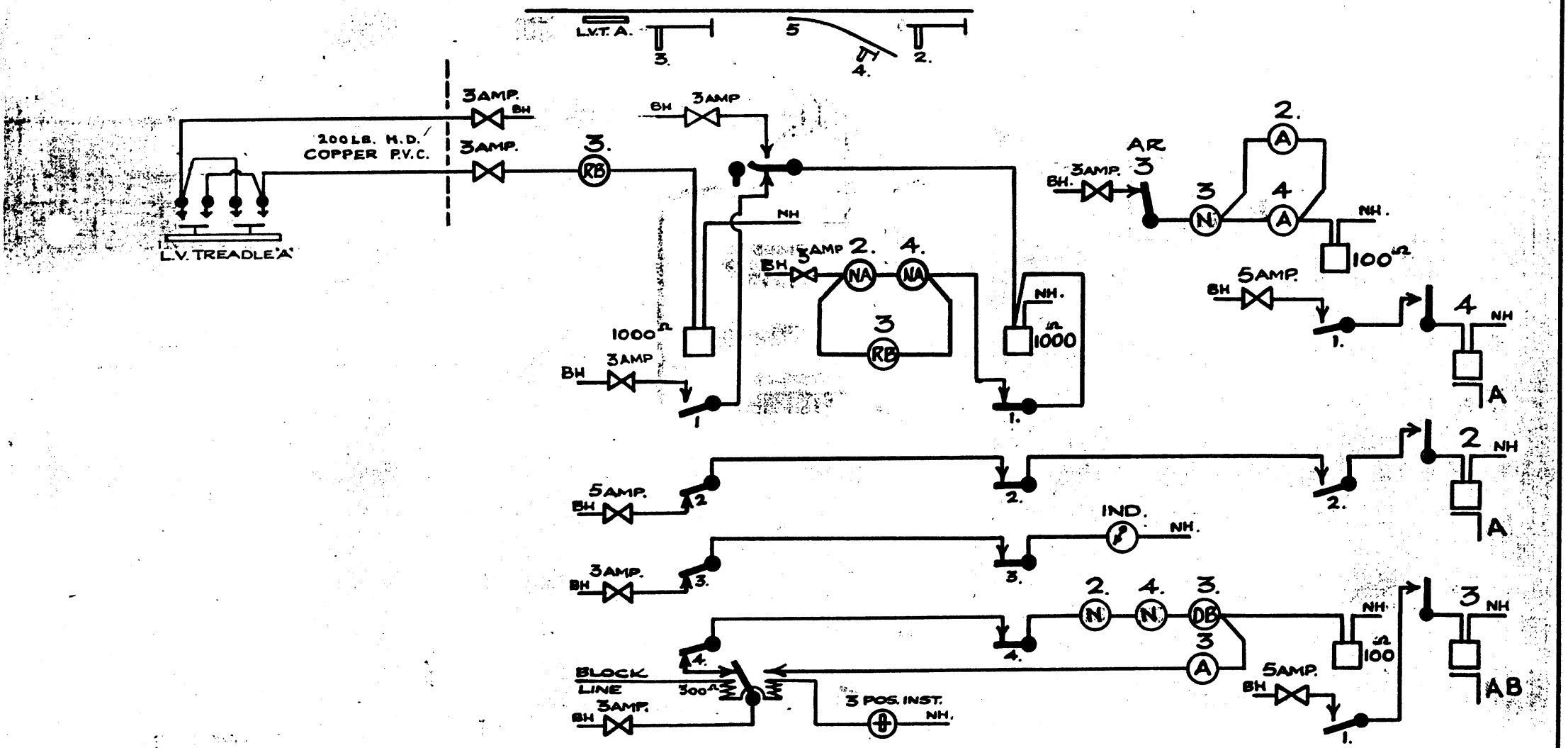

KEY RELEASE

WORK	NORMAL LOCK RELEASED BY				AFTER USE RELEASED BY	BACKLOCK RELEASED BY.		LOCKS.
	BLOCK IND. LINE CLEAR FROM	ARM	LEVER			L.V. TREADLE.	LEVER.	
2		3	3		L.V. TREADLE A. OPER.			
3	BOX AHEAD.				#	A. #	2.4.	
4		3	3					2 TILL L.V. TREADLE A. OPERATED #

E99-14

TREADLE BACKLOCK WITH SYKES INSTRUMENT.

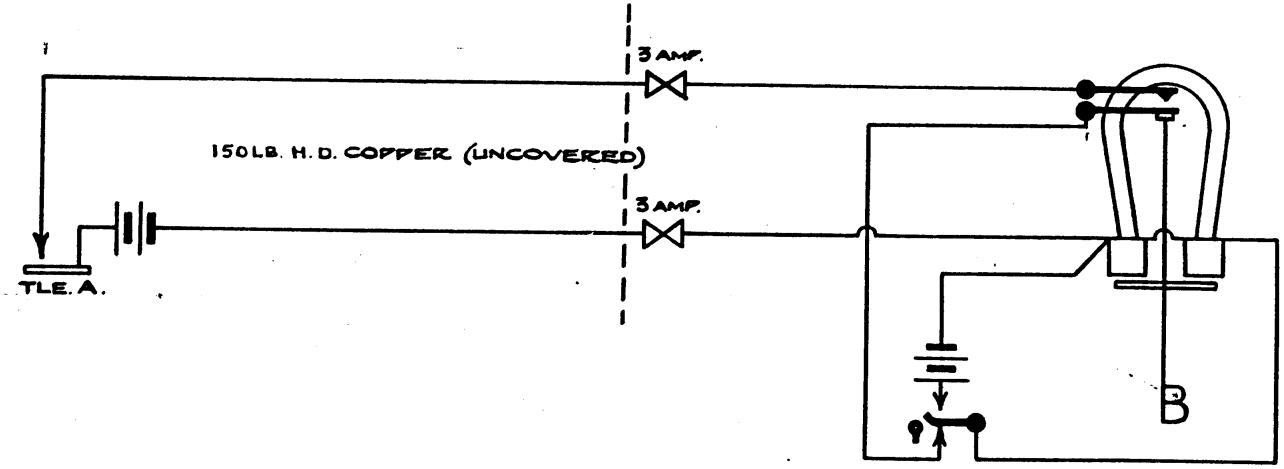

E99-15

L.V.T. BACKLOCK WORKING WITH SYKES INST.

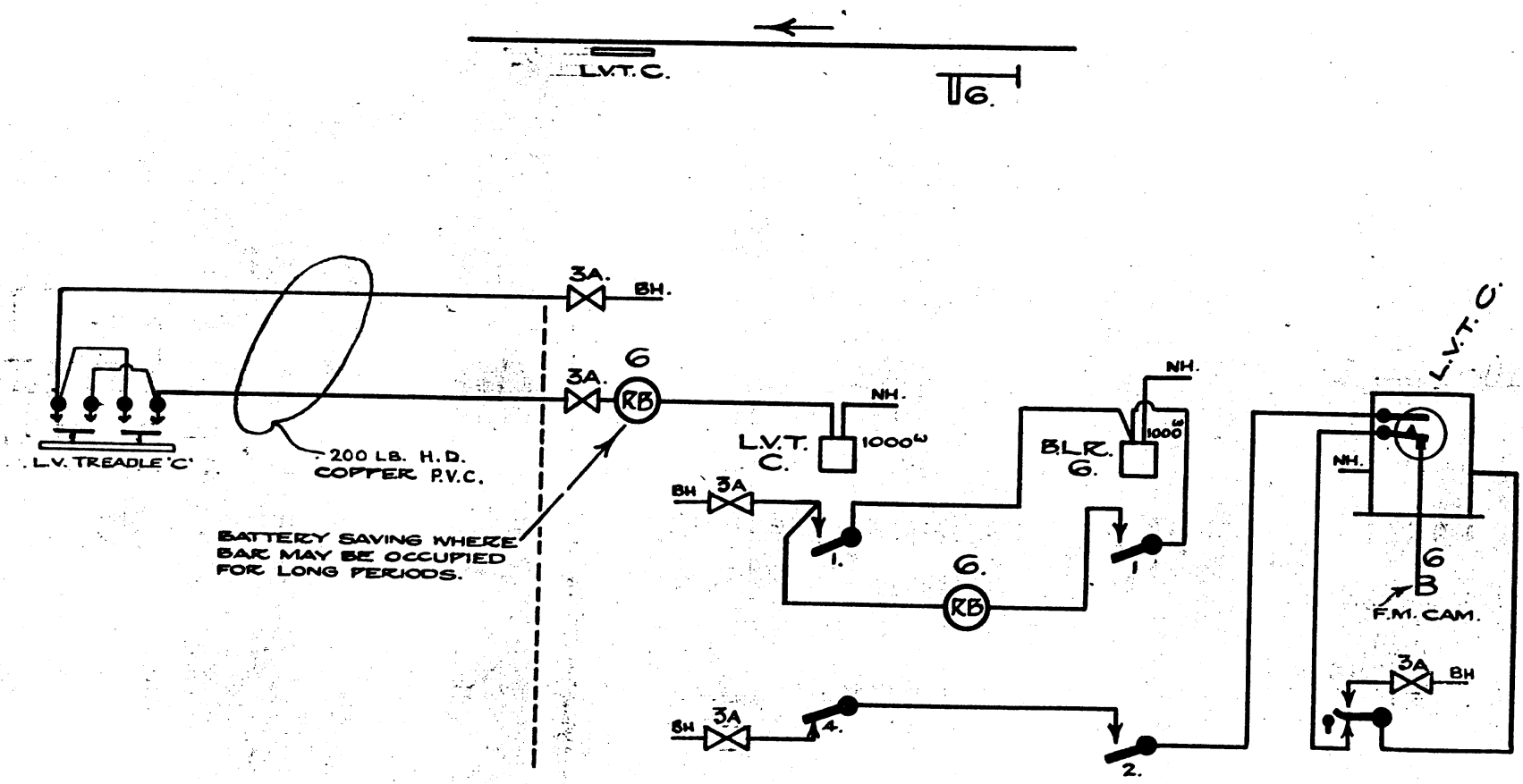

TREADLE BACKLOCK WITH STICK RELAY.

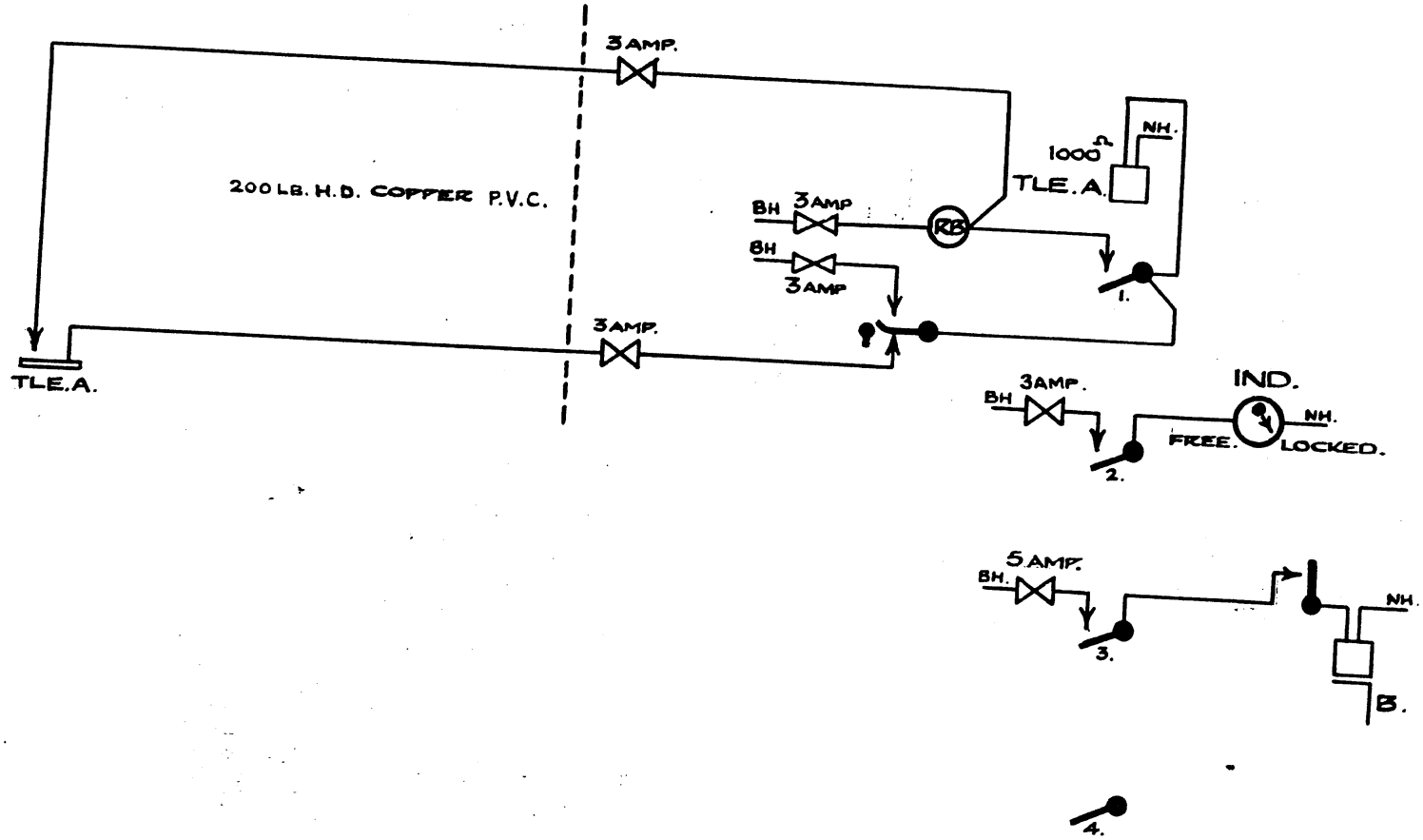

E99:16

TRAIN WAITING TREADLE & SIGNAL BACKLOCK.

FOR OPEN & CLOSED BLOCK

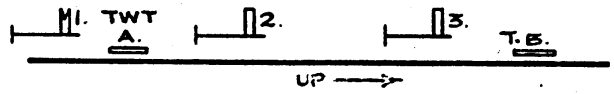

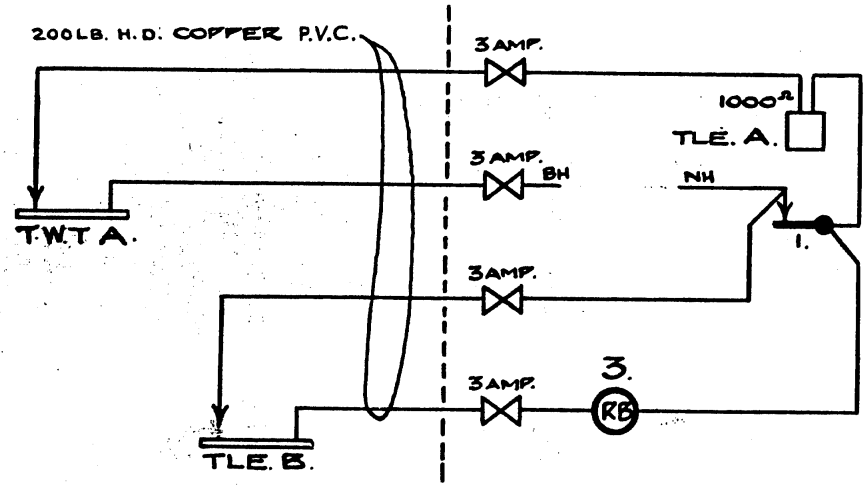

COMMUTATOR LOCK TO BE RELEASED BY AR 2. & OR AR 3. IF ARMS 2. OR 3 ARE REPEATED IN SIGNAL BOX.

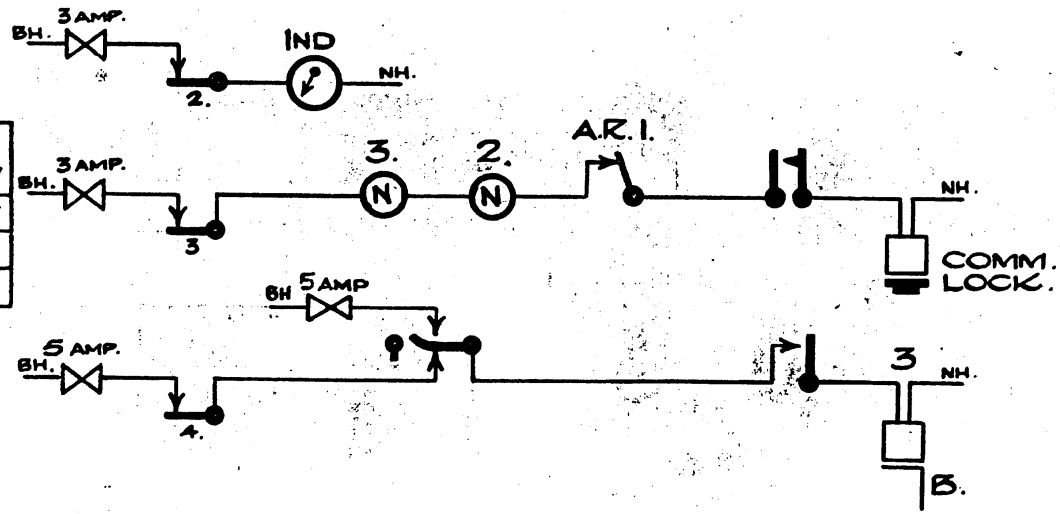

WORK	NORMAL LOCK				BACKLOCK RELEASED BY TREADLE
	RELEASED BY			AFTER USE RELEASED BY	
	ARM	TRDL	LEVER		
UP COMMUTATOR	1	A	2. 3.	3 PULLED & TRDL. B OPERATED AFTER TRDL. A OPERATED	
3					B AFTER TRDL. A OPERATED.

AFTER TRAIN WAITING TREADLE 'A' HAS BEEN OF ATED, INDICATOR WILL SHEW TRAIN WAITING, UNTIL 3 PULLED & TREADLE 'B' OPERATED.

E99-17

TRAIN WAITING TREADLE WITH TRACK CIRCUIT RESETTING.

FOR OPEN & CLOSED BLOCK

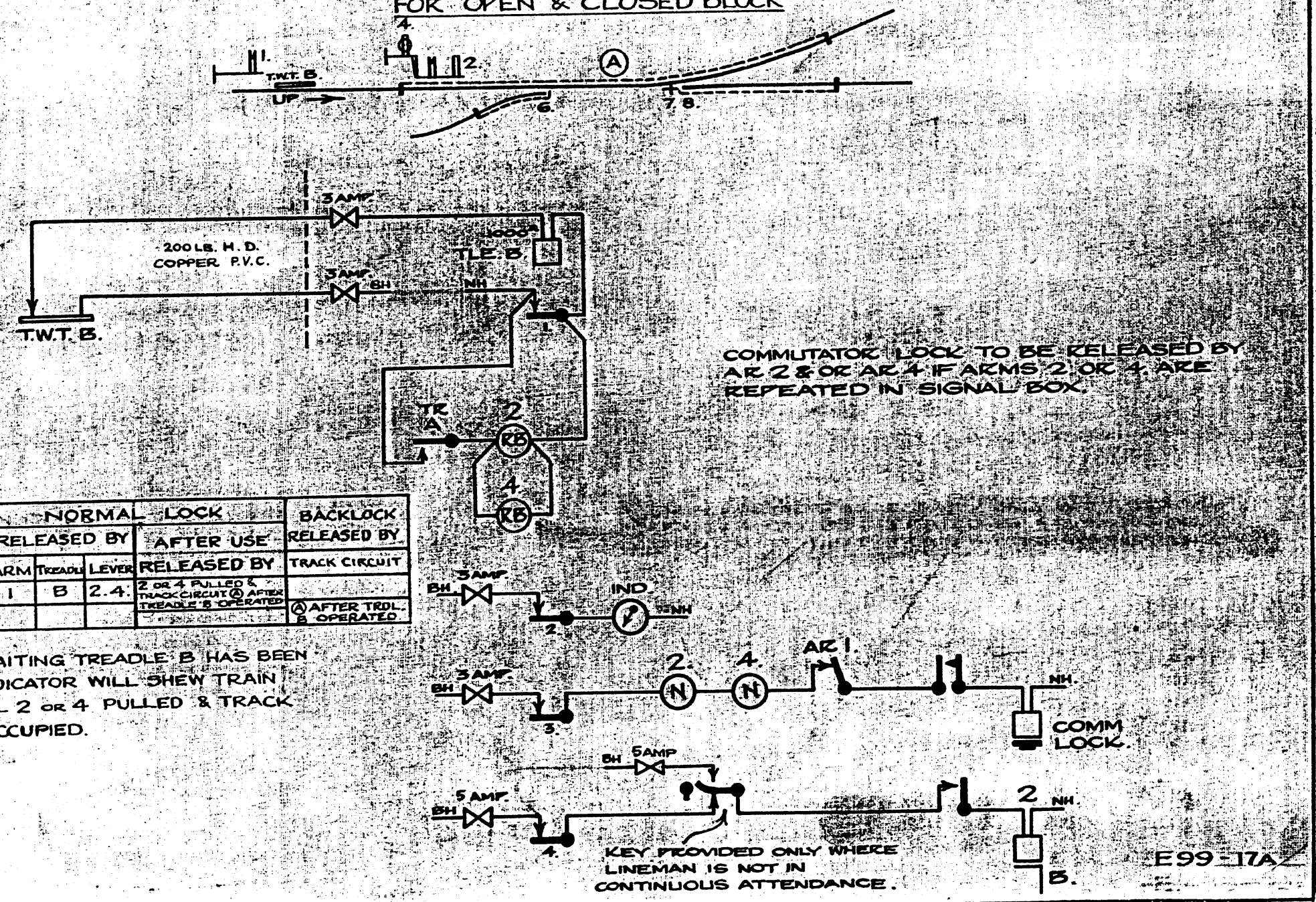

WORK	NORMAL LOCK				BACKLOCK
	RELEASED BY			AFTER USE	RELEASED BY
	ARM	TREADLE	LEVER	RELEASED BY	TRACK CIRCUIT
P COMMUTATOR	1	B	2.4.	2 OR 4 PULLED & TRACK CIRCUIT Ⓐ AFTER TREADLE B OPERATED	Ⓐ AFTER TRDL. B OPERATED

FTER TRAIN WAITING TREADLE B HAS BEEN OPERATED, INDICATOR WILL SHEW TRAIN WAITING UNTIL 2 OR 4 PULLED & TRACK CIRCUIT A OCCUPIED.

T.W. TREADLE & SIGNAL BACKLOCK WITH SYX WHERE SIGNAL 2 RESETS PLUNGER

17B

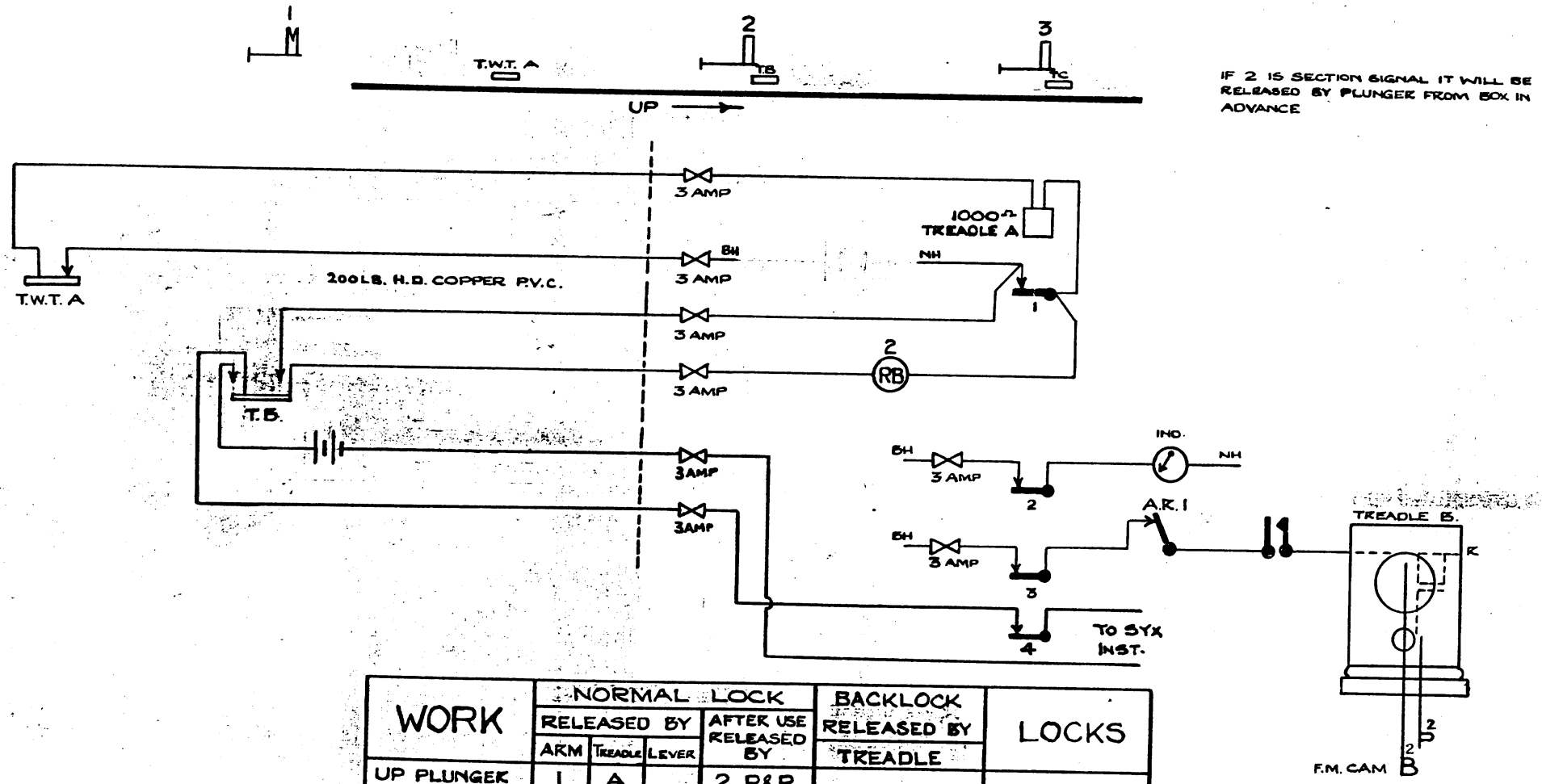

WORK	NORMAL LOCK				BACKLOCK	LOCKS
	RELEASED BY			AFTER USE RELEASED BY	RELEASED BY	
	ARM	TREADLE	LEVER		TREADLE	
UP PLUNGER	1	A		2 P&R		
2	3*		3		B	

AFTER TRAIN WAITING TREADLE 'A' HAS BEEN OPERATED, INDICATOR WILL SHEW 'TRAIN WAITING' UNTIL 2 PULLED & TREADLE B OPERATED.

* ONLY IF REPEATED

E99-17B

T.W. TREADLE & SIGNAL BACKLOCK WITH SYX WHERE SIGNALS 2 & 3 RESET PLUNGER

(17c)

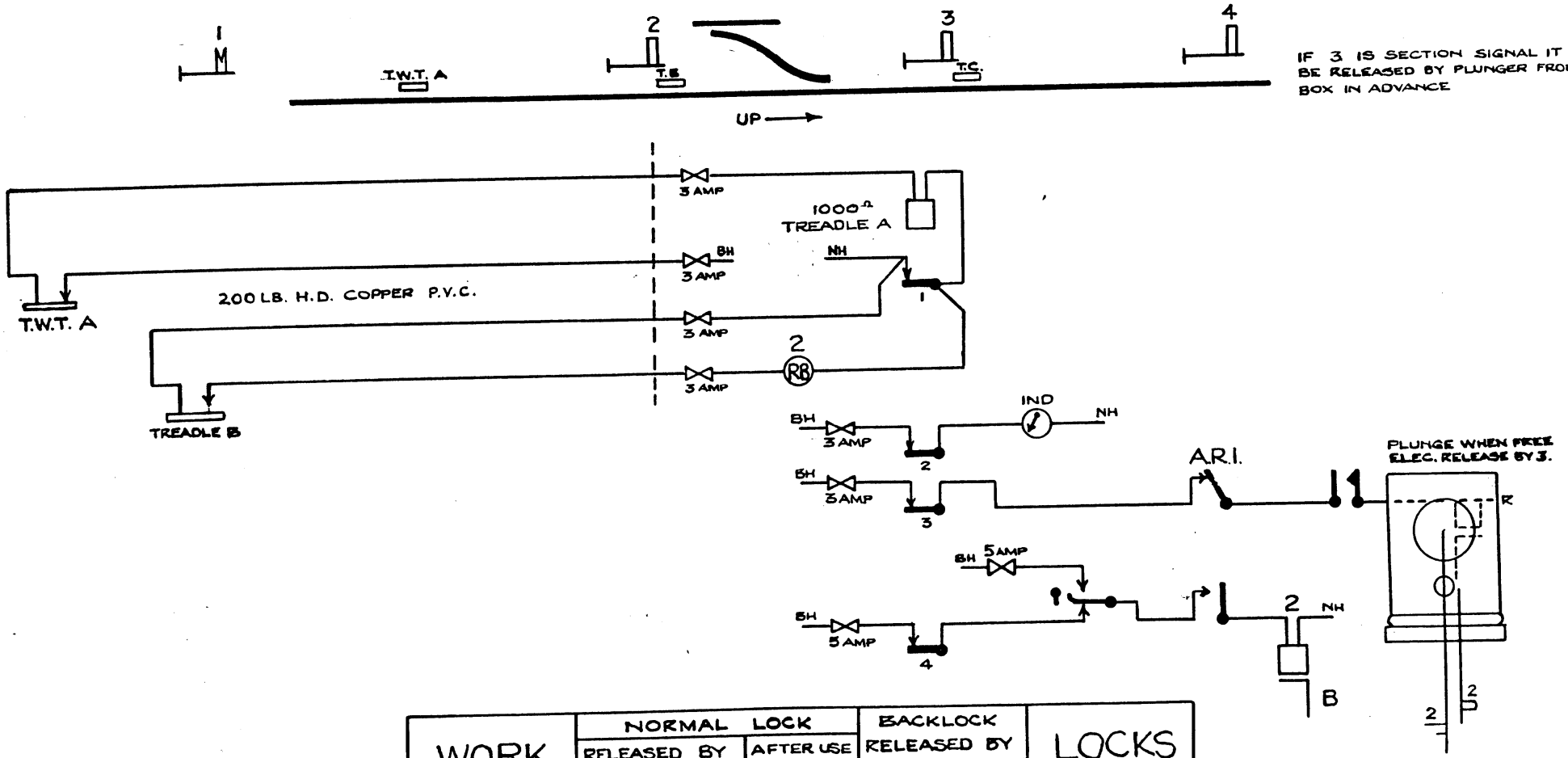

WORK	NORMAL LOCK				BACKLOCK RELEASED BY	LOCKS
	RELEASED BY			AFTER USE RELEASED BY	TREADLE	
	ARM	TREADLE	LEVER			
UP PLUNGER	1	A		2&3 P&R		
2				3 P&R	B AFTER TREADLE A OPERATED.	UP PLUNGER
3	4*		4		C	

AFTER TRAIN WAITING TREADLE 'A' HAS BEEN OPERATED, INDICATOR WILL SHEW 'TRAIN WAITING' UNTIL 2 PULLED & TREADLE 'B' OPERATED.

* ONLY IF REPEATED

E99 - 17c

T.W. TREADLE & SIGNAL BACKLOCK WITH SYX

WHERE SIGNAL 3 RESETS PLUNGER.

17D

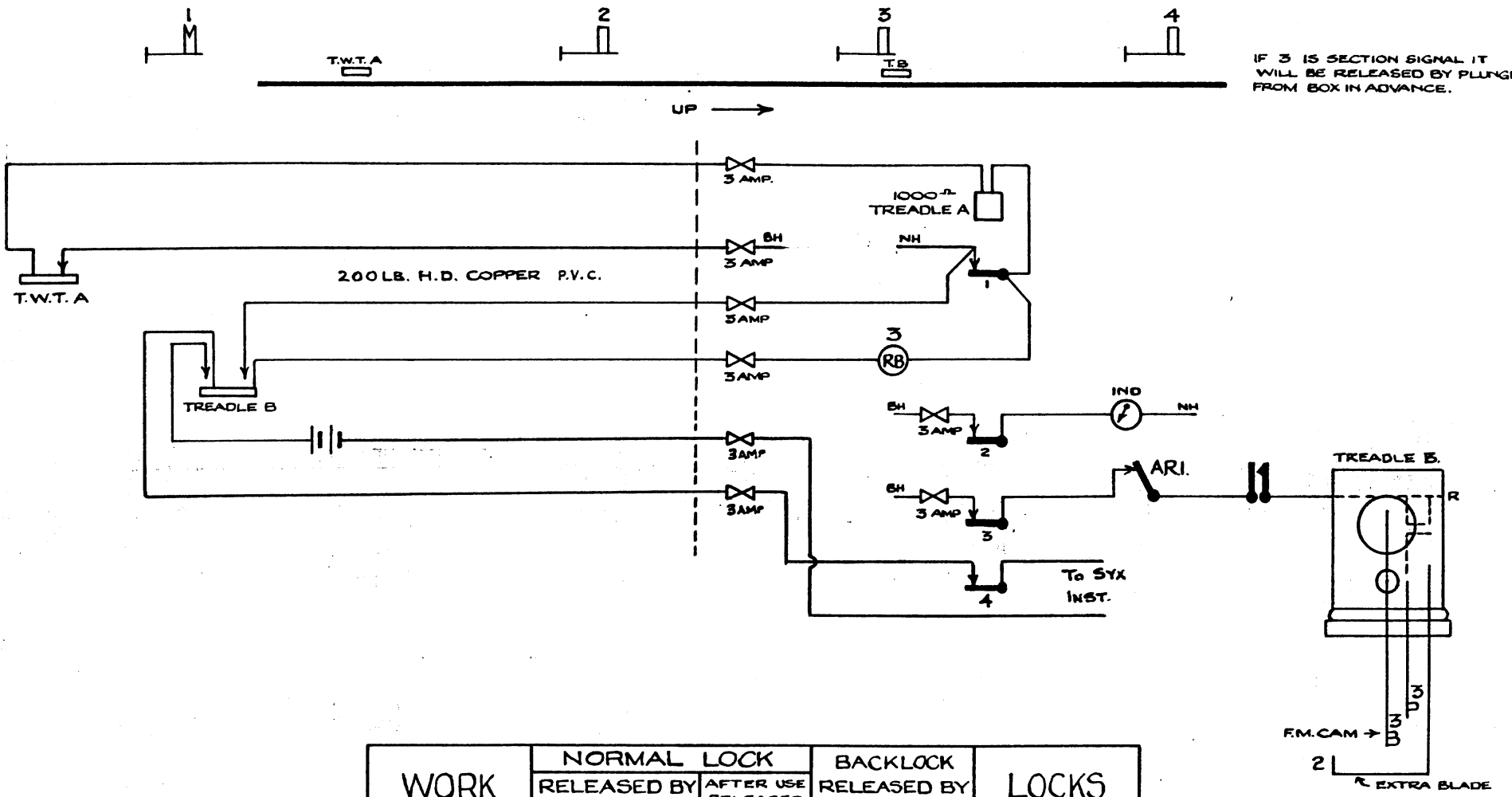

IF 3 IS SECTION SIGNAL IT WILL BE RELEASED BY PLUNGER FROM BOX IN ADVANCE.

WORK	NORMAL LOCK				BACKLOCK	LOCKS
	RELEASED BY			AFTER USE RELEASED BY	RELEASED BY	
	ARM	TREADLE	LEVER		TREADLE	
UP PLUNGER	1	A		3 P&R		
2						UP PLUNGER
3	4*		4		B	

AFTER TRAIN WAITING TREADLE 'A' HAS BEEN OPERATED, INDICATOR WILL SHEW 'TRAIN WAITING' UNTIL 3 PULLED & TREADLE B OPERATED.

* ONLY IF REPEATED

E99 - 17D

TRAIN WAITING TREADLES & SIGNAL BACKLOCKS. (18)

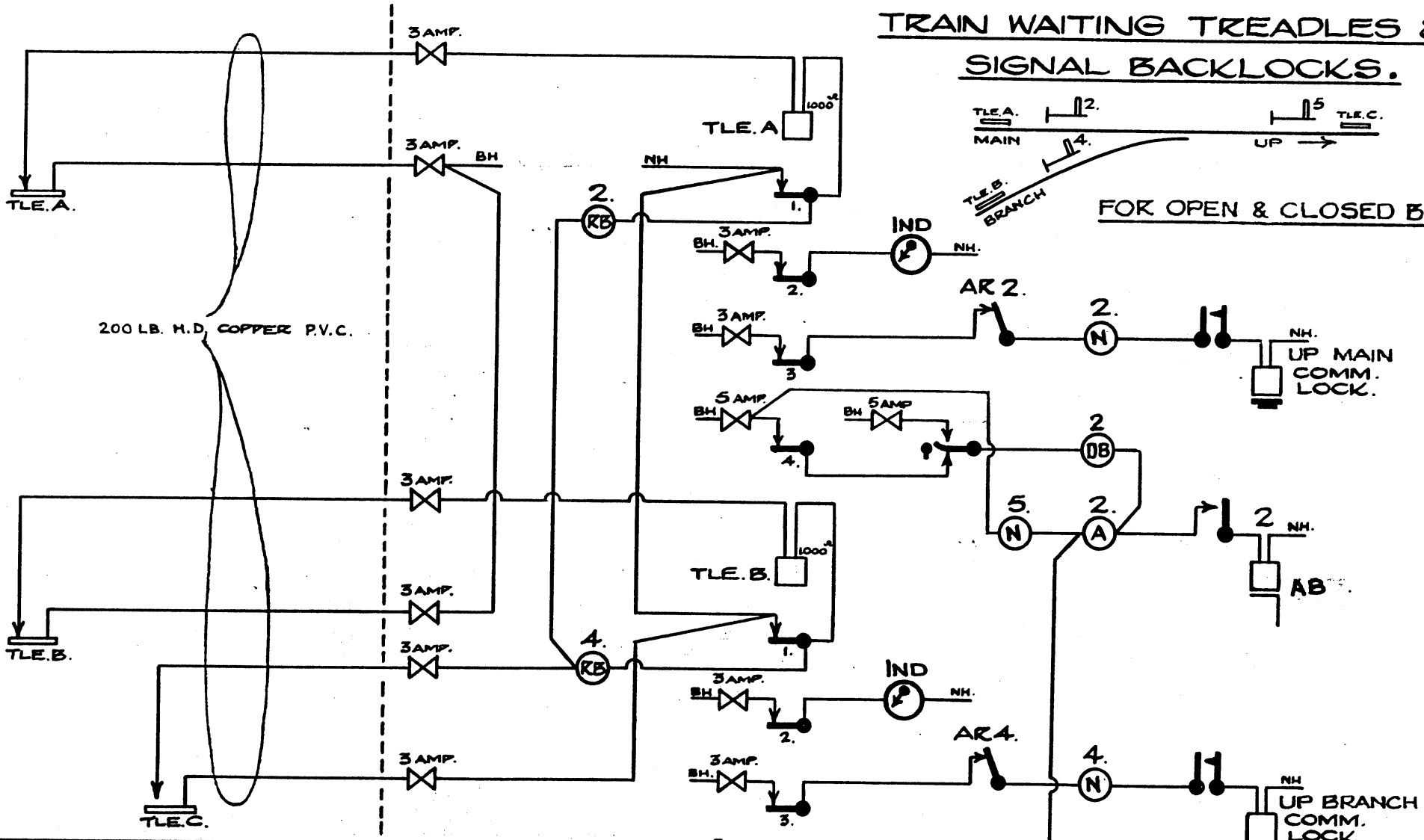

WORK	NORMAL LOCK RELEASED BY ARM	TREADLE	LEVER	AFTER USE RELEASED BY	BACKLOCK RELEASED BY TREADLE
UP MAIN COMM.	2	A	2	2 PULLED & TRDL. C OPERATED AFTER TRDL. A OPERATED.	
UP BRANCH COMM.	4	B	4	4 PULLED & TRDL. C OPERATED AFTER TRDL. B OPERATED.	
2			5		C AFTER TREADLE A OPERATED.
4			5		C AFTER TREADLE B OPERATED.

AFTER TRAIN WAITING TREADLE A HAS BEEN OPERATED, INDICATOR WILL SHEW TRAIN WAITING UNTIL 2 PULLED & TRDL. C OPERATED

AFTER TRAIN WAITING TREADLE B HAS BEEN OPERATED, INDICATOR WILL SHEW TRAIN WAITING UNTIL 4 PULLED & TRDL C OPERATED.

E99-18

TWO TRACK CIRCUITS OCCUPIED BACK LOCK.

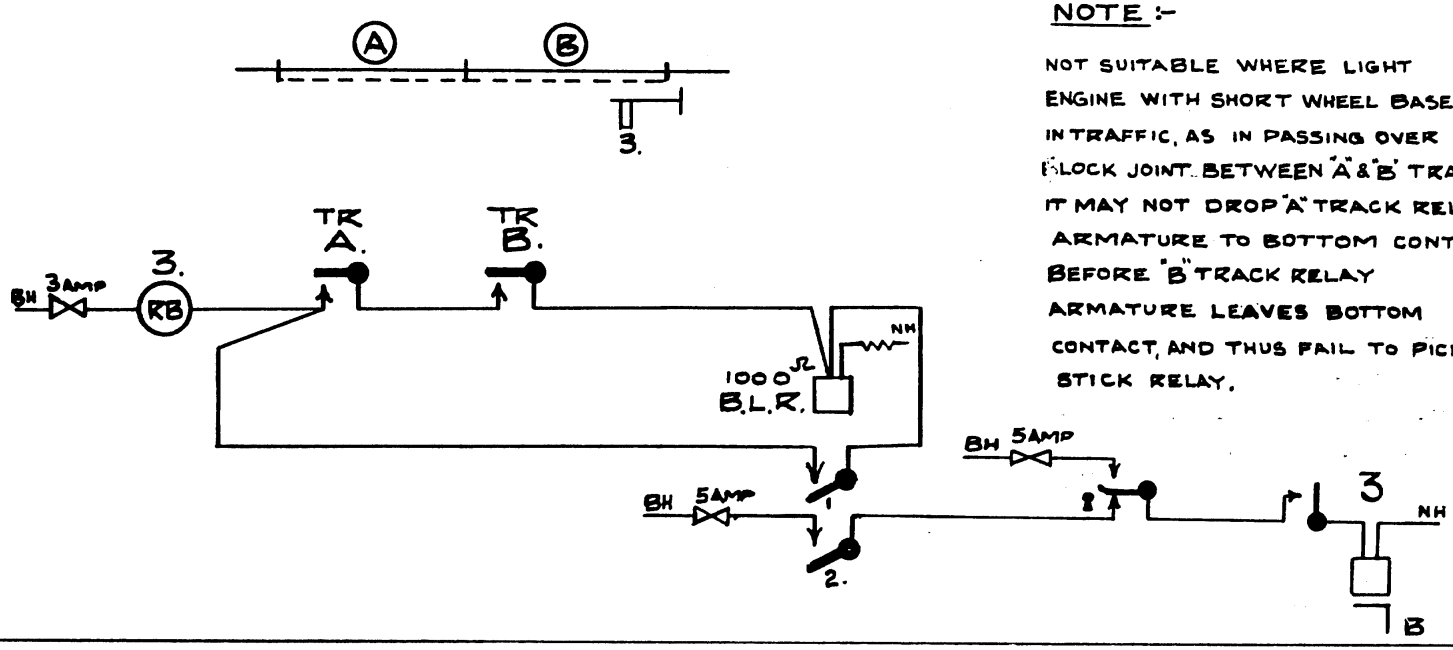

NOTE :-

NOT SUITABLE WHERE LIGHT ENGINE WITH SHORT WHEEL BASE IS IN TRAFFIC, AS IN PASSING OVER BLOCK JOINT BETWEEN "A" & "B" TRACKS IT MAY NOT DROP "A" TRACK RELAY ARMATURE TO BOTTOM CONTACT BEFORE "B" TRACK RELAY ARMATURE LEAVES BOTTOM CONTACT, AND THUS FAIL TO PICK UP STICK RELAY.

TWO TRACK CIRCUITS OCCUPIED BACK LOCK.

FOR USE IN SPECIAL CASES.

i.e. WHERE LIGHT ENGINE WITH SHORT WHEEL BASE IS IN TRAFFIC (SEE NOTE ABOVE)

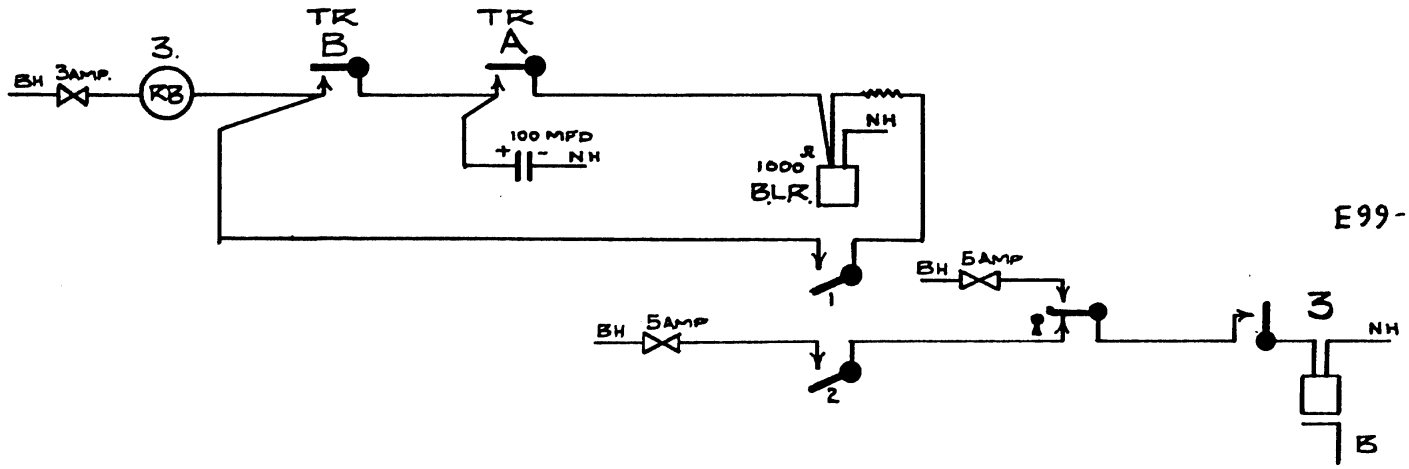

E99-19

ONE TRACK CIRCUIT OCCUPIED & CLEAR BACKLOCK.

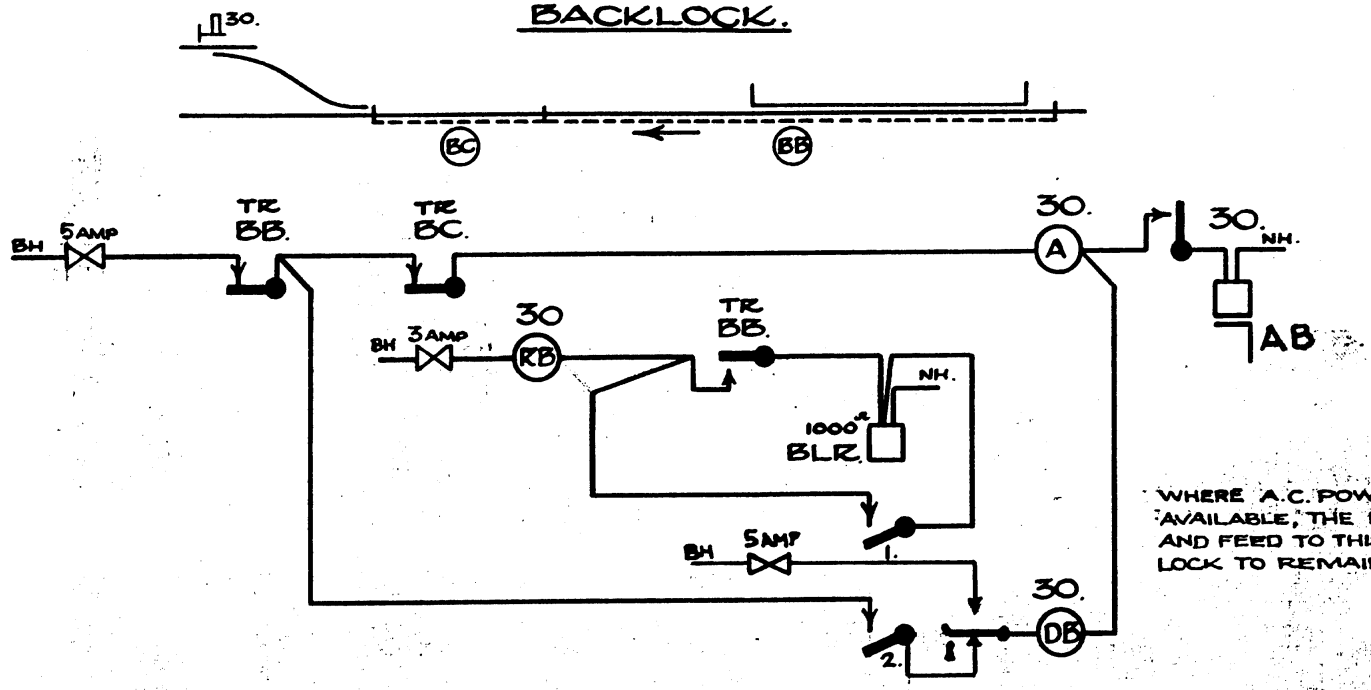

WHERE A.C. POWER SUPPLY IS AVAILABLE, THE RELAY TO BE A.C. AND FEED TO THIS THEREFORE BX & NX. LOCK TO REMAIN D.C.

TWO TRACK CIRCUITS OCCUPIED CONDITIONAL BACK LOCK.

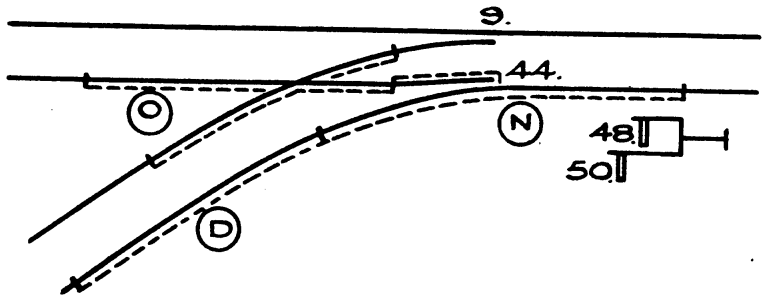

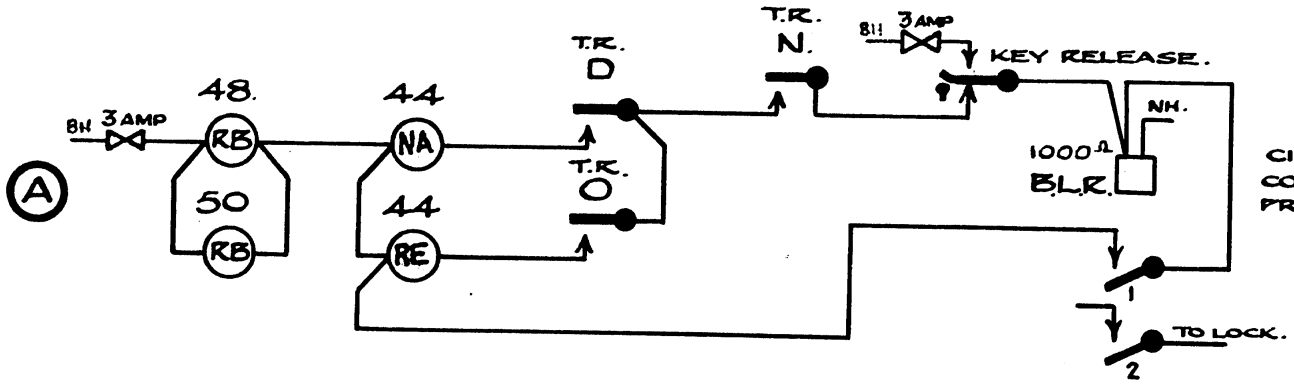

CIRCUIT A. TO BE USED WHEN CONTROLLER ON LEVER 44 IS PROVIDED FOR OTHER CIRCUITS.

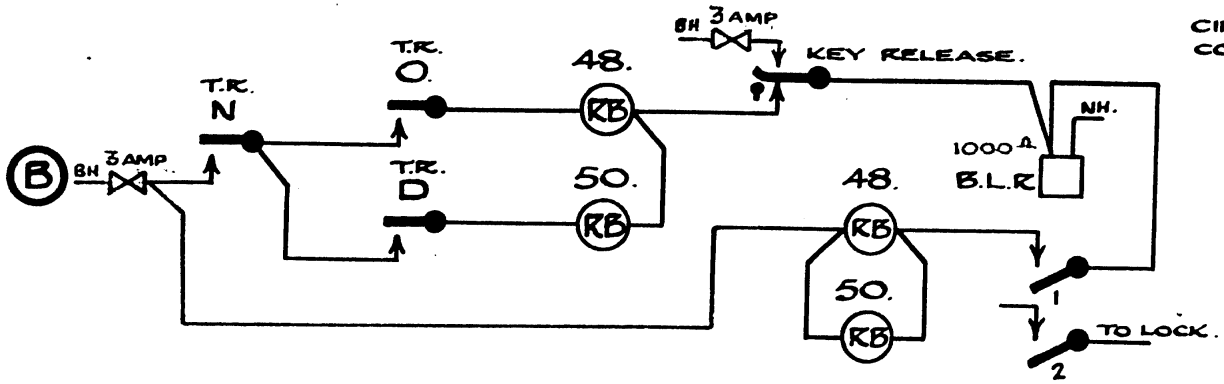

CIRCUIT B. TO BE USED WHEN NO CONTROLLER IS PROVIDED ON LEVER 44.

BANNER SIGNALS.

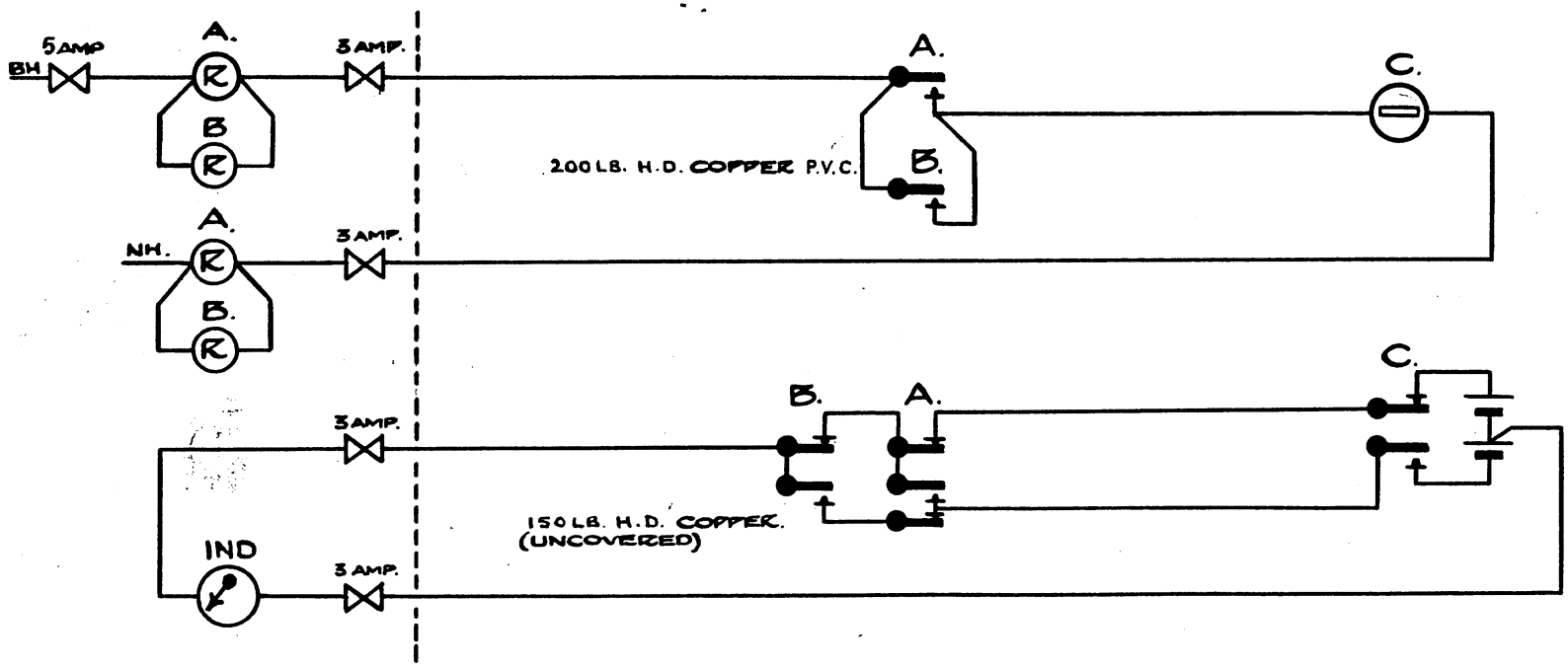

BANNER SIGNALS.

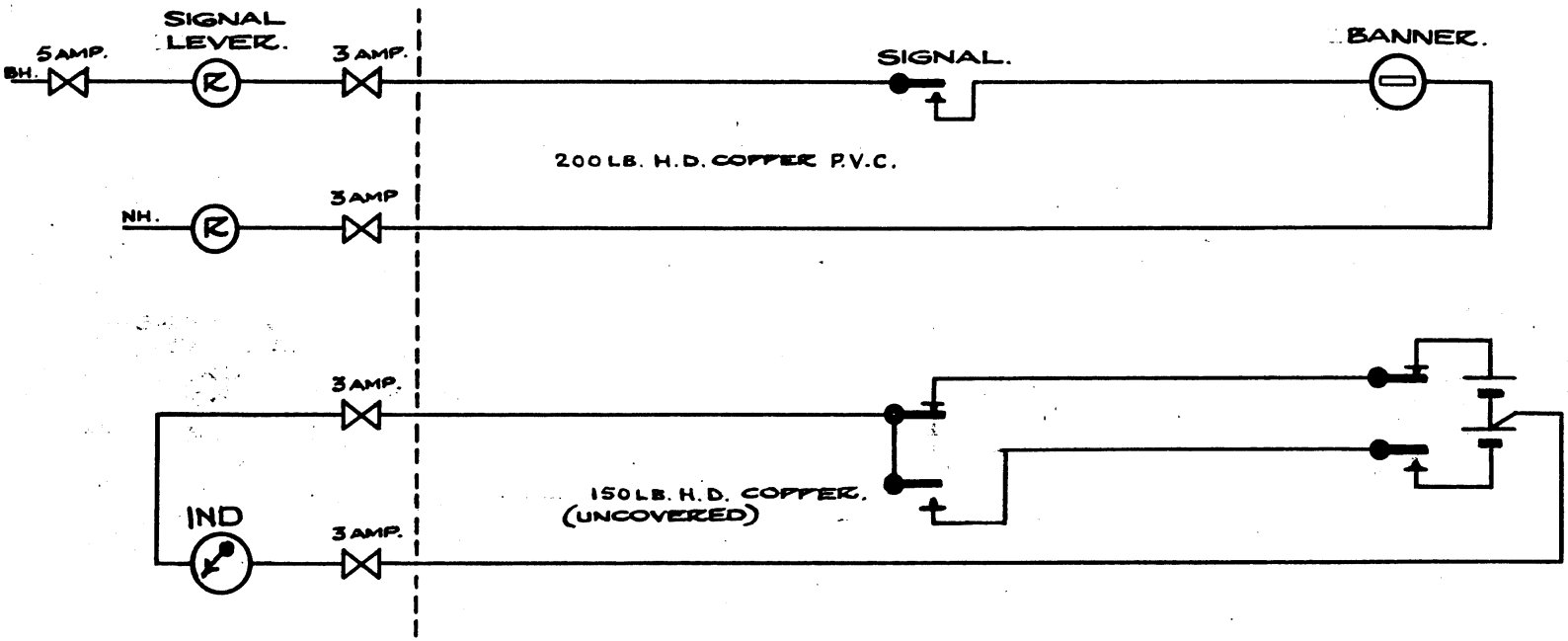

BANNER SIGNALS.

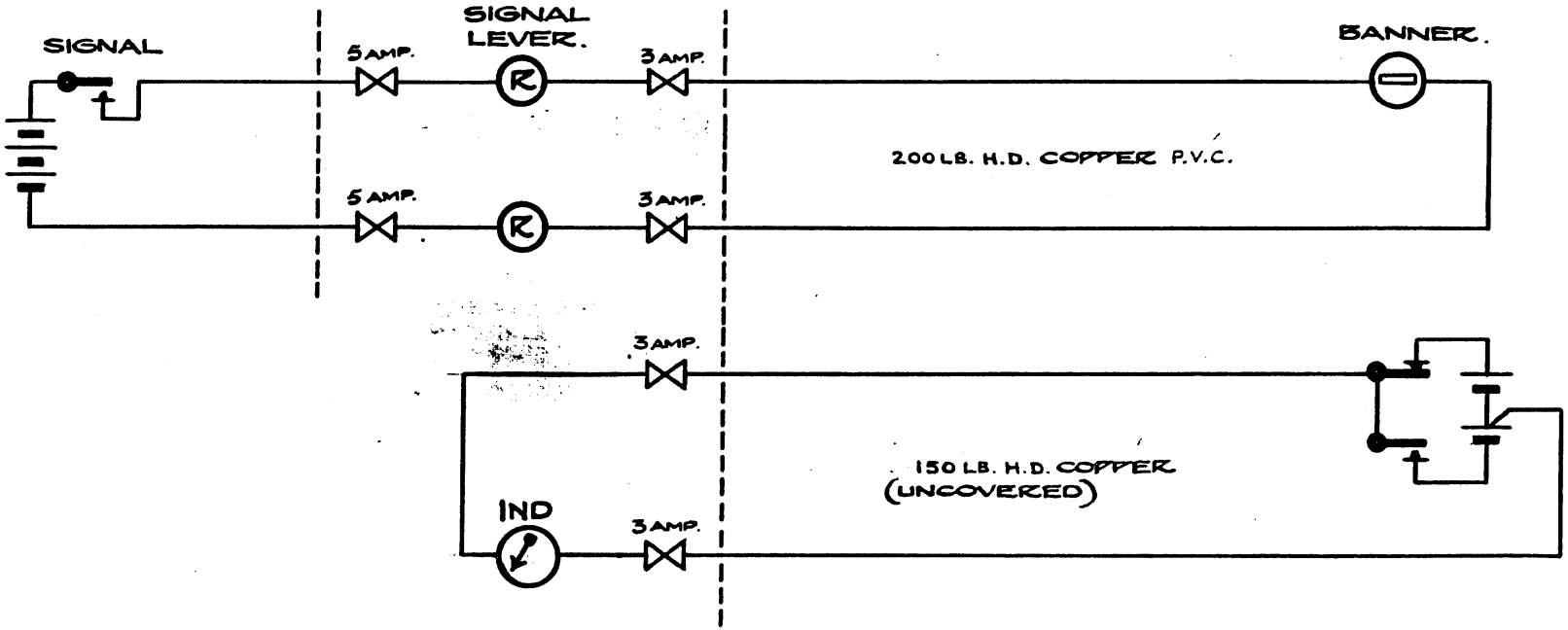

BANNER SIGNALS.

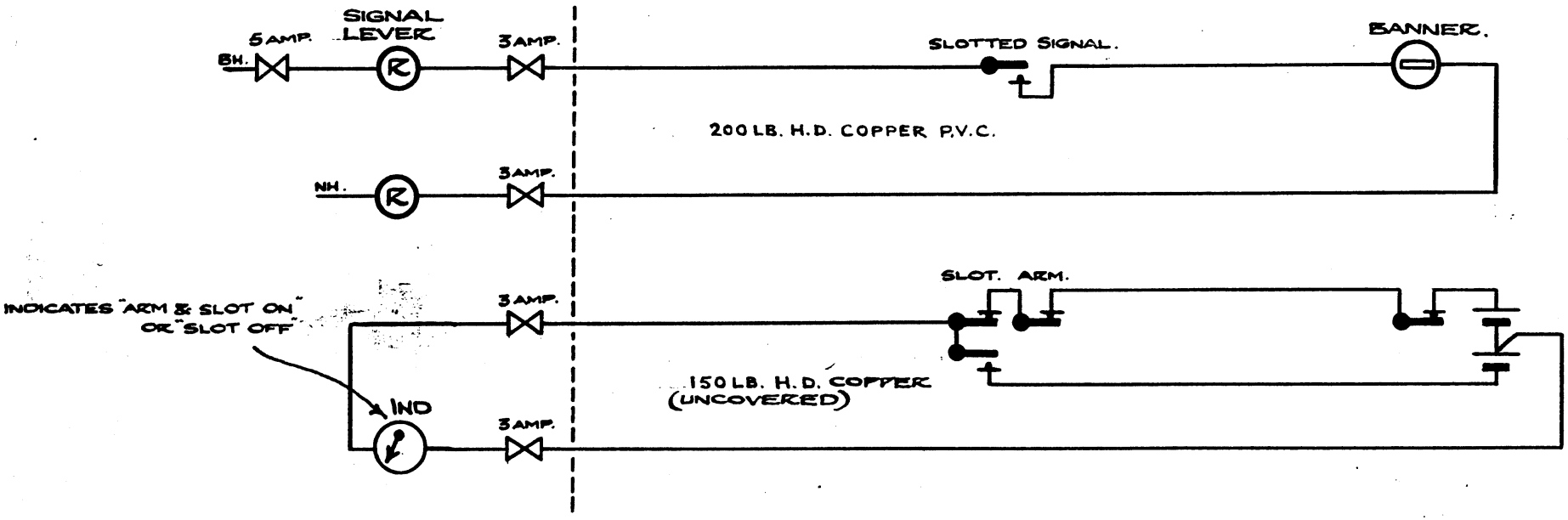

BANNER OPERATION & ARM & BANNER REPEATER.

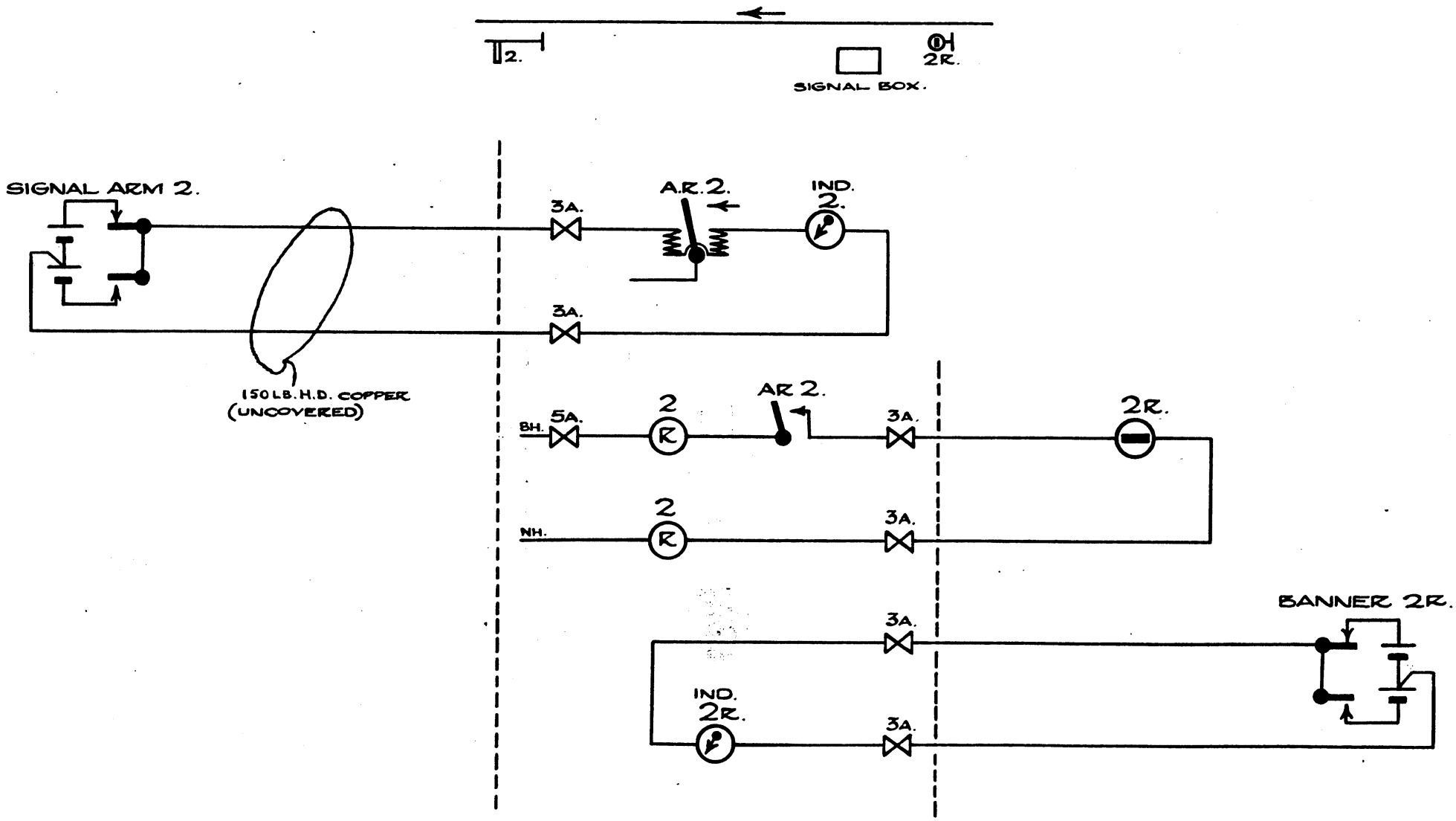

ARM REPEATERS.

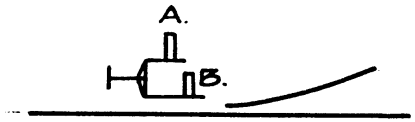

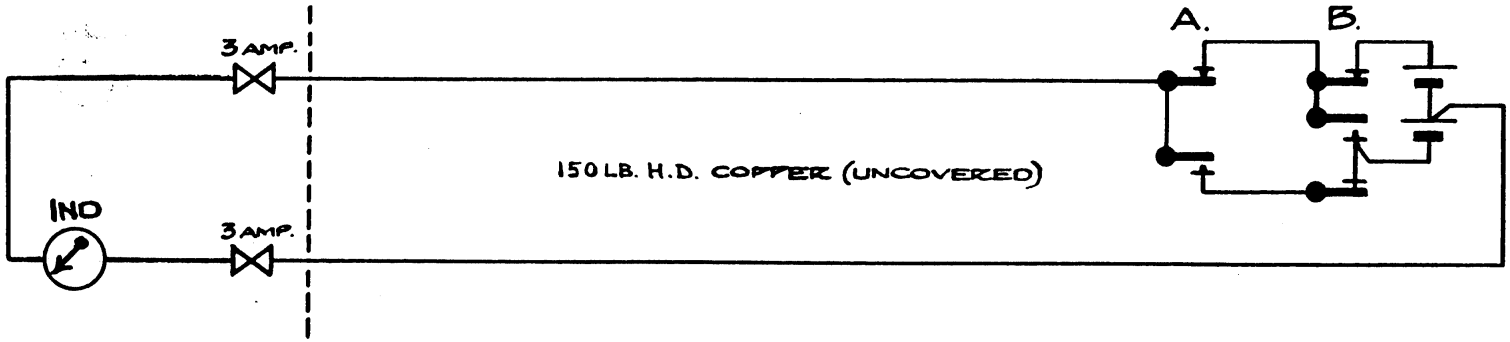

TWO SIGNALS ON ONE REPEATER.

ARM REPEATERS.

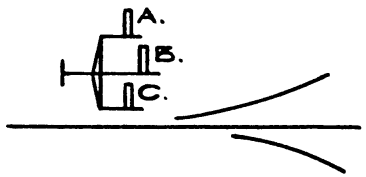

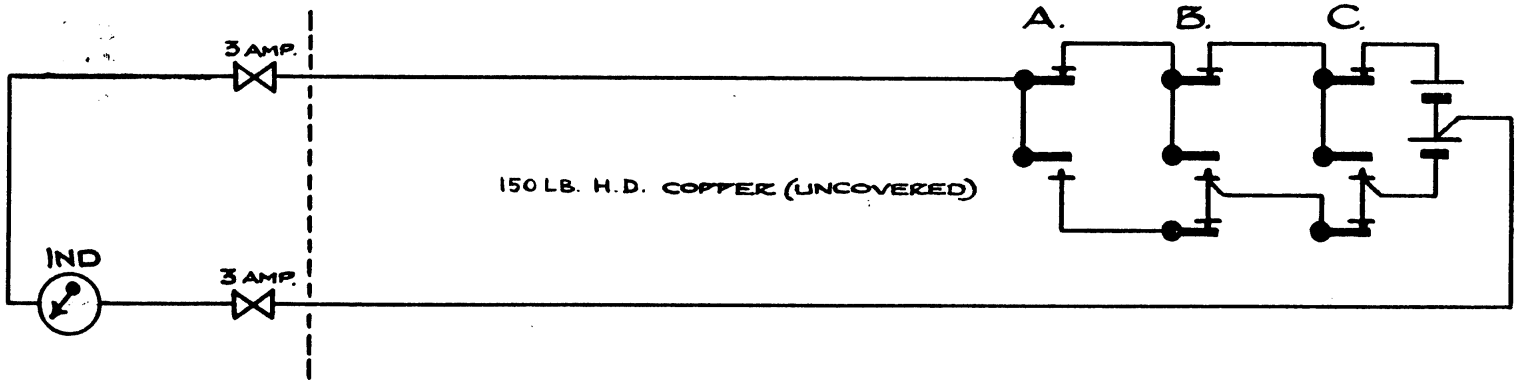

THREE SIGNALS ON ONE REPEATER.

E99 - 26

ARM REPEATER

FOR USE IN SPECIAL CASES WHERE IT IS ECONOMICAL.

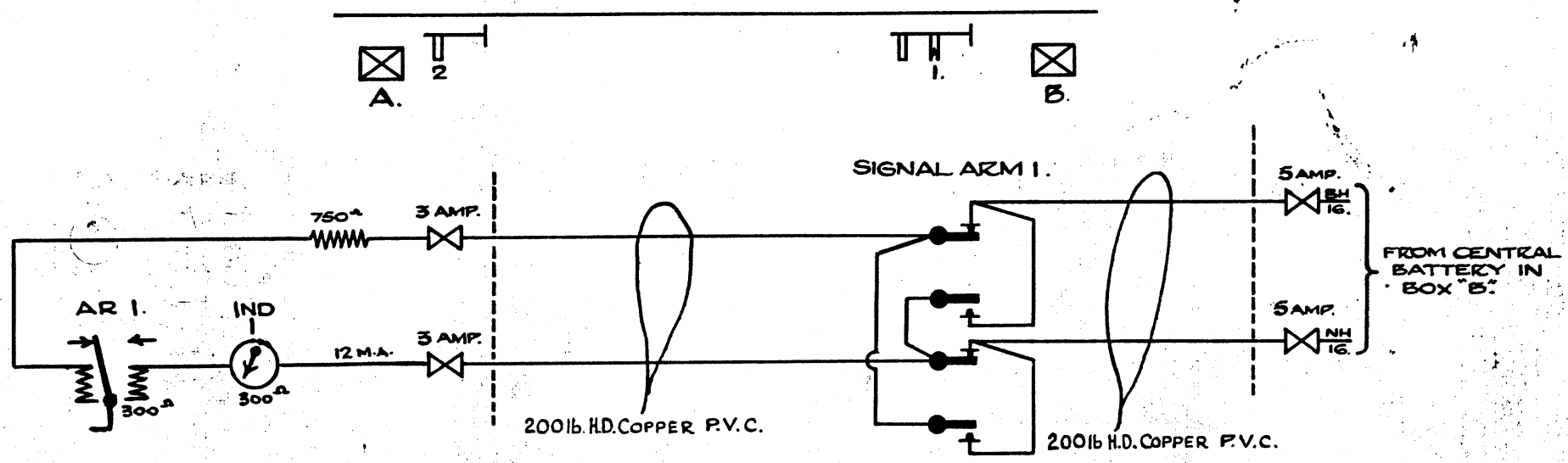

E.F. BAR CIRCUIT.

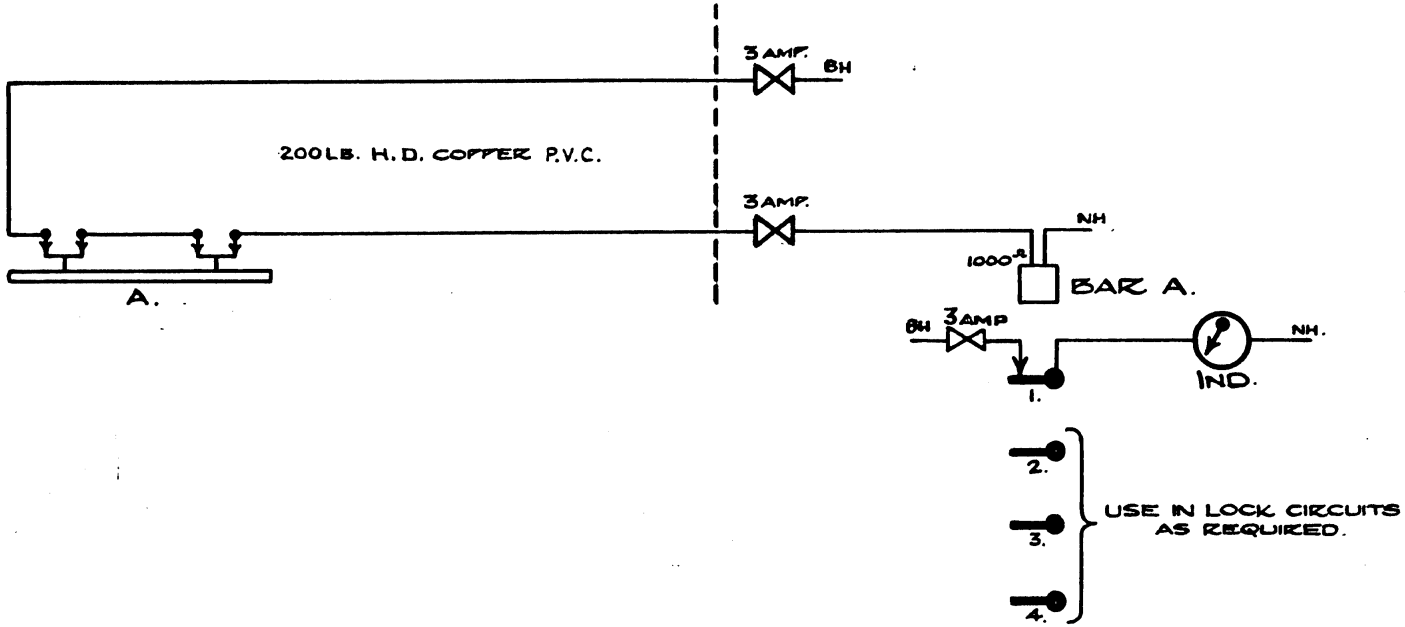

ABOVE CIRCUIT TO BE USED FOR EITHER BAR "CLEAR" OR "OCCUPIED."

ARM PROVING CIRCUIT.

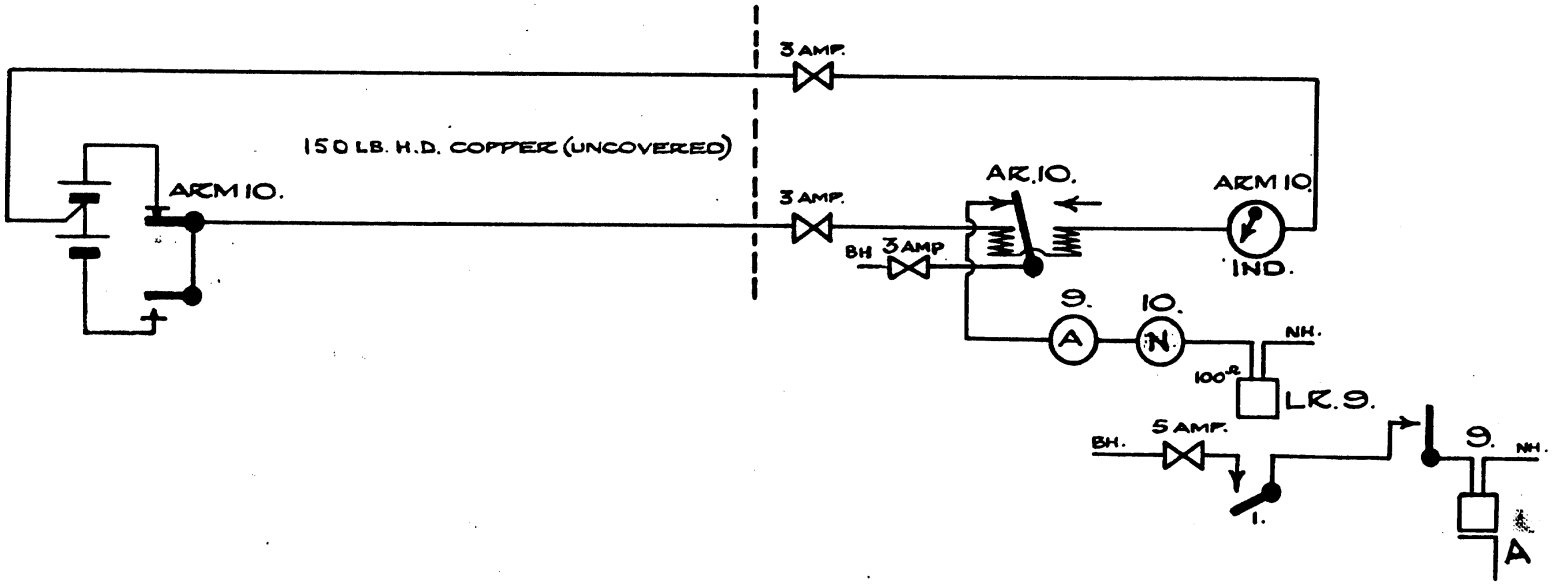

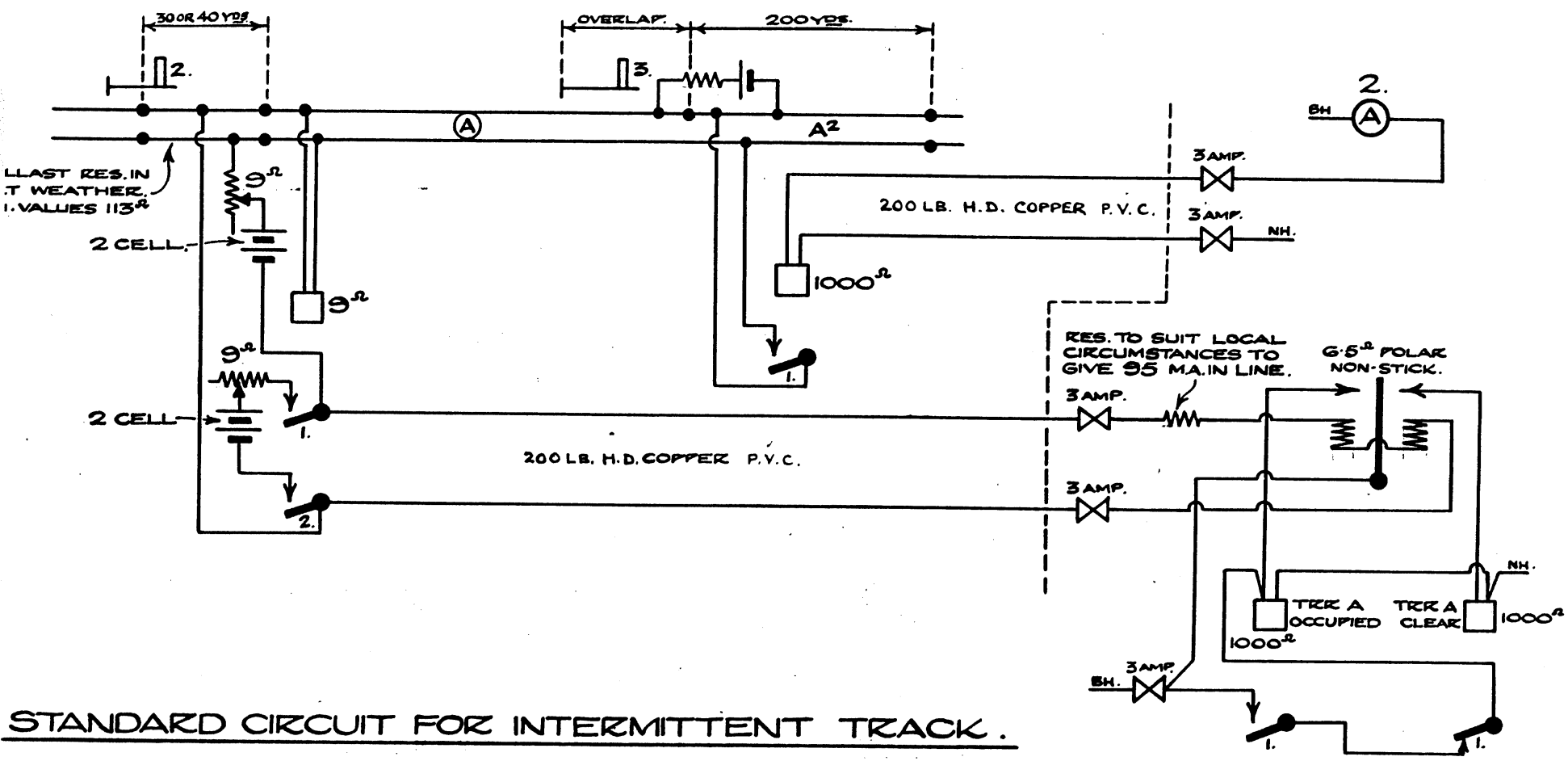

STANDARD CIRCUIT FOR INTERMITTENT TRACK.

SIEMENS POLAR RELAY RS. 134 (NON-STICK)
RES. 6·5Ω
MIN. F.U. 48 M.A.
WORKING F.U. 107 M.A.
RELEASE 40 M.A.

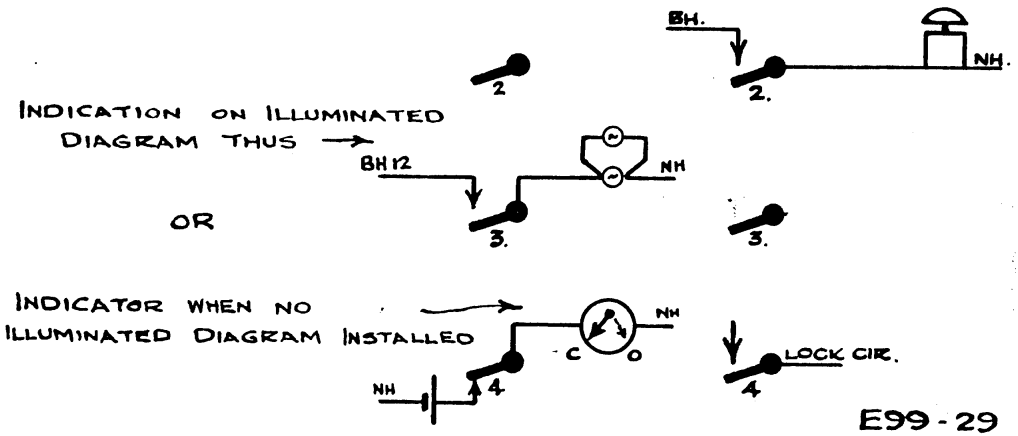

E99 - 29

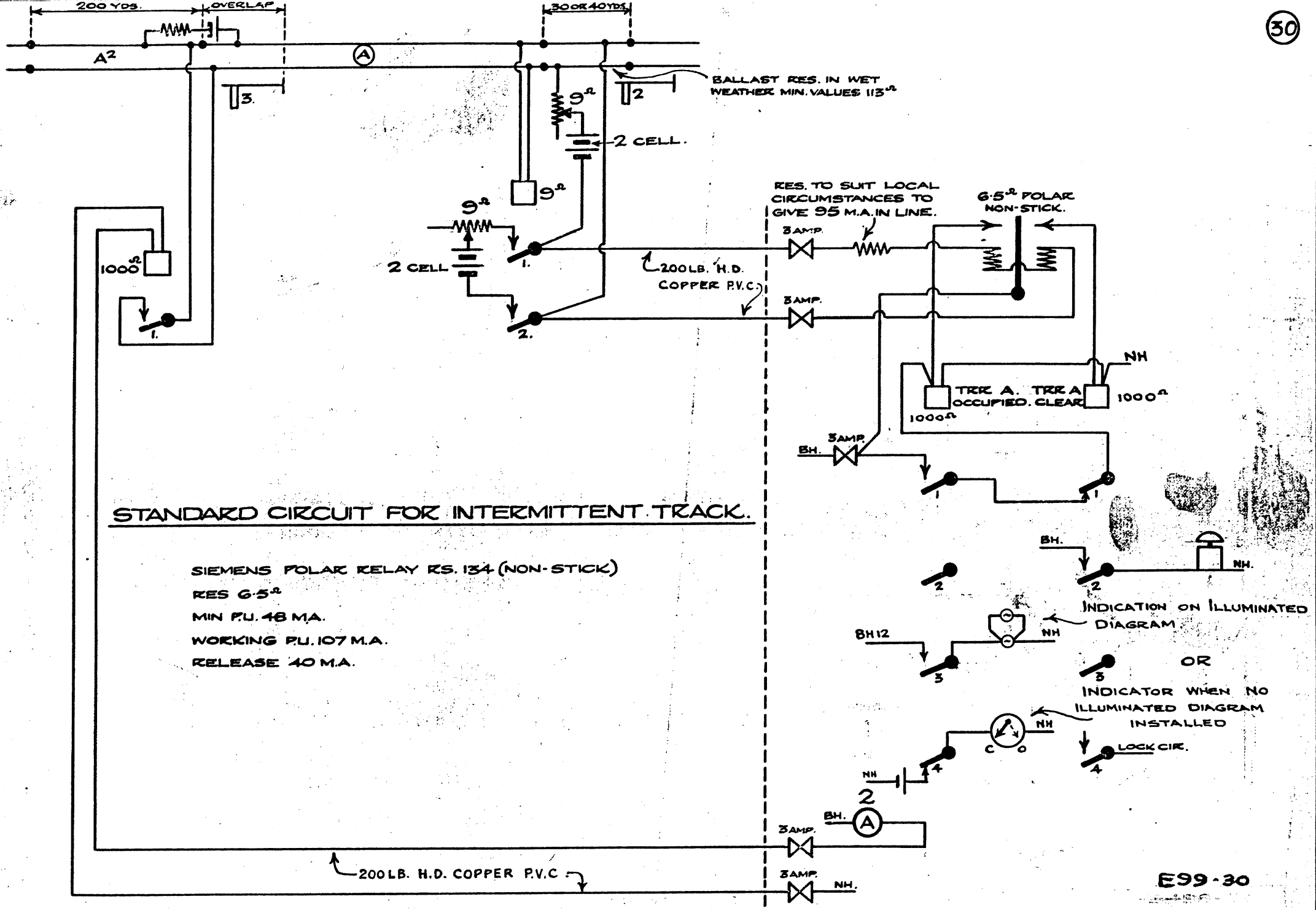

STANDARD CIRCUIT FOR INTERMITTENT TRACK.

SIEMENS POLAR RELAY RS. 134 (NON-STICK)
RES 6·5Ω
MIN P.U. 48 M.A.
WORKING P.U. 107 M.A.
RELEASE 40 M.A.

E99·30

ELECTRICALLY OPERATED DISTANT SIGNALS.

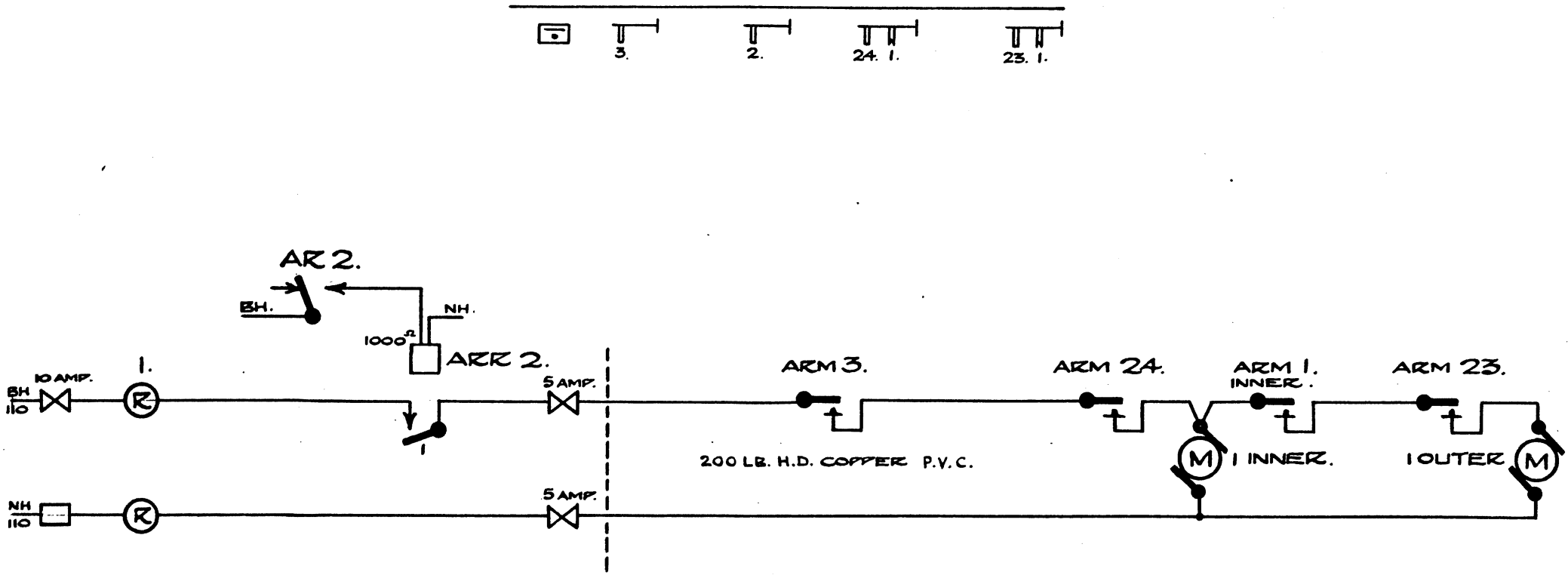

LEVERS 23. & 24. TO BE INSERTED IN THE CIRCUIT IF THE LINE WIRES OPERATING No. 1. EXTEND BEYOND THE SIGNAL BOX FROM WHICH 23 & 24 ARE CONTROLLED.

ELECTRICALLY OPERATED DISTANT SIGNALS.

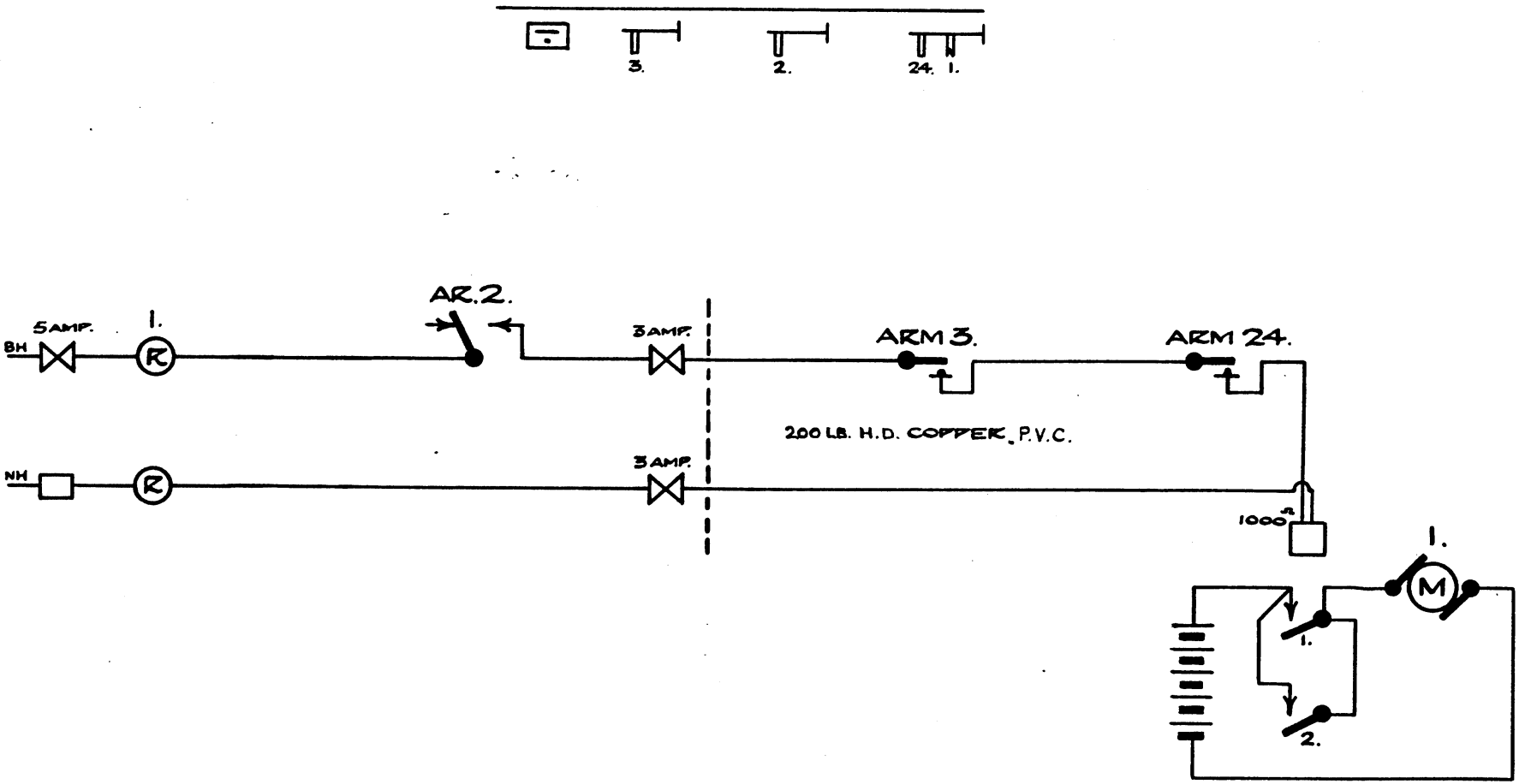

LEVER 24. TO BE INSERTED IN THE CIRCUIT IF THE LINE WIRES OPERATING Nº 1. EXTEND BEYOND THE SIGNAL BOX FROM WHICH 24. IS CONTROLLED.

AUDIBLE WARNING OF TRAIN LEAVING TRACK CIRCUIT

AS AT SWANLEY

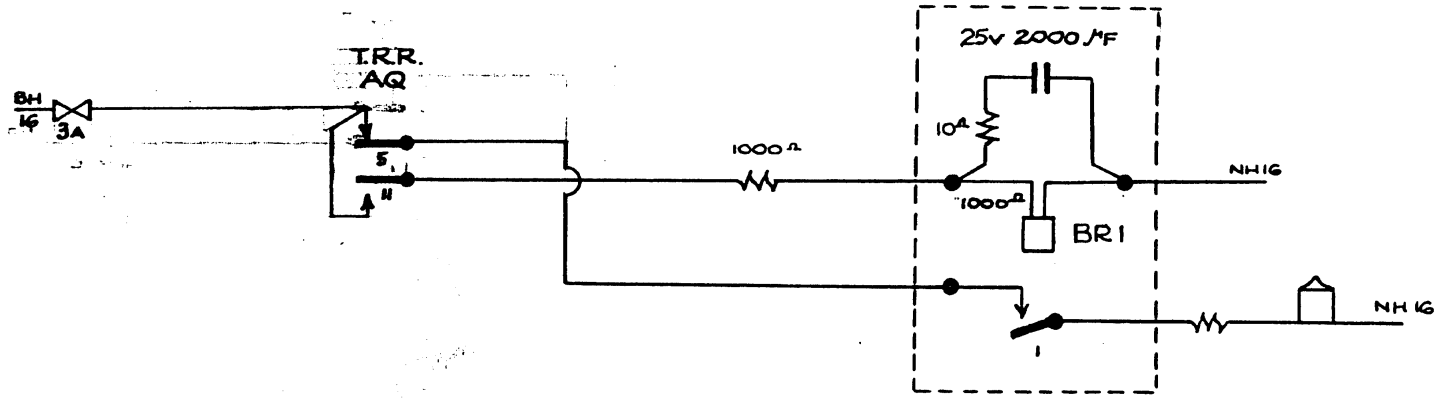

E99-33

NOMENCLATURE	SYMBOL	NORMAL OPERATING		OF APPARATUS	REQUIRED FOR		
		VOLTS	AMPS		12V	16V	24V
SYX PLUNGER LOCK	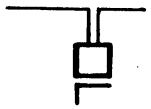	8	0·27	30Ω	10Ω 20w	30Ω 30w	60Ω 30w
THREE POSITION BLOCK COMMUTATOR LOCK	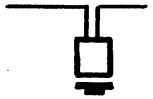	4	0·2	20Ω	40Ω 30w	60Ω 30w	100Ω 30w
SYX COIL LOCK	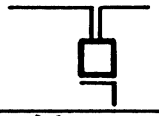	10	0·66	15Ω	—	10Ω 20w	Ø 20Ω 20w
WESTINGHOUSE D.C. LOCK TYPE D4 & DG.	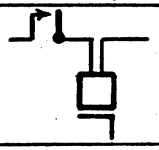	10	1	10Ω	—	—	10Ω 20w
SYX STANDARD CLOSED BLOCK TRAIN ON INDICATOR	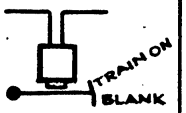	9	0·009	1000Ω	300Ω 20w	700Ω 20w	1500Ω 20w
SYX STANDARD CLOSED BLOCK PLUNGER LOCK	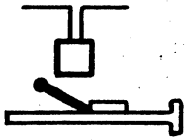	6	0·2	30Ω	30Ω 30w	50Ω 30w	90Ω 30w
SYX STANDARD CLOSED BLOCK LOCK & FREE INDICATOR	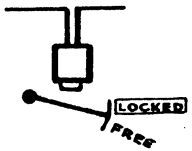	9	0·009	1000Ω	300Ω 20w	700Ω 20w	1500Ω 20w

NOMENCLATURE	SYMBOL	NORMAL OPERATING		OF APPARATUS	REQUIRED FOR		
		VOLTS	AMPS		12V	16V	24V
1000Ω RELAY	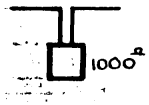	8	0·008	1000Ω	500Ω 20w	1000Ω 20w	2000Ω 20w
100Ω RELAY	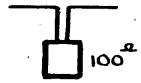	10	·1	100Ω	Ø 20Ω 20w	60Ω 30w	140Ω 30w
300Ω INDICATOR		1·5	·005	300Ω	2000Ω 20w	3000Ω 20w	4500Ω 20w

9 n/1

Ø TWO 10Ω RESISTANCES IN SERIES

E99-34

INTERMEDIATE BLOCK SIGNAL
TRAIN-RUNNING-AWAY INDICATION.

NO SEPARATE OVERLAP TRACK PROVIDED.

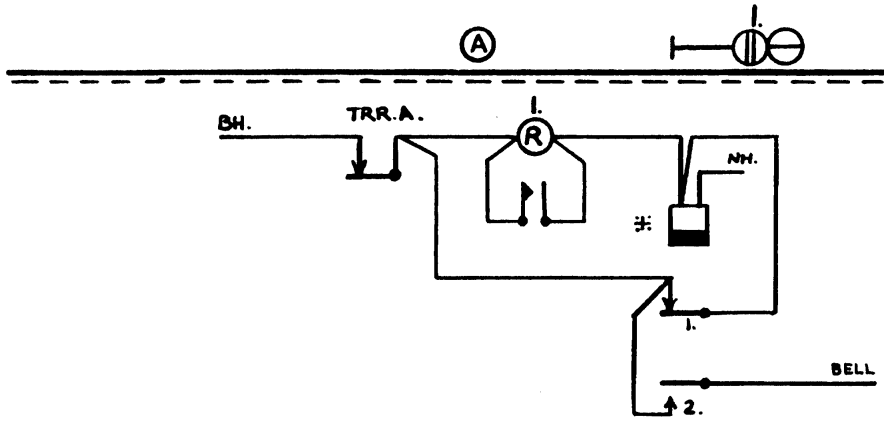

= W.B.S. Co. STYLE J (SLOW ACTING).
2 F/B DEPENDANT CONTACTS.
REF. 8/IL/150. 2000 Ω.
(1 SECOND TIME LAG ON P.U.)

OR W.B.S. Co. STYLE D6 (SLOW ACTING).
2 F. 2 F/B. DEPENDANT CONTACTS.
2000 Ω
(1 SECOND TIME LAG ON P.U.)

SEPARATE OVERLAP TRACK PROVIDED.

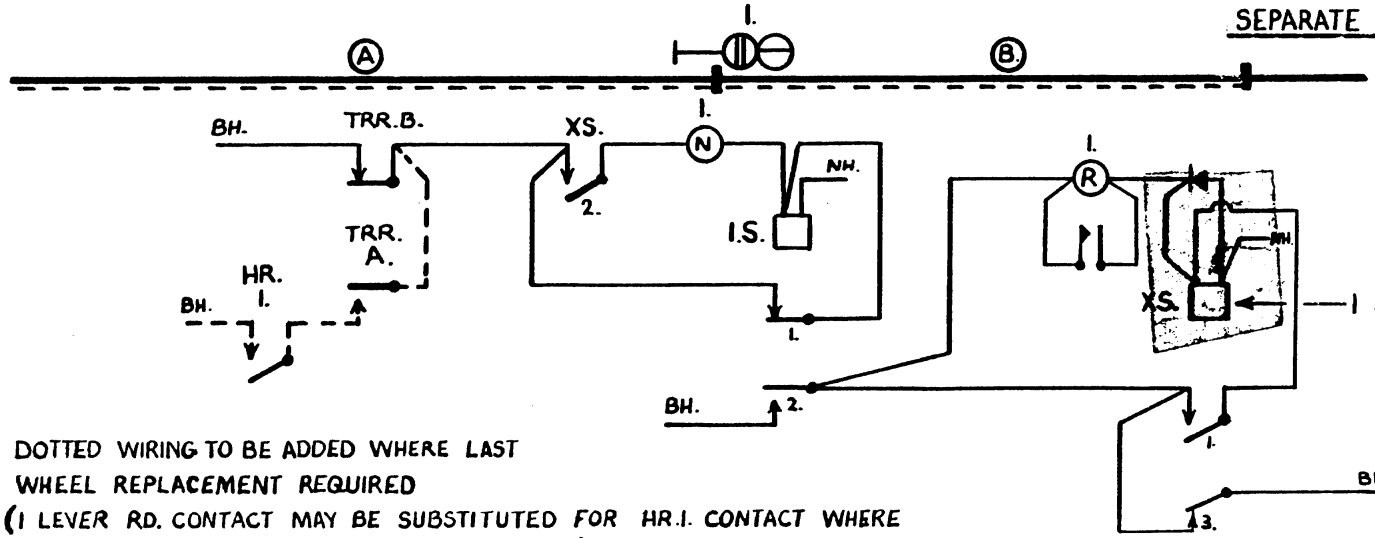

※ DOTTED WIRING TO BE ADDED WHERE LAST WHEEL REPLACEMENT REQUIRED
(1 LEVER RD. CONTACT MAY BE SUBSTITUTED FOR HR.I. CONTACT WHERE SPARE RELAY CONTACTS ARE NOT AVAILABLE).

GUIDING PRINCIPLES FOR A.C. TRACK CIRCUITS ON ELECTRIFIED LINES

MAXIMUM NUMBER OF IMPEDANCE BONDS PER TRACK CIRCUIT:4.
THE AVERAGE SPACING OF NEGATIVE TRACTION BONDS AND IMPEDANCE BONDS TO BE 900YDS. WITH THE PROVISO THAT NO TWO ADJACENT BONDS ARE MORE THAN 1,200YDS. APART.

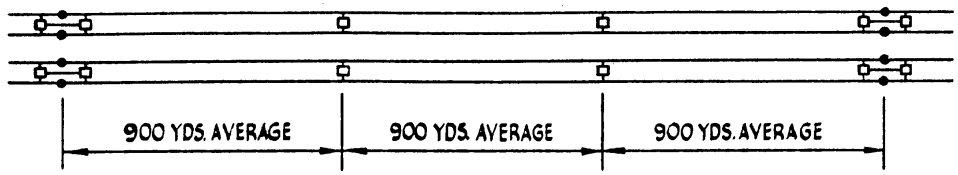

IN POINT AND CROSSING ZONES SINGLE RAIL TRACK CIRCUITS MAY EXTEND WHERE NECESSARY, ALONG PLAIN LINE FOR A DISTANCE UP TO, BUT NOT EXCEEDING, 100YDS.
IN THE ILLUSTRATION, TRACK CIRCUIT 'A' MUST THEREFORE BE DOUBLE RAIL BUT 'B' MAY BE SINGLE RAIL.

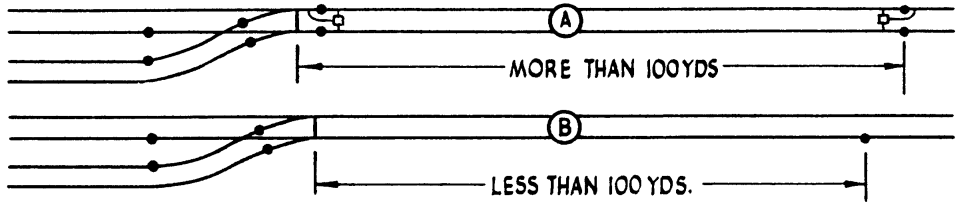

INSULATED BLOCK JOINTS, WHERE PRACTICABLE, TO BE IN CROSSOVER CONNECTIONS AS IN 'A' AND NOT 'B'

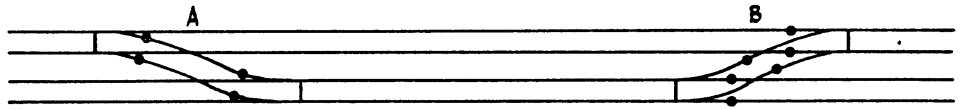

NOTES

(1.) IMPEDANCE BONDS MUST BE PROVIDED OPPOSITE TO SUB-STATIONS & TRACK PARALLELING HUTS WHERE THERE ARE DOUBLE RAIL TRACK CIRCUITS.

(2) SINGLE RAIL TRACK CIRCUITS ARE USUALLY ACCEPTABLE ON TERMINAL PLATFORM ROADS.

(3.) SINGLE RAIL TRACK CIRCUITS SHOULD BE ARRANGED SO FAR AS IS PRACTICABLE, SO THAT THE TRACK CIRCUIT RAIL IS NOT ADJACENT TO A CONDUCTOR RAIL.

AWS BR SYSTEM.

MECHANICALLY OPERATED SEMAPHORE DISTANT SIGNAL.
(POWER SUPPLY AVAILABLE)

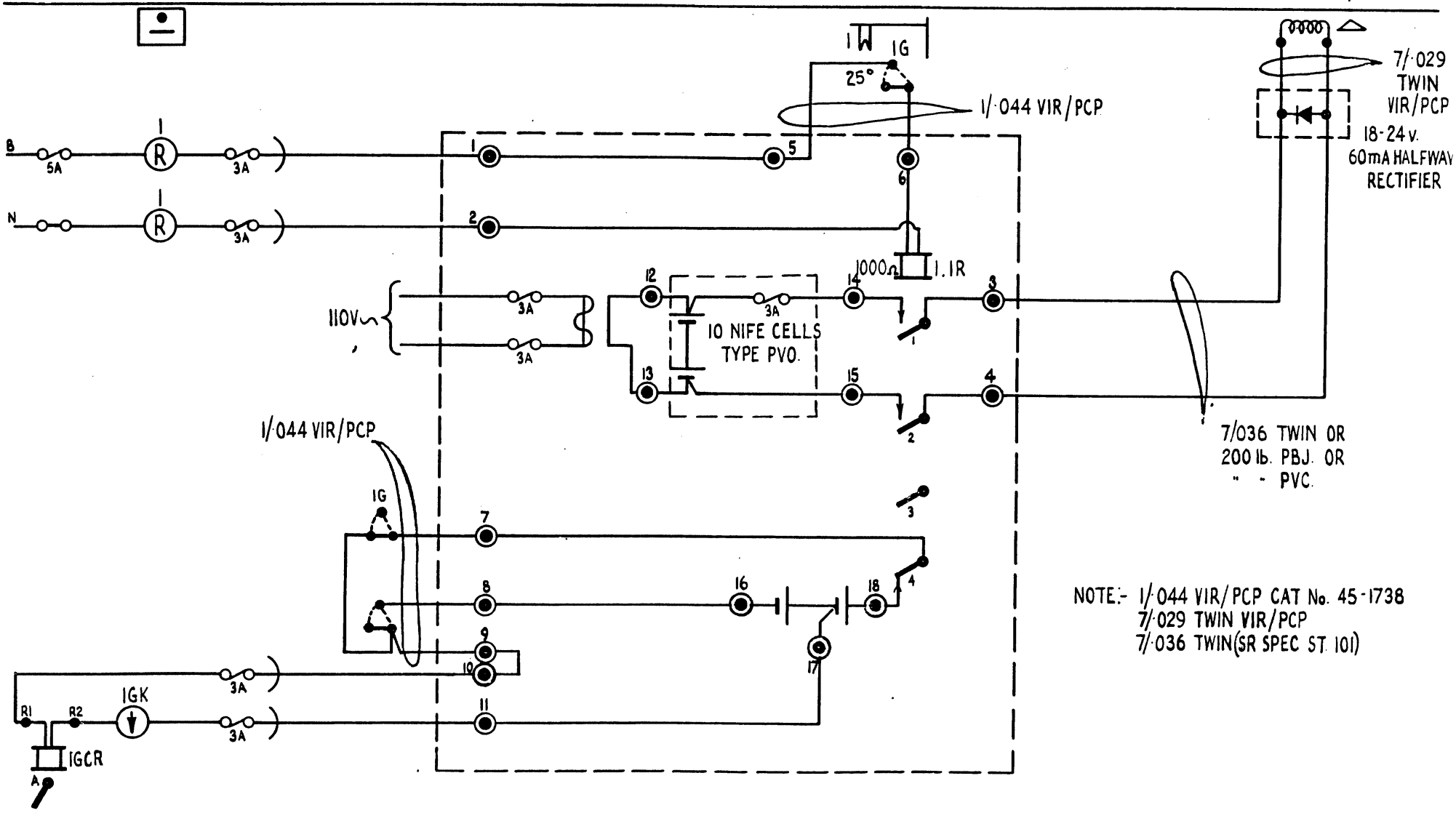

A.W.S. BR SYSTEM

MECHANICALLY OPERATED DISTANT SIGNAL
(NO POWER SUPPLY AVAILABLE)

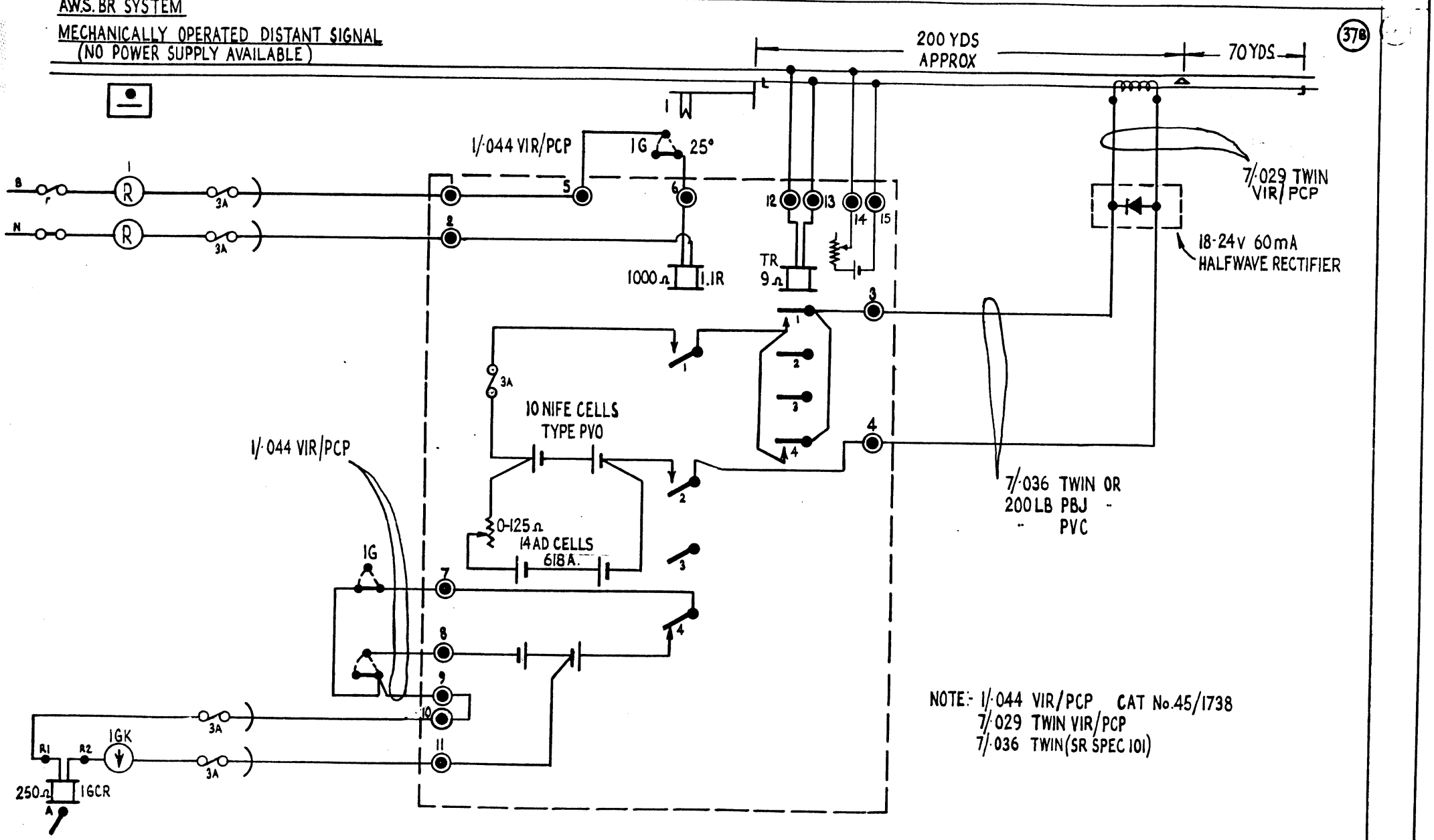

NOTE:- 1/·044 VIR/PCP CAT No.45/1738
7/·029 TWIN VIR/PCP
7/·036 TWIN (SR SPEC 101)

E99-37B

ELECTRICALLY OPERATED SEMAPHORE DISTANT SIGNAL
(POWER SUPPLY AVAILABLE)

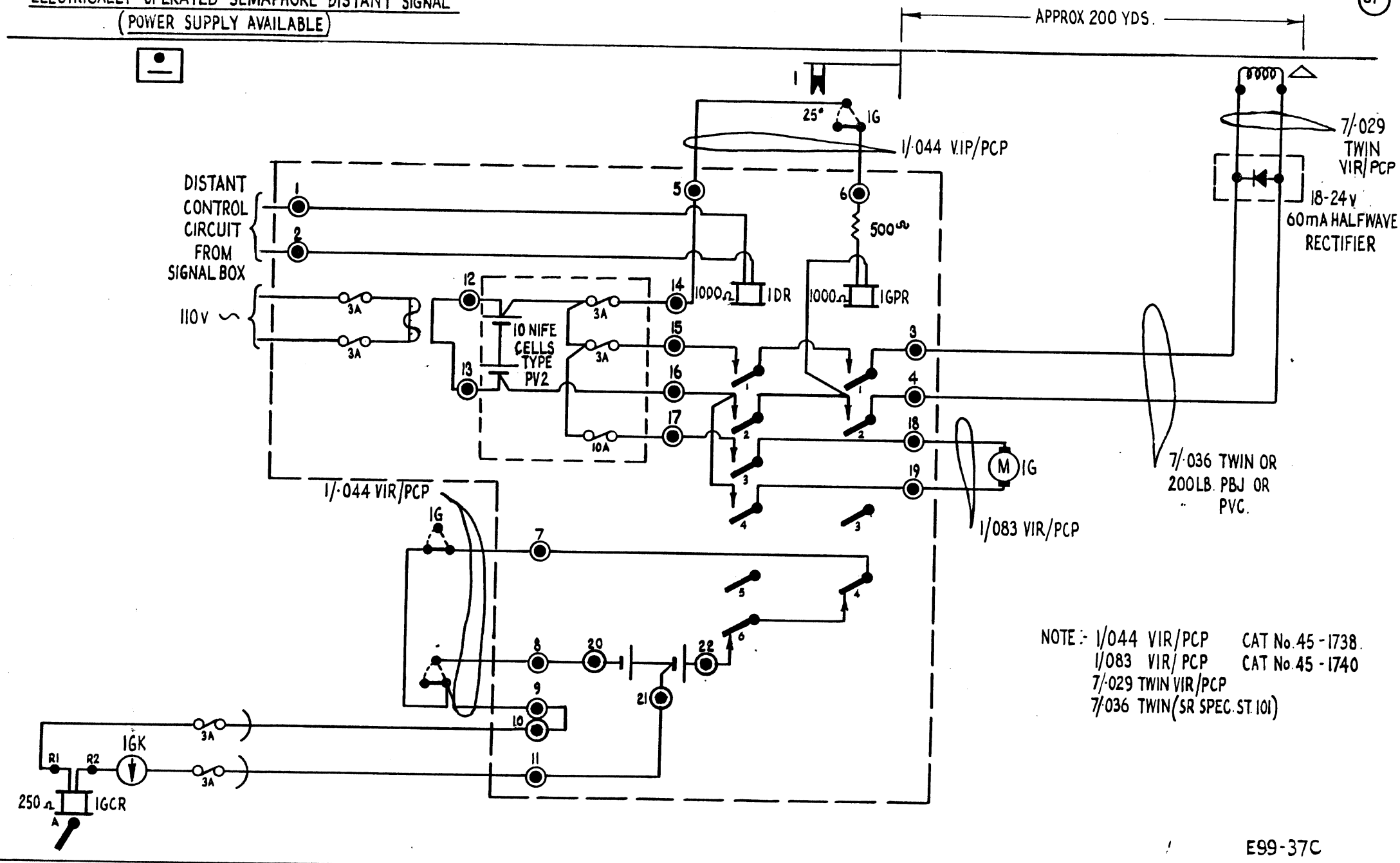

NOTE :- 1/044 VIR/PCP CAT No. 45-1738.
1/083 VIR/PCP CAT No. 45-1740
7/029 TWIN VIR/PCP
7/036 TWIN (SR SPEC. ST. 101)

A.W.S. B.R. SYSTEM

STANDARD DIAGRAM

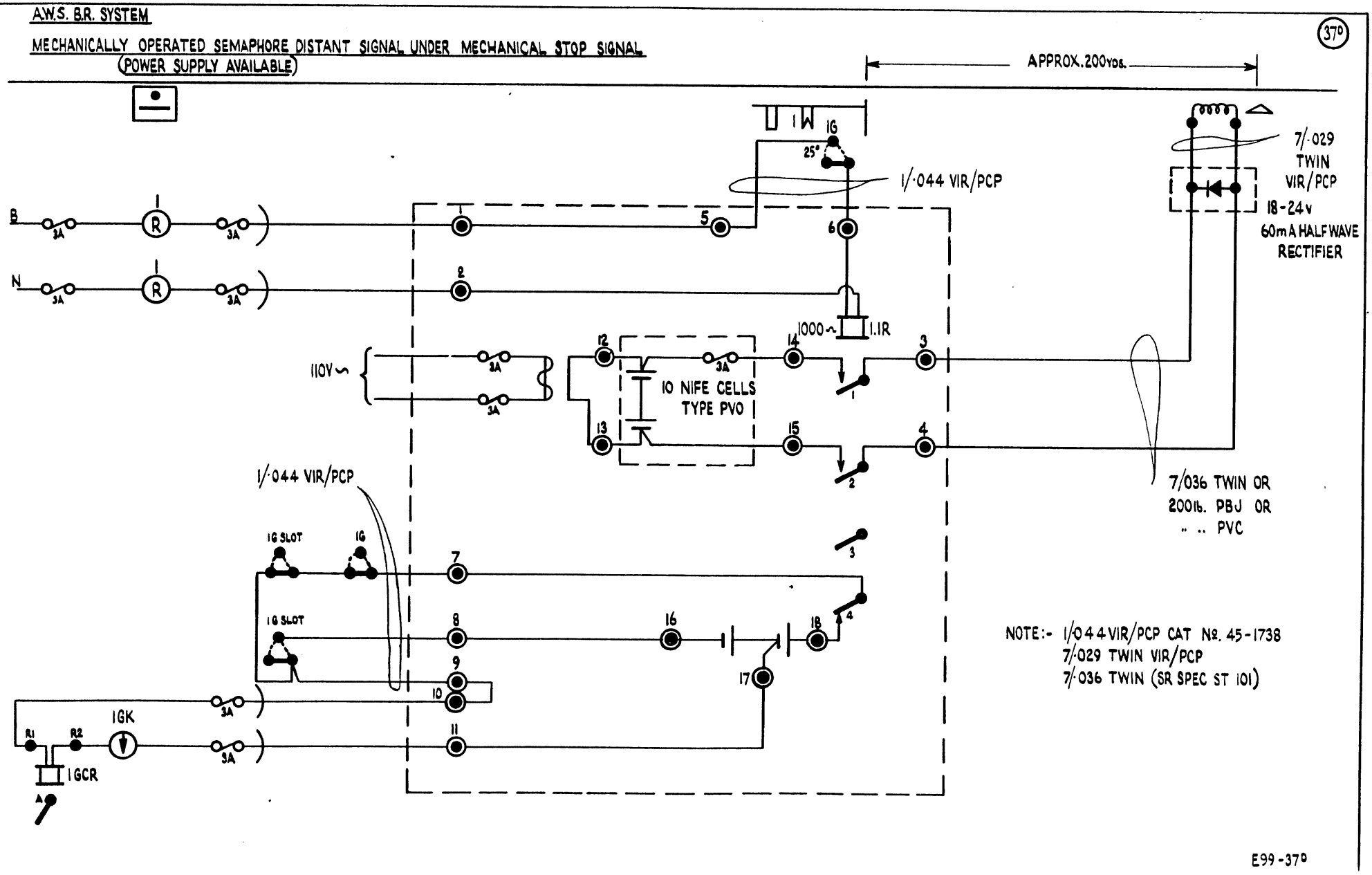

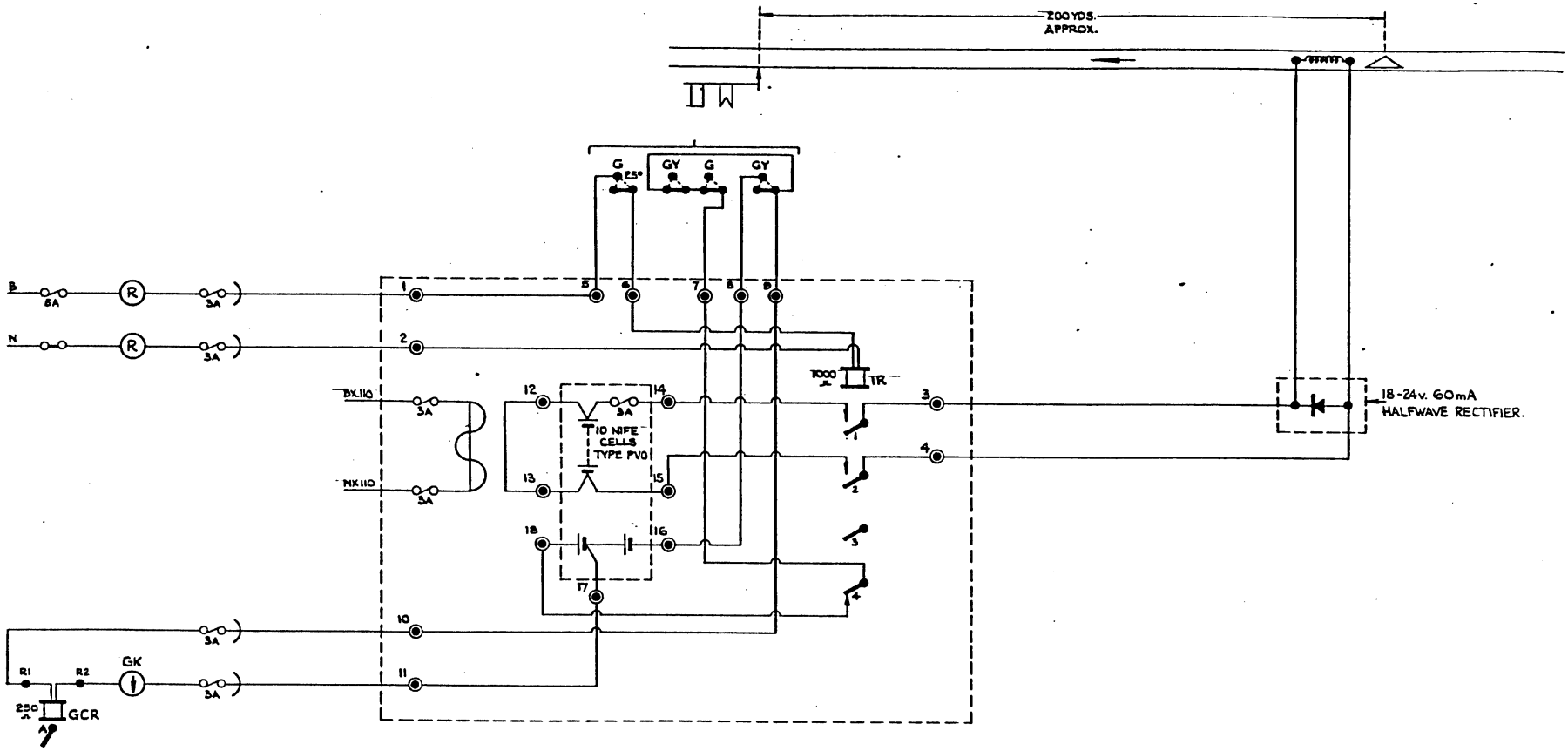

DRAWN BY				SIGNAL No._____	BRITISH RLYS. (Southern Region). WIMBLEDON
TRACED BY				A.W.S. INDUCTOR WIRING.	Chief Signal & Telecommunications Engineer
CHECKED BY					DATE
					No.

E95-37D

AWS. BR. SYSTEM

ELECTRICALLY OPERATED SEMAPHORE DISTANT SIGNAL UNDER MECHANICAL STOP SIGNAL.
(POWER SUPPLY AVAILABLE)

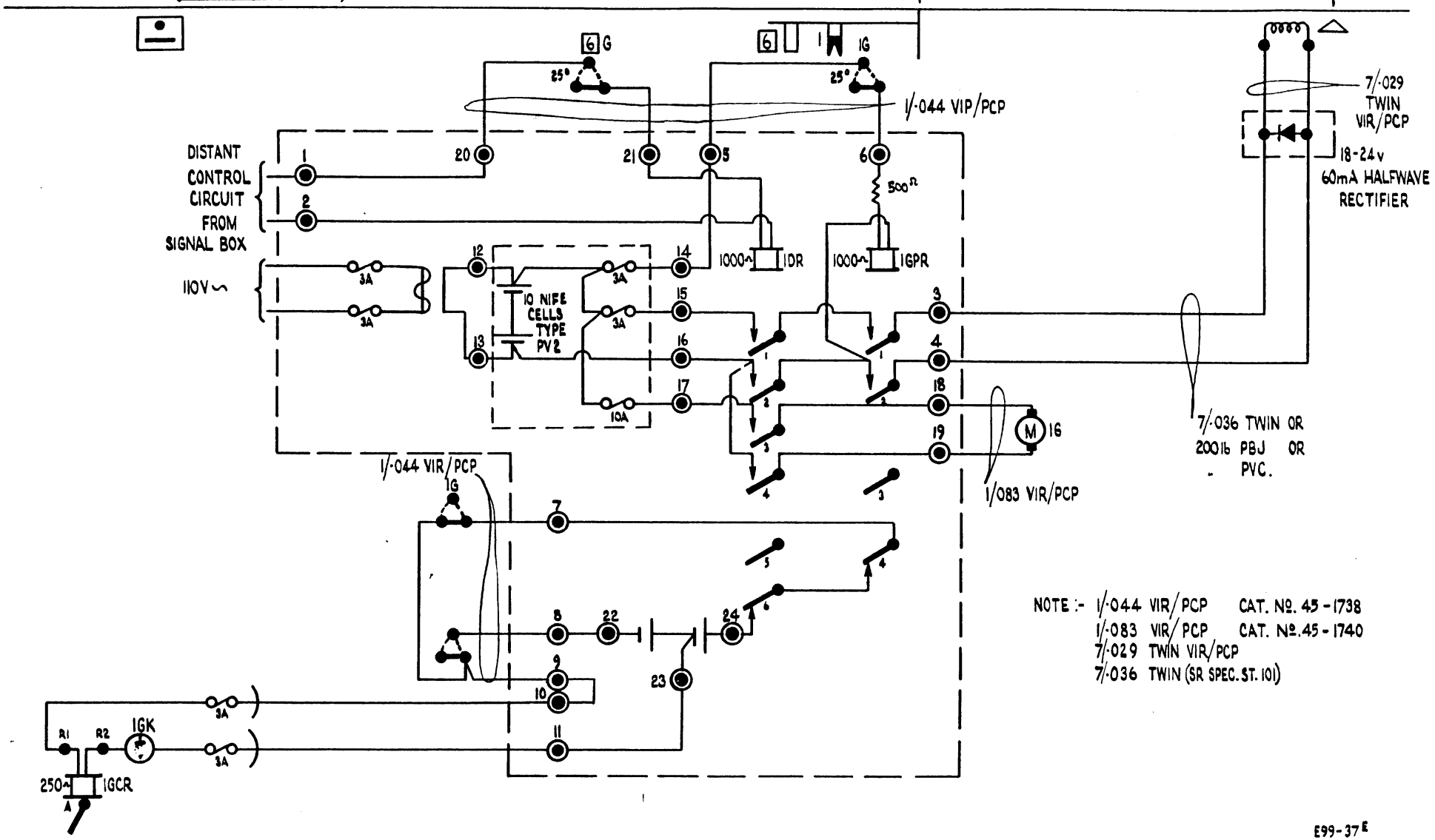

EMERGENCY RELEASE FOR TRACK LOCKED MECHANICAL POINTS.

TYPICAL CASES.

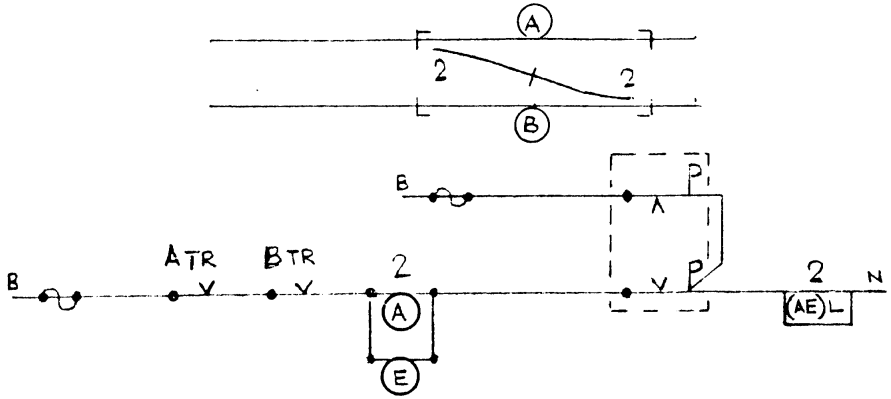

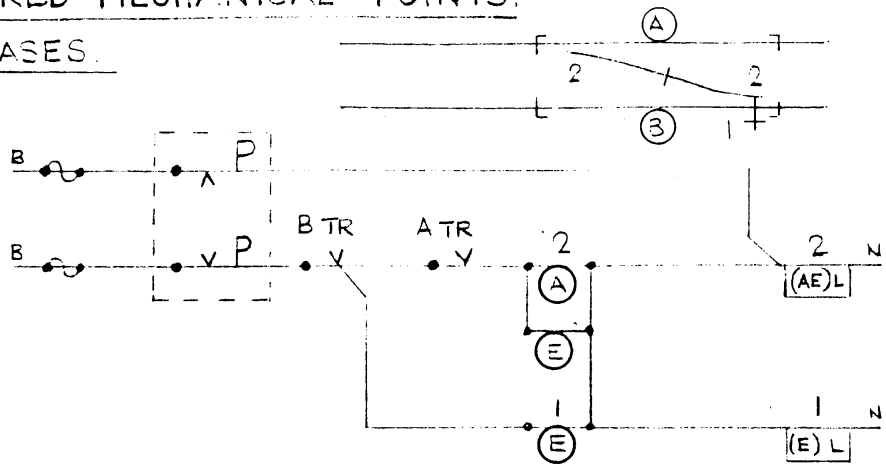

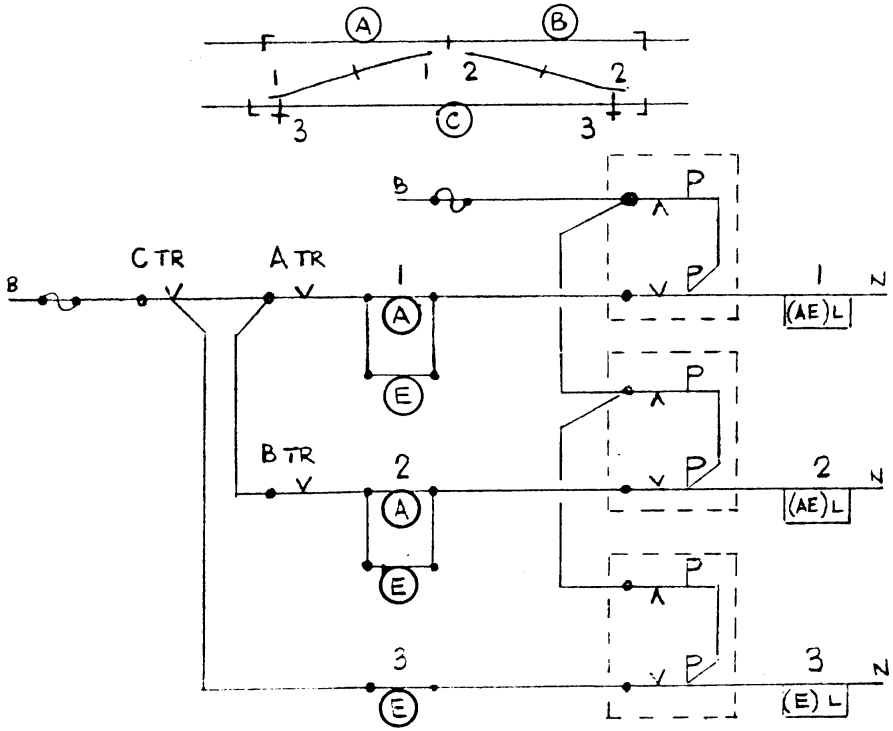

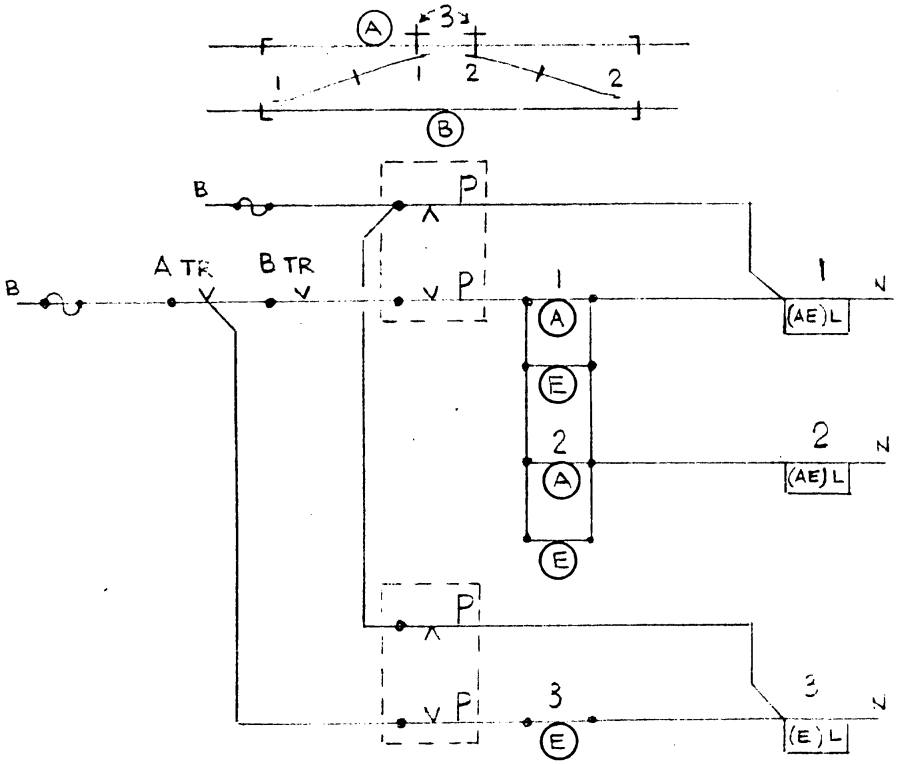

E99-38

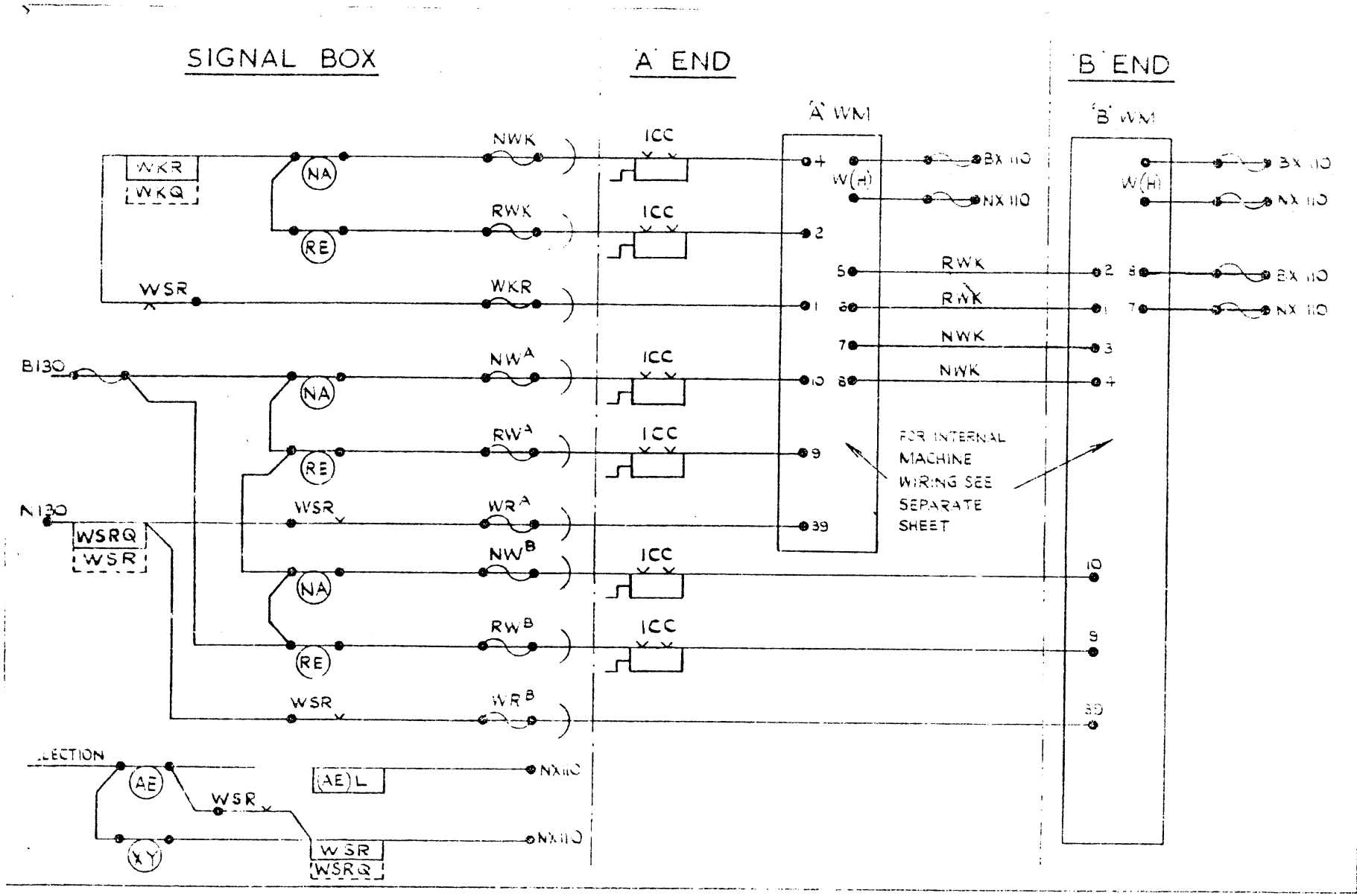

BRITISH RLYS (Southern Region)

Chief Signal & Telecommunications Engineer

DATE

No. E99-38A

STANDARD WIRING DIAGRAM

COMBINED TYPE POINT MACHINES
FOR DOUBLE ENDED POINTS
CONTROLLED FROM A POWER FRAME
& PLUG-IN RELAYS
W.B. & S. CO. STYLE M3

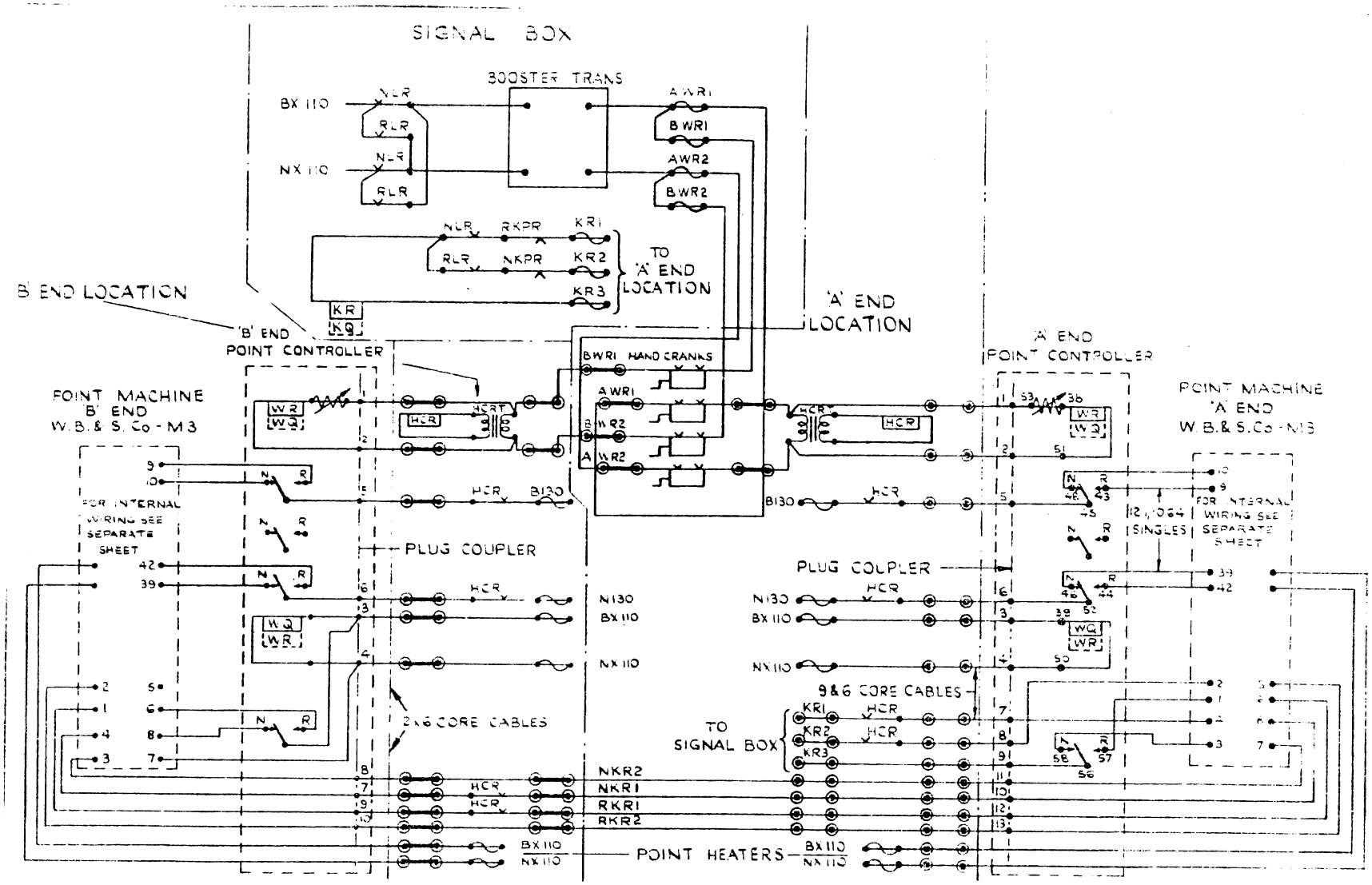

BRITISH RLYS. (Southern Region)

Chief Signal & Telecommunications Engineer

DATE

No. E99-38B

STANDARD WIRING DIAGRAM

COMBINED TYPE POINT MACHINES FOR DOUBLE END POINTS CONTROLLED BY W.B.& S. CO. ROUTE RELAY INTERLOCKING

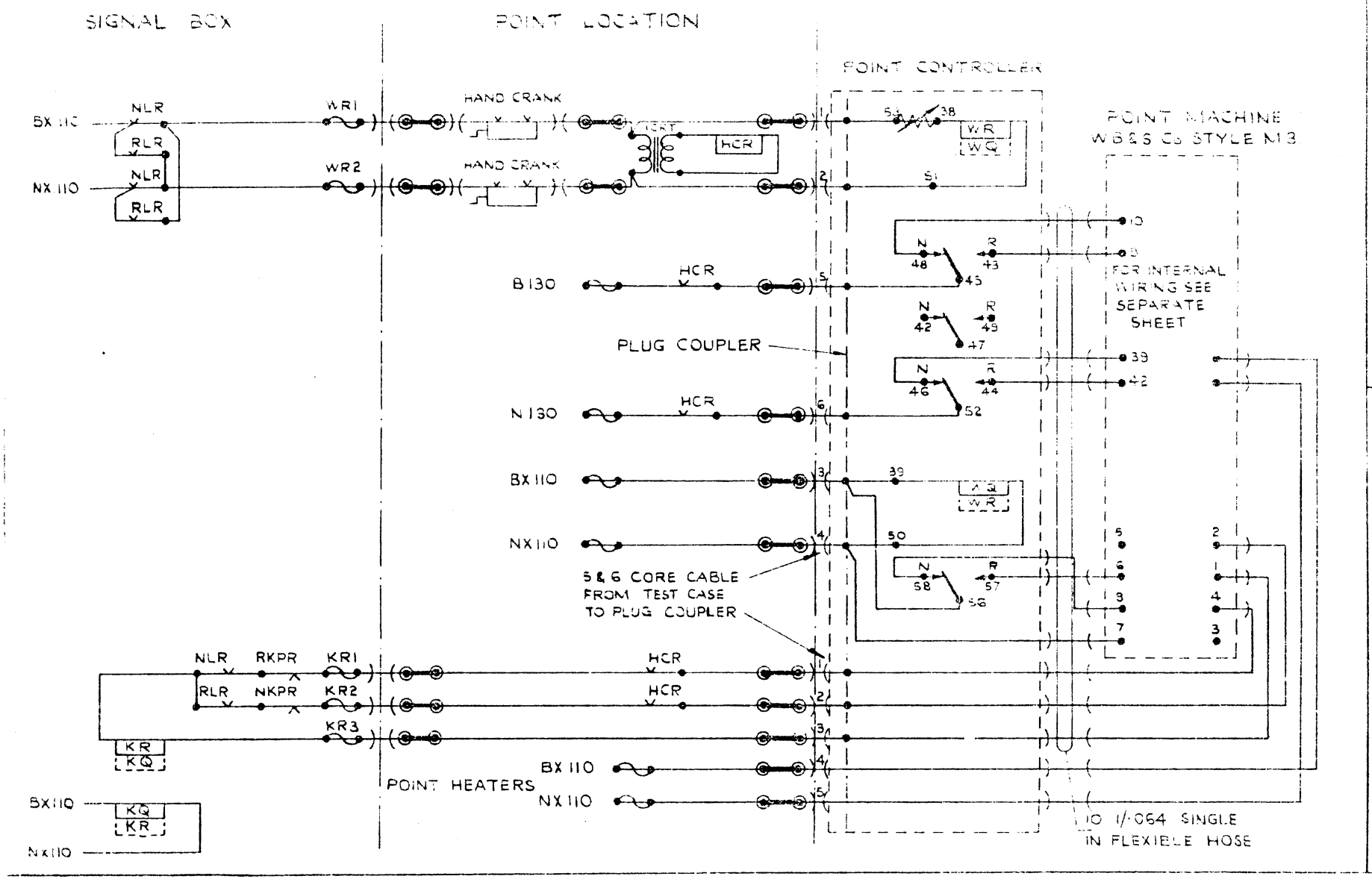

BRITISH RLYS (Southern Region)

Chief Signal & Telecommunications Engineer

DATE

No. E 99-38C

STANDARD WIRING DIAGRAM.

COMBINED TYPE POINT MACHINE

FOR SINGLE ENDED POINTS

CONTROLLED BY W.B.&S.Co. ROUTE

RELAY INTERLOCKING SYSTEM

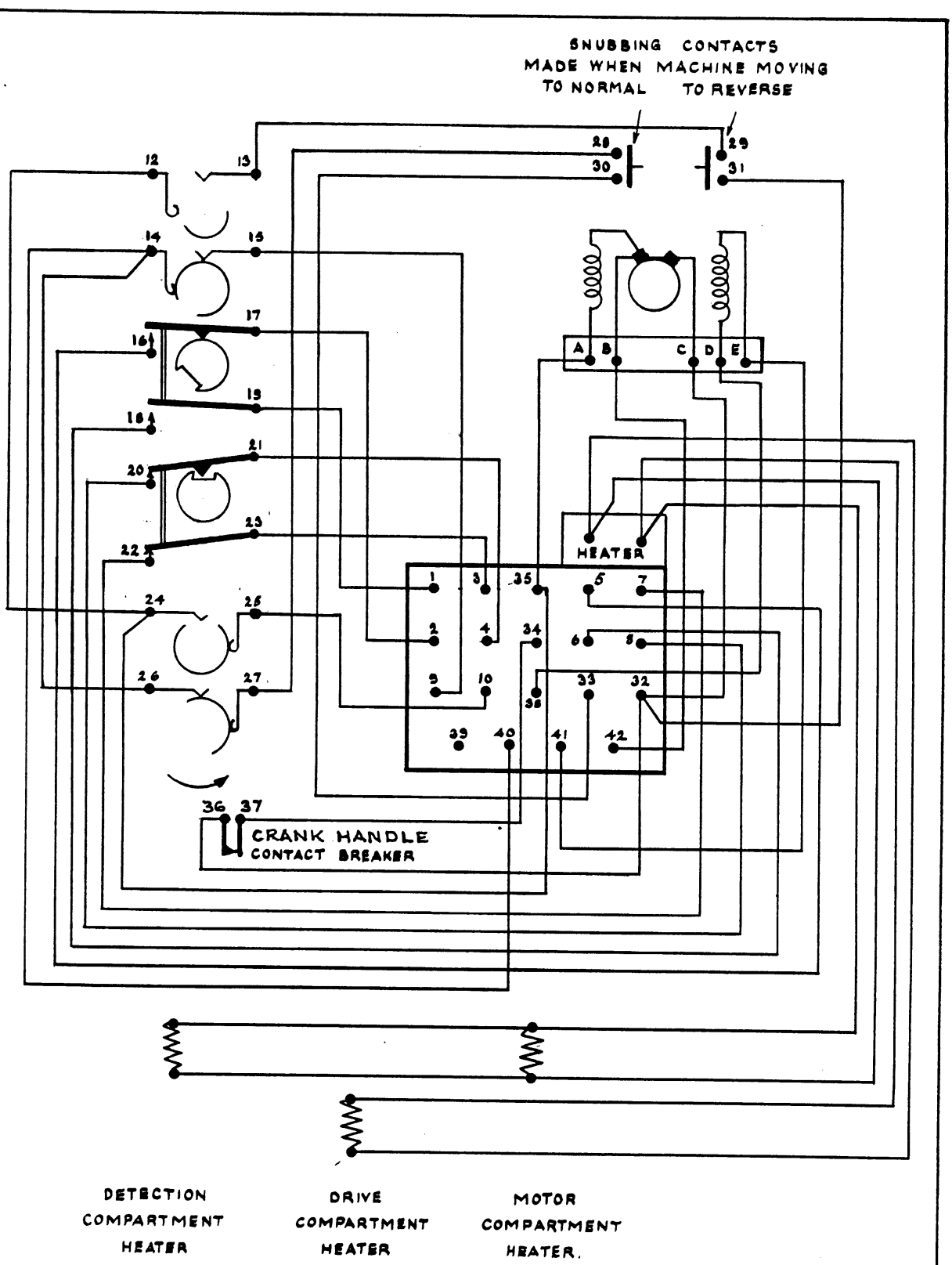

FOR TERMINAL BOARD LINKING SEE E99-38F.

STANDARD WIRING DIAGRAM
COMBINED TYPE POINT MACHINE
INTERNAL WIRING
WB&S. Co. STYLE M.3
RIGHT HAND SWITCH NORMALLY CLOSED

BRITISH RLYS (Southern Region)
SOUTHERN HOUSE CROYDON

Chief Signal & Telecommunications Engineer

DATE

No. E99-38D-1

A4.

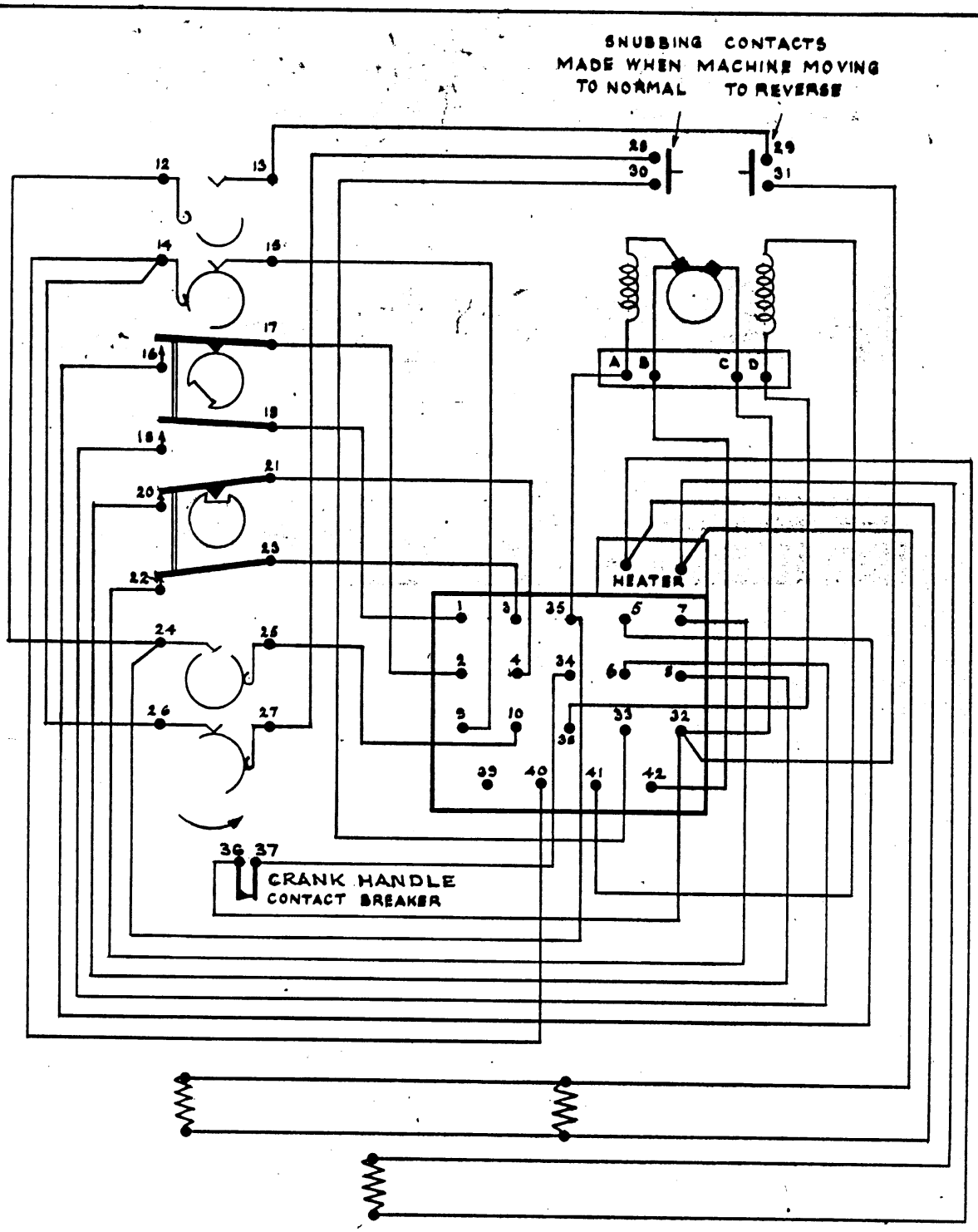

FOR TERMINAL BOARD LINKING SEE E99-38F.

STANDARD WIRING DIAGRAM COMBINED TYPE POINT MACHINE INTERNAL WIRING WB&S. Co. STYLE M.3 RIGHT HAND SWITCH NORMALLY CLOSED	BRITISH RLYS (Southern Region) SOUTHERN HOUSE CROYDON Chief Signal & Telecommunications Engineer DATE No. E99-38D-2

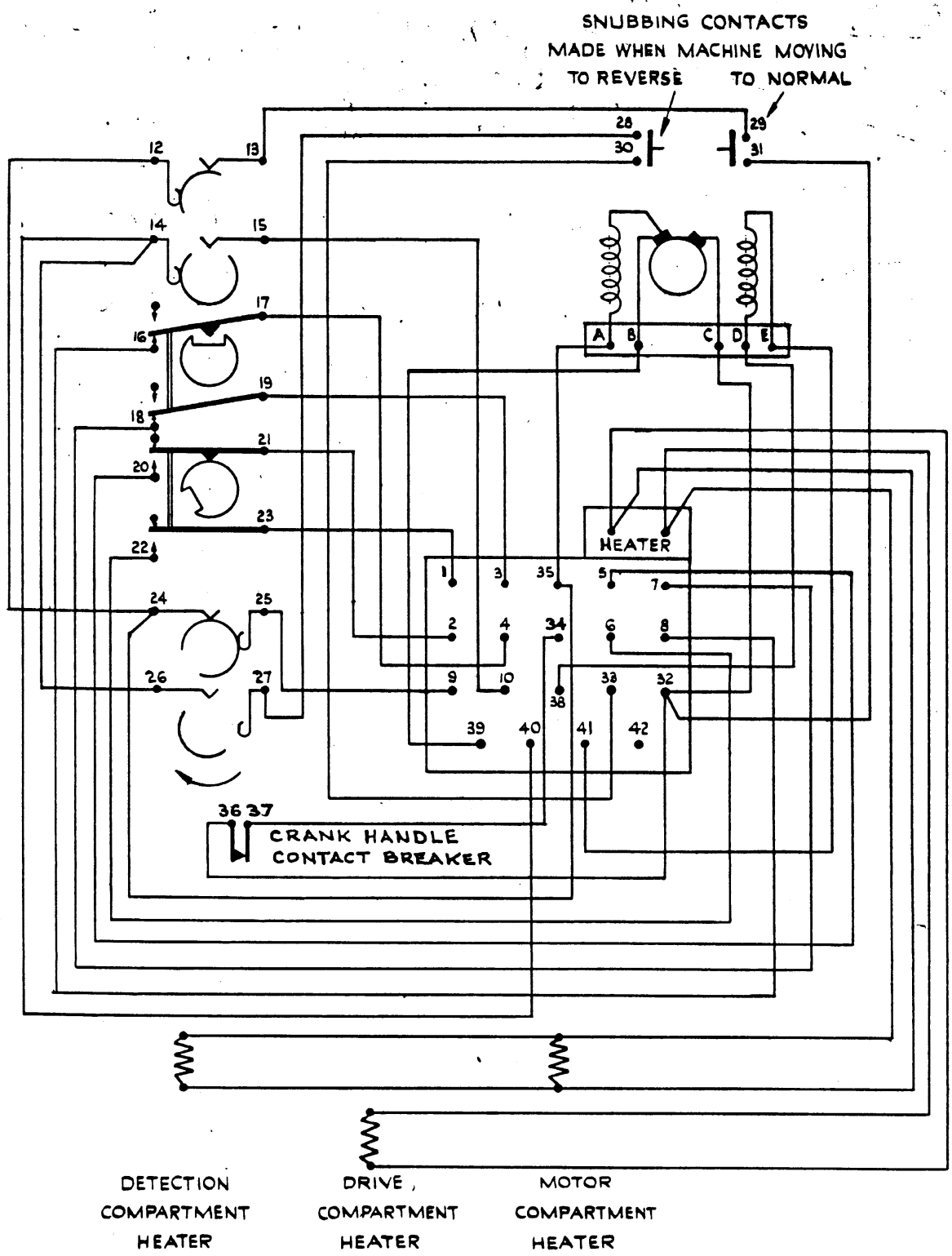

FOR TERMINAL BOARD LINKING SEE E99-38F.

STANDARD WIRING DIAGRAM COMBINED TYPE POINT MACHINE INTERNAL WIRING W. B & S. Co. STYLE 'M3' LEFT-HAND SWITCH NORMALLY CLOSED	BRITISH RLYS. (Southern Region) SOUTHERN HOUSE. CROYDON Chief Signal & Telecommunications Engineer DATE No. E99-38E

A4

TERMINAL WIRING FOR USE WITH CONTROLLER

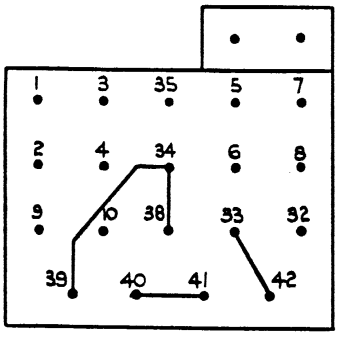

RIGHT-HAND SWITCH
NORMALLY CLOSED

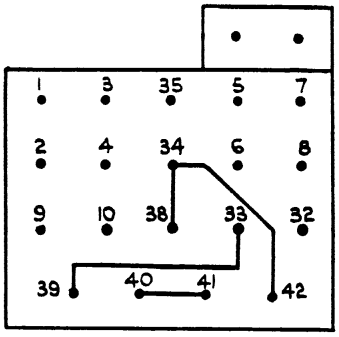

LEFT-HAND SWITCH
NORMALLY CLOSED

TERMINAL WIRING FOR USE WITHOUT CONTROLLER

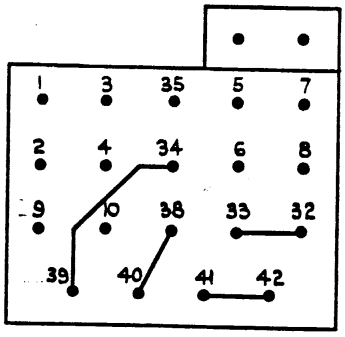

DETECTION LINKS

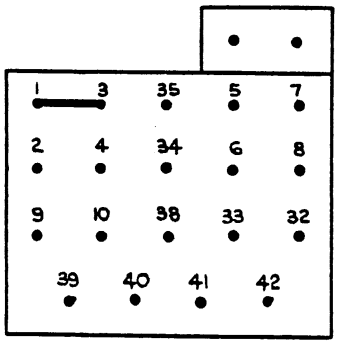

'A' END

DOUBLE-ENDED POINTS

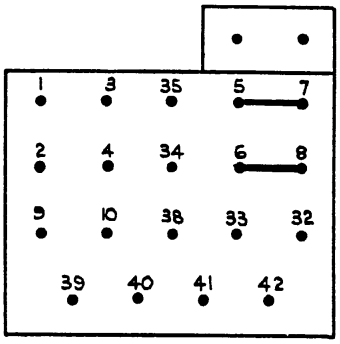

'B' END

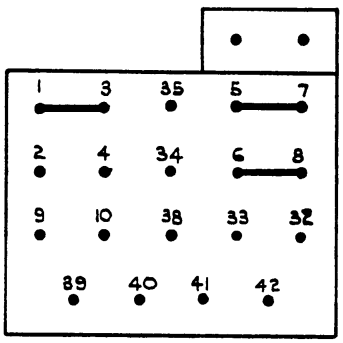

SINGLE-ENDED POINTS

FOR INTERNAL
WIRING SEE
SEPARATE SHEET

STANDARD WIRING DIAGRAM

COMBINED TYPE POINT MACHINE
W.B & S. Co. STYLE 'M3'
TERMINAL PANEL WIRING
& DETECTION LINKS

BRITISH RLYS. (Southern Region)

Chief Signal & Telecommunications Engineer

DATE

No E99-38F

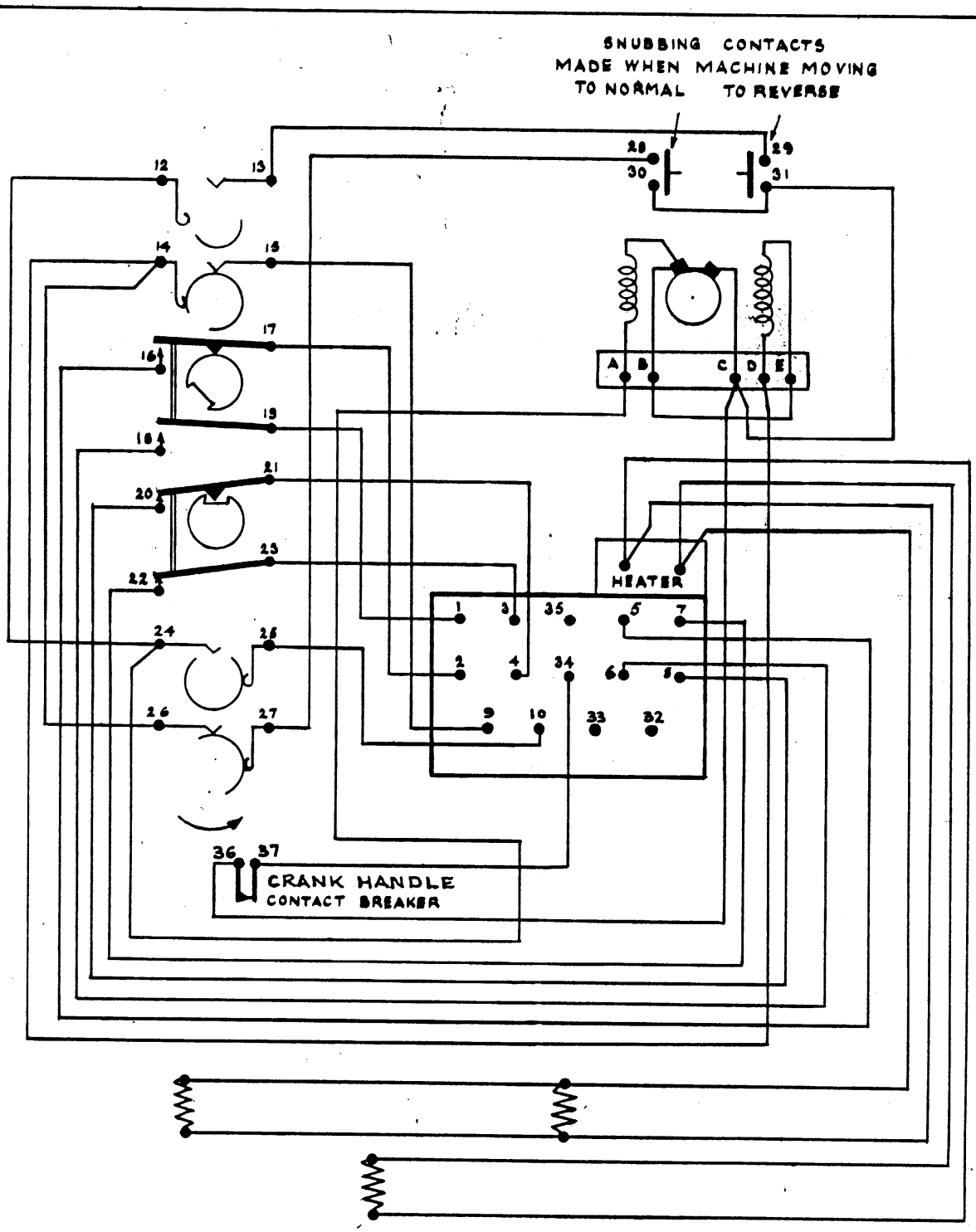

DETECTION COMPARTMENT HEATER

DRIVE COMPARTMENT HEATER

MOTOR COMPARTMENT HEATER.

FOR TERMINAL BOARD LINKING SEE E99-38F (DETECTION ONLY)

STANDARD WIRING DIAGRAM COMBINED TYPE POINT MACHINE INTERNAL WIRING WB&S. Co. STYLE M.3 RIGHT HAND SWITCH NORMALLY CLOSED (3 WIRE CONTROL ONLY)	BRITISH RLYS (Southern Region) SOUTHERN HOUSE CROYDON Chief Signal & Telecommunications Engineer DATE No. E99-38G-1

A4.

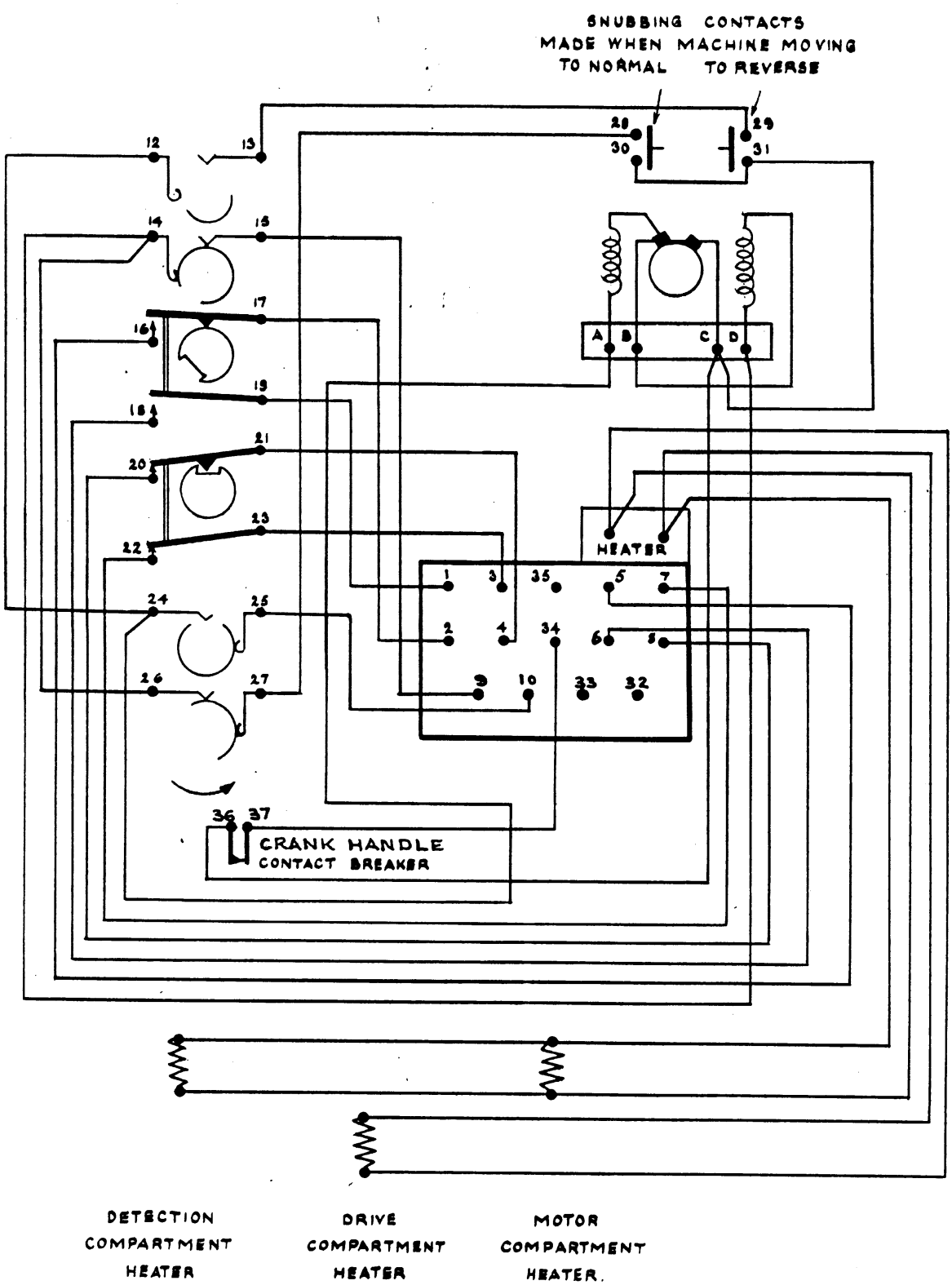

FOR TERMINAL BOARD LINKING SEE E99-38F (DETECTION ONLY)

STANDARD WIRING DIAGRAM COMBINED TYPE POINT MACHINE INTERNAL WIRING WB&S. Co. STYLE M.3 RIGHT HAND SWITCH NORMALLY CLOSED (3 WIRE CONTROL ONLY)	BRITISH RLYS (Southern Region) SOUTHERN HOUSE CROYDON Chief Signal & Telecommunications Engineer DATE No. E99-38G-2

A4.

Wiring shown is for 4-wire machine with RIGHT HAND switch normally closed.
For other configurations, reconnect wires marked • in accordance with table below.

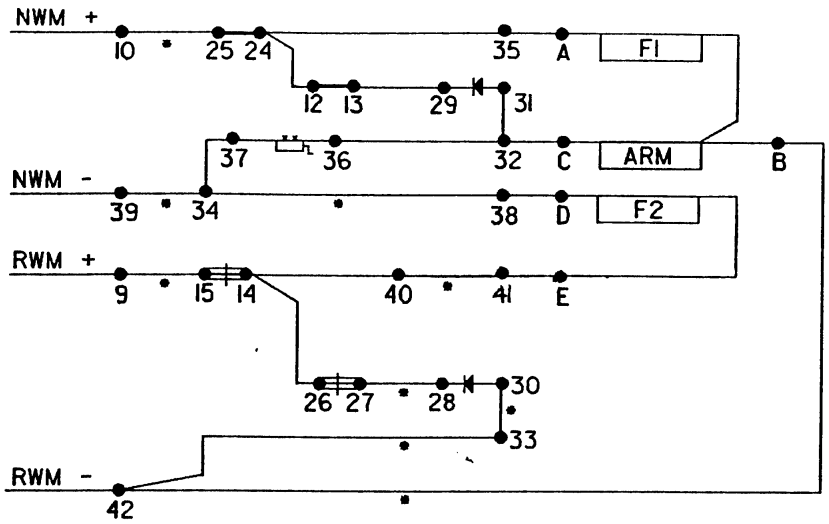

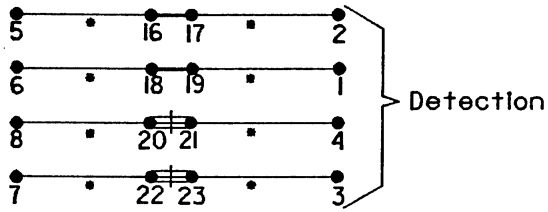

4 WIRE		3 WIRE		
RH	LH	RH	LH	
16 - 5	16 - 8	16 - 5	16 - 8	Detection
17 - 2	17 - 4	17 - 2	17 - 4	
18 - 6	18 - 7	18 - 6	18 - 7	
19 - 1	19 - 3	19 - 1	19 - 3	
20- 8	20- 5	20- 8	20- 5	
21 - 4	21 - 2	21 - 4	21 - 2	
22- 7	22- 6	22- 7	22- 6	
23- 3	23- 1	23- 3	23- 1	
25- 10	25- 9	25- 10	25- 9	Operation
15 - 9	15 - 10	15 - 9	15 - 10	
27-28	27-28	27-30	27-30	
30-33	30-33	28-33	28-33	
33-42	33-39	32-33	32-33	
34-38	34-38	34-39	34-39	
34-39	34-42	38-40	38-40	
40-41	39- B	41 -42	41 -42	
42- B	40-41	42- B	42- B	

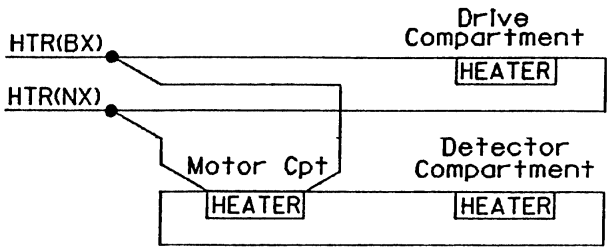

NORMALLY CLOSED SWITCH	CONTACTS NORMALLY CLOSED	CONTACTS NORMALLY OPEN	EXTERNAL CONNECTIONS AND POLARITY TYPE	N→R	R→N
R.H	14/15 N-R op 26/27 N snub 20/21 N det 22/23 N det	24/25 R-N op 12/13 R snub 16/17 R det 18/19 R det	4 wire	9 +ve 42 -ve	10 +ve 39 -ve
			3 wire	9 -ve 39 +ve	10 +ve 39 -ve
L.H	24/25 N-R op 12/13 N snub 16/17 N det 18/19 N det	14/15 R-N op 26/27 R snub 20/21 R det 22/23 R det	4 wire	9 +ve 42 -ve	10 +ve 39 -ve
			3 wire	9 +ve 39 -ve	10 -ve 39 +ve

Derived from W.S Drawing B 13196/4D

Revisions

REF. FILE:- QSA1:[60,1]ABORD.DGN;1
DESIGN FILE:- QSA2:[246,2]E99D38H.DGN

Microfilm No.

1/1	W	23.6.88		

British Railways Board Croydon
Signal and Telecommunications Engineer

STANDARD WIRING DIAGRAM
COMBINED TYPE POINT MACHINE
WESTINGHOUSE STYLE M3
WITH DIODE SNUBBING

British Rail

Director of S & T Engineering

No. E99-38H

A3

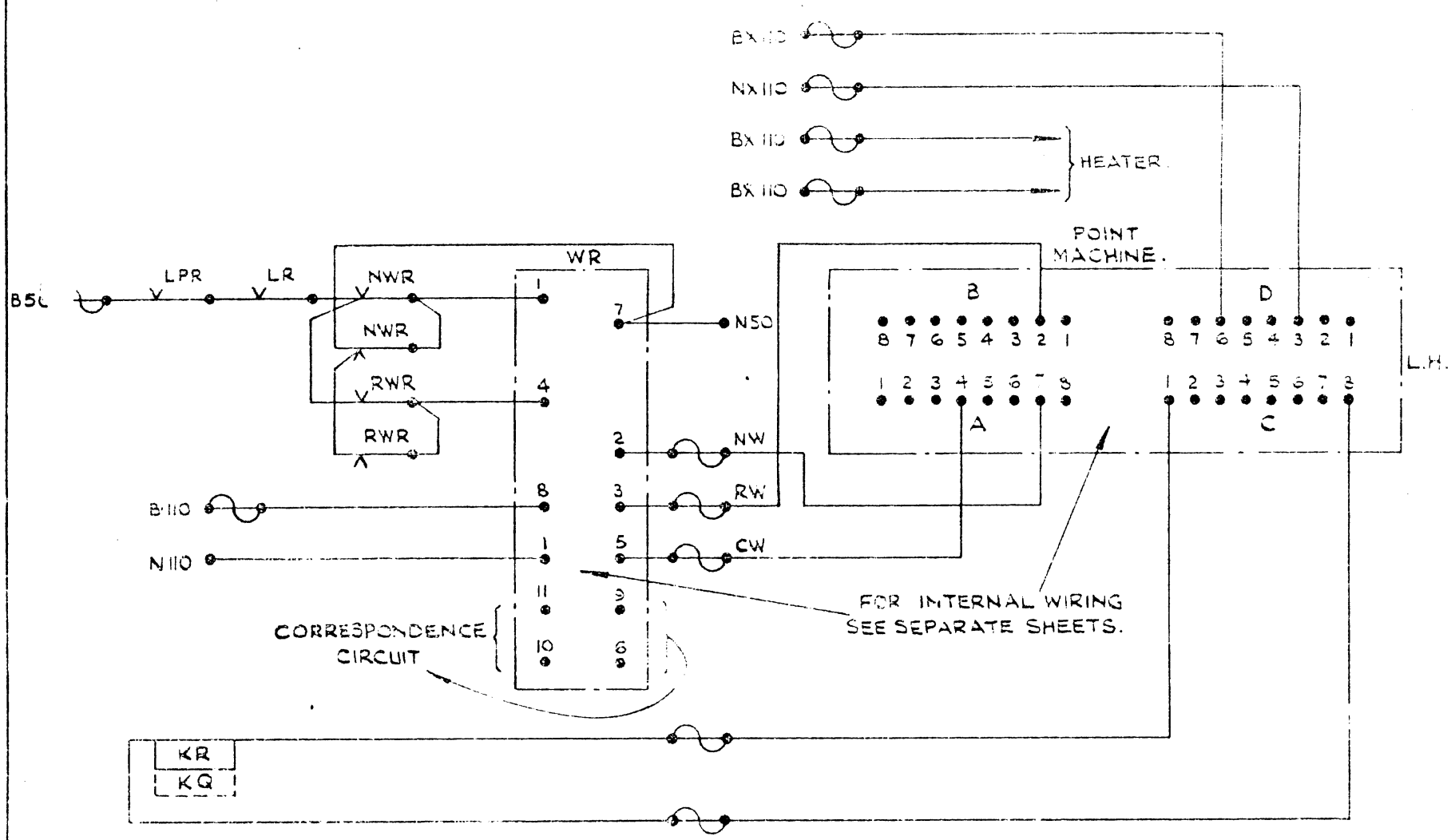

BRITISH RLYS (Southern Region)

WIMBLEDON

Chief Signal & Telecommunications Engineer

DATE

No. E 99-39A

STANDARD WIRING DIAGRAM.

COMBINED TYPE POINT MACHINES.

(AEI - GRS LTG TYPE 5A)

SINGLE ENDED - LEFT HAND SWITCH

NORMALLY CLOSED

CONTROLLED BY ROUTE RELAY

INTERLOCKING

B

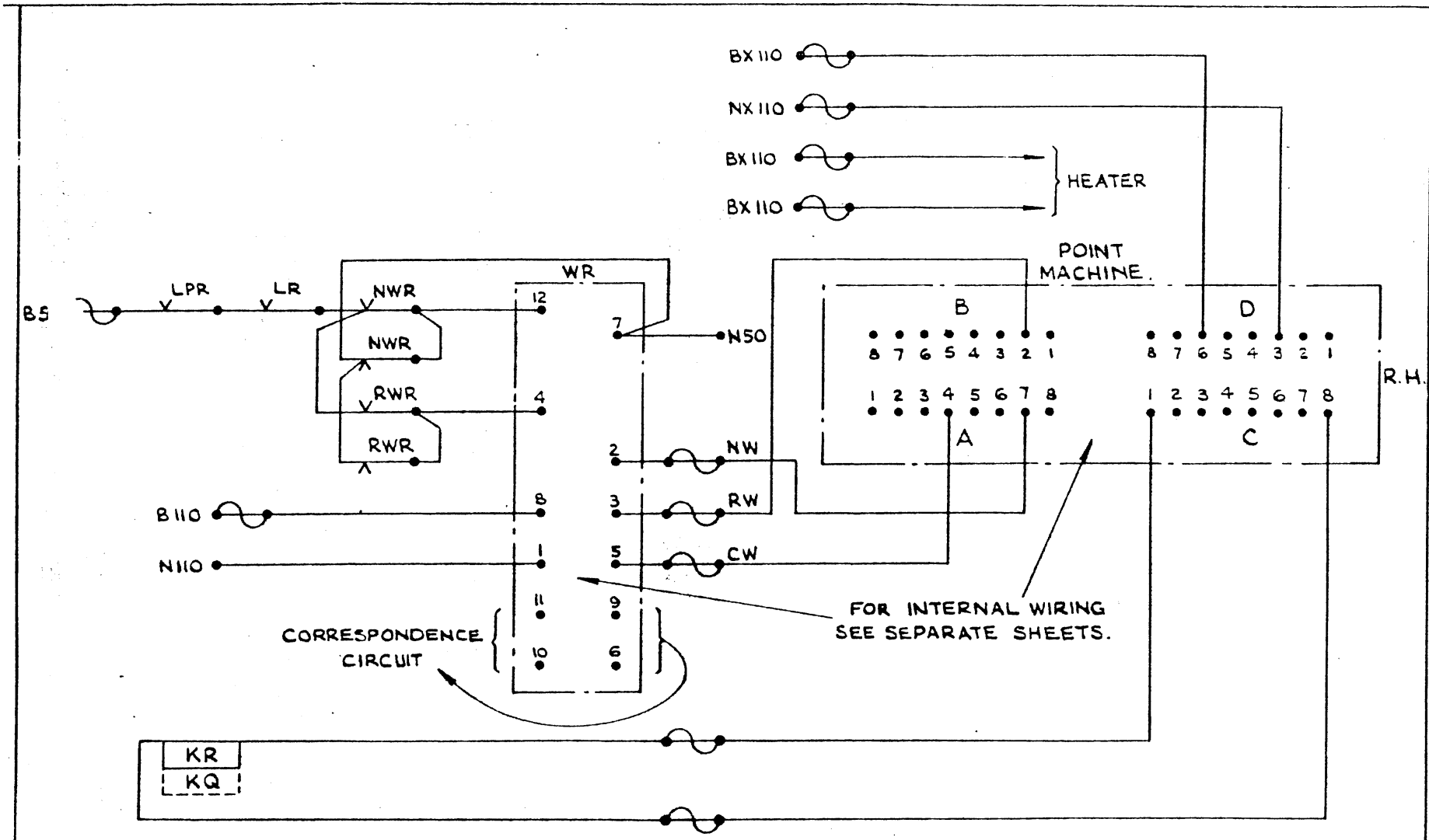

BRITISH RLYS. (Southern Region).

WIMBLEDON

Chief Signal & Telecommunications Engineer

DATE

No. E 99-39B

STANDARD WIRING DIAGRAM.

COMBINED TYPE POINT MACHINES

(AEI-GRS LTG TYPE 5A)

SINGLE ENDED-RIGHT HAND SWITCH

NORMALLY CLOSED

CONTROLLED BY ROUTE RELAY

INTERLOCKING

B.

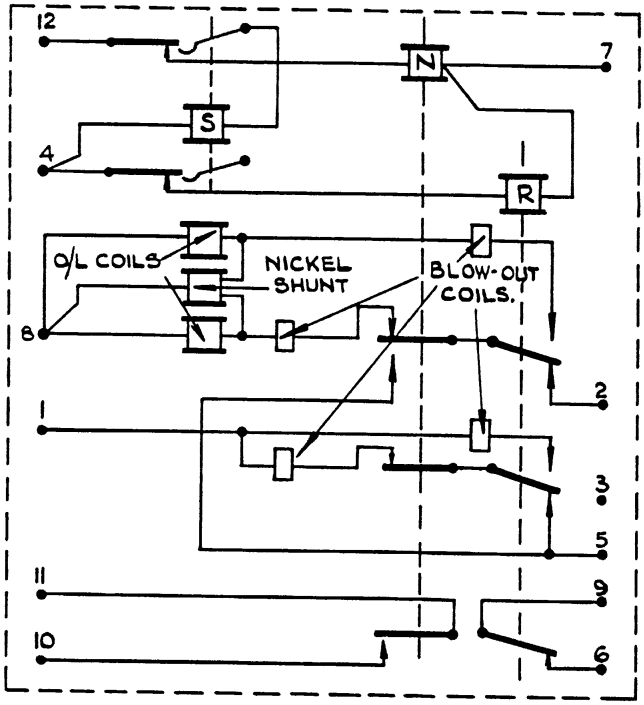

POINT MACHINE - RIGHT HAND SWITCH NORMALLY CLOSED.

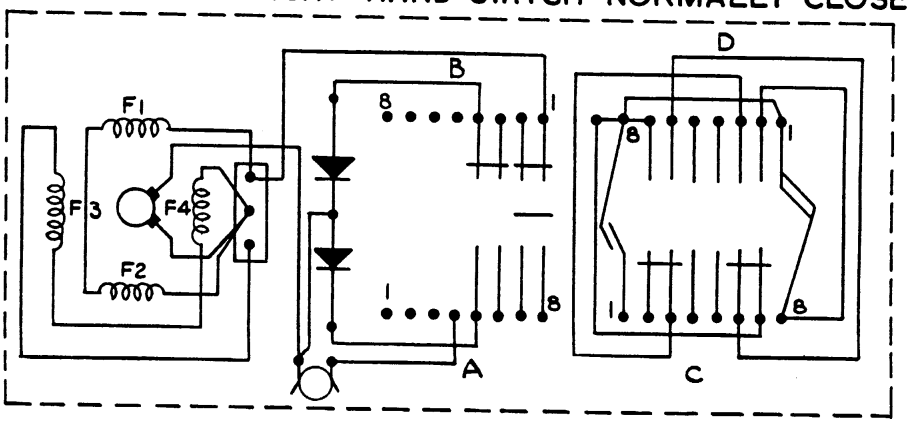

POINT MACHINE - LEFT HAND SWITCH NORMALLY CLOSED.

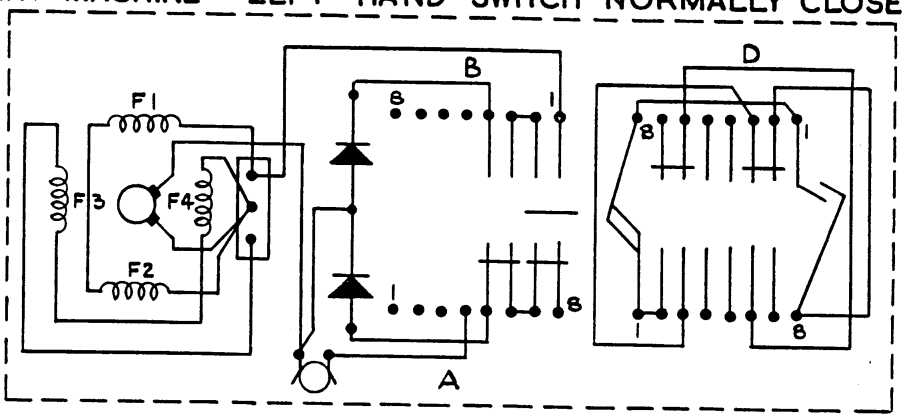

STANDARD WIRING DIAGRAM.

COMBINED TYPE POINT MACHINES
INTERNAL WIRING.

AEI- GRS STYLE 5A.

BRITISH RLYS. (Southern Region).
WIMBLEDON

Chief Signal & Telecommunications Engineer

DATE

No. E 99 - 39C

B

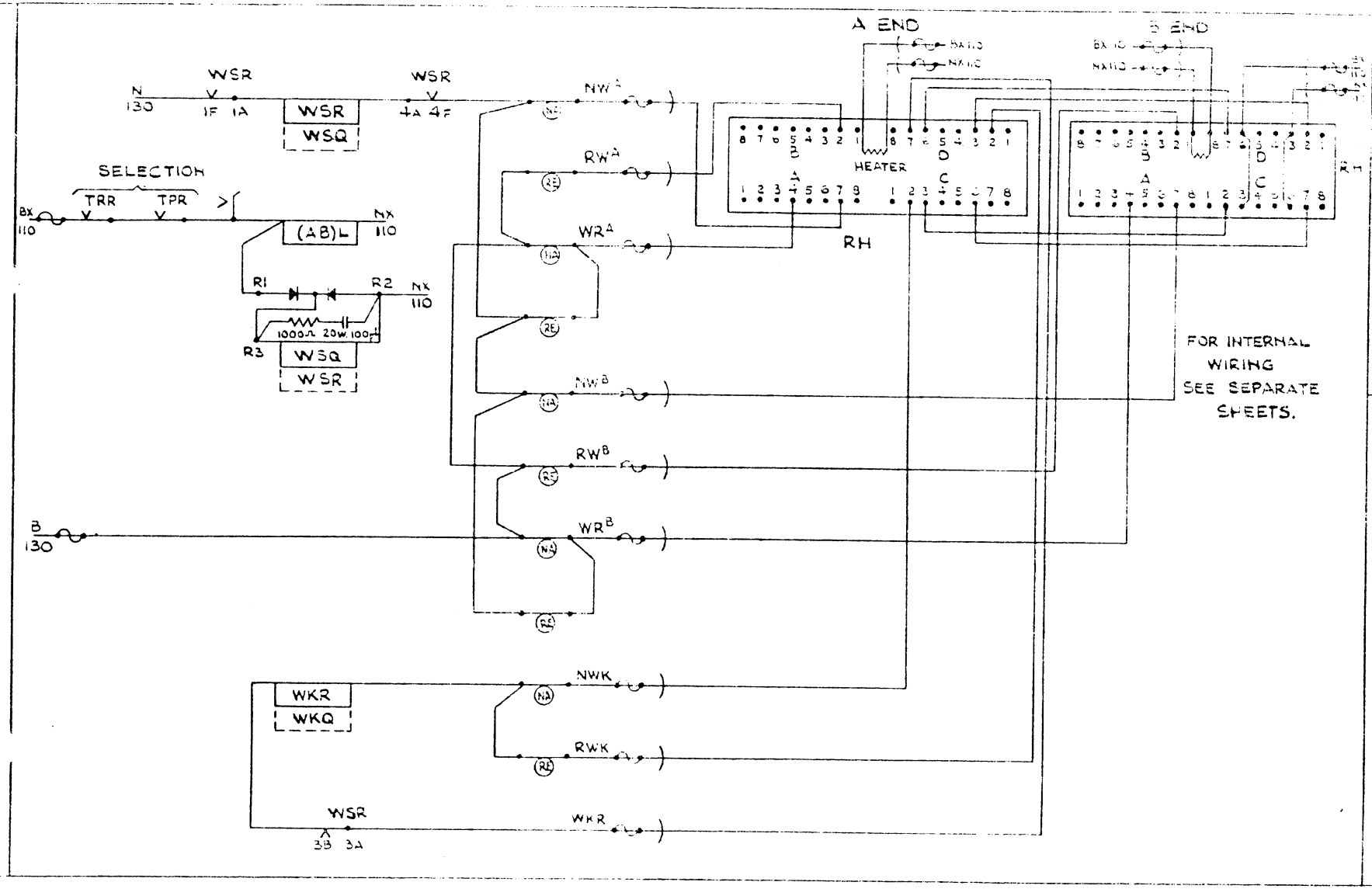

BRITISH RLYS. (Southern Region)
WIMBLEDON

Chief Signal & Telecommunications Engineer

DATE

No. E99-39D

STANDARD WIRING DIAGRAM

COMBINED TYPE POINT MACHINES
FOR DOUBLE END POINTS

AEI-GRS STYLE 5A

B.

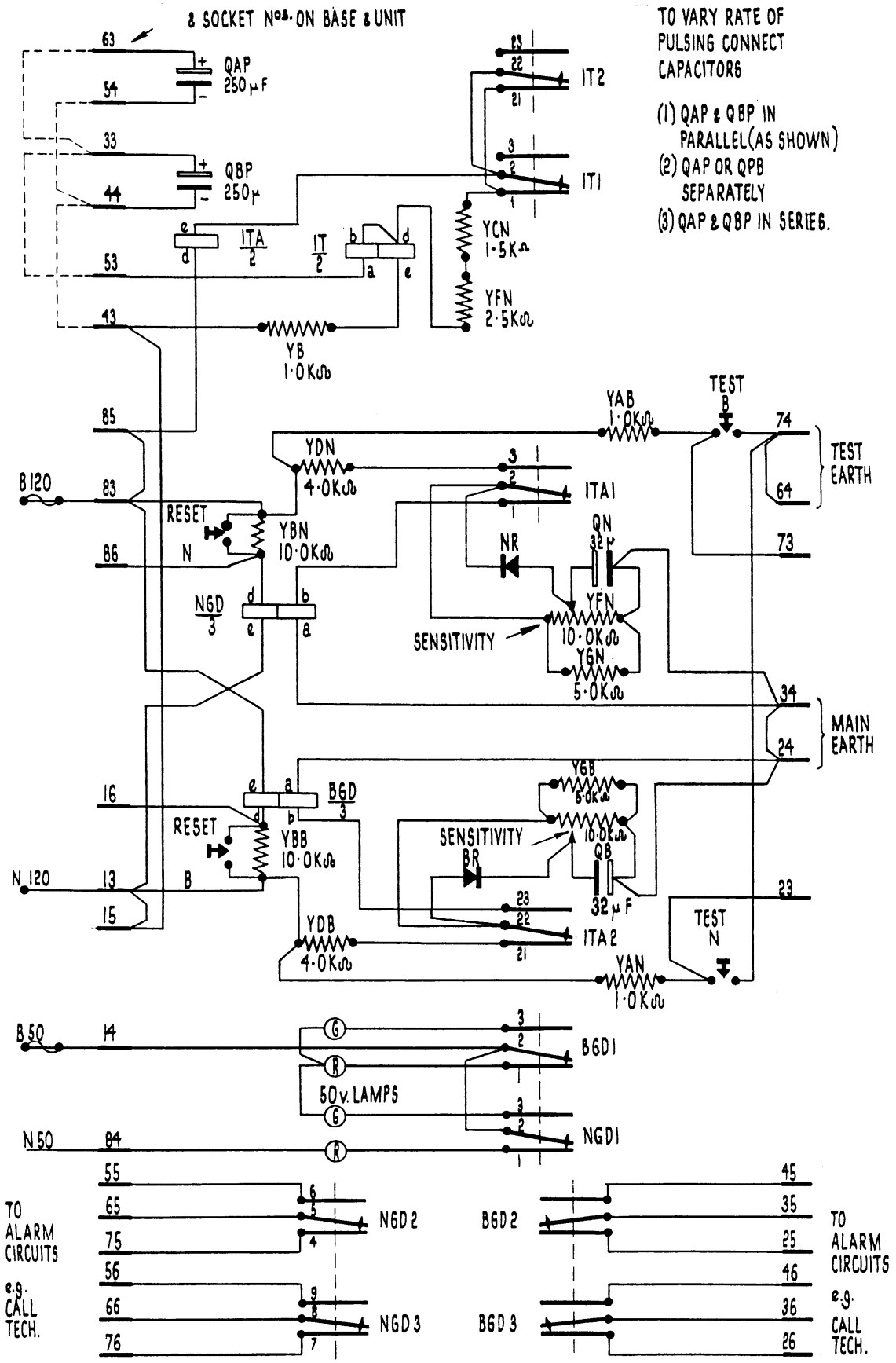

STANDARD WIRING DIAGRAM

120 v. D.C.
EARTH LEAKAGE DETECTOR
S.G.E. (SIGNALS) LTD. TYPE PG 050
BASE PG051

BRITISH RLYS (SOUTHERN REGION)

Chief Signal & Telecommunications Engineer

DATE

No. E99-41A

B.

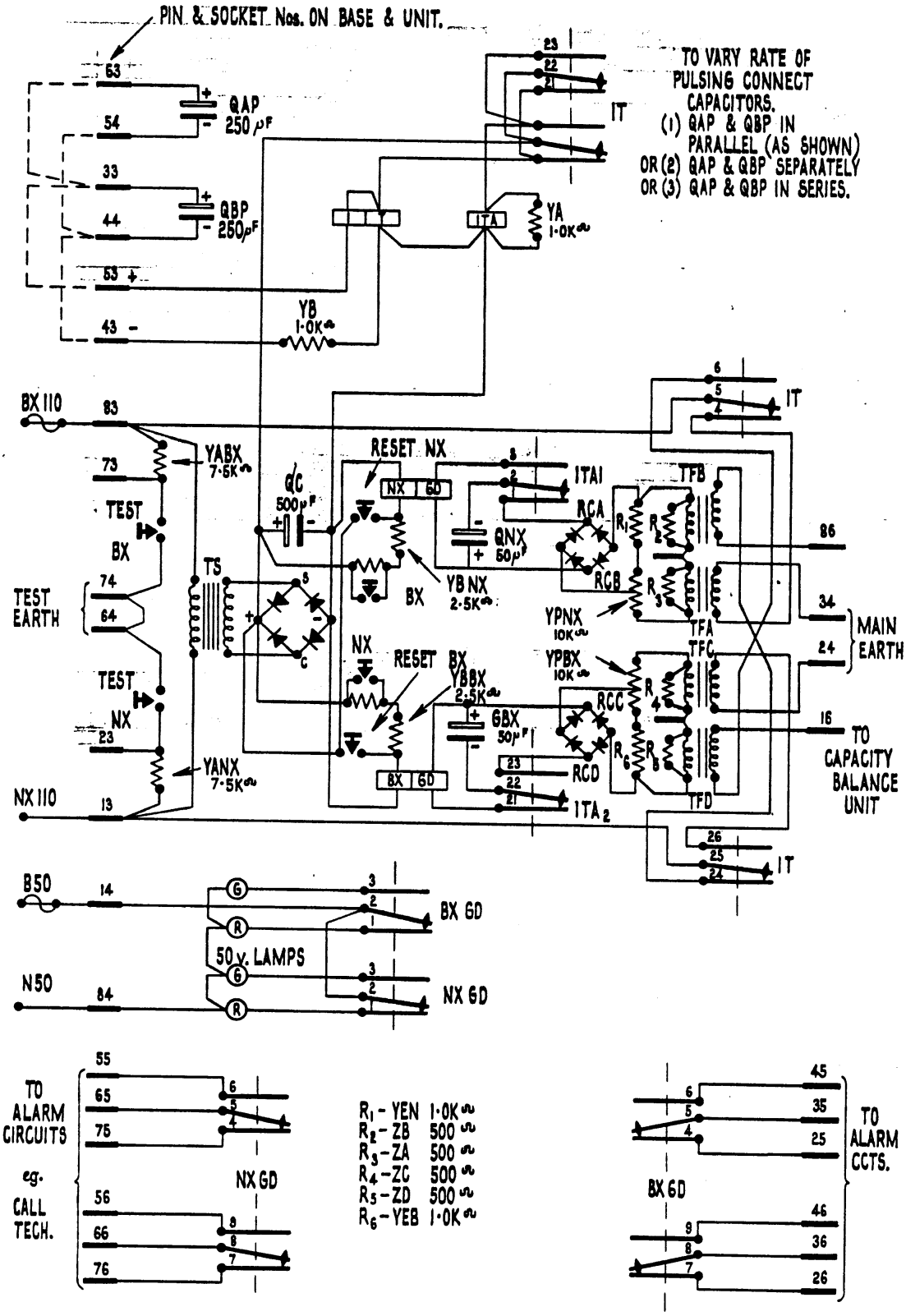

STANDARD WIRING DIAGRAM

110v AC

EARTH LEAKAGE DETECTOR

S.G.E. SIGNALS LTD. TYPE PGO90.

BASE PGO91.

BRITISH RAILWAYS (Southern Region)

WIMBLEDON

Chief Signal & Telecommunications Engineer

DATE

No. E99-41B

B.

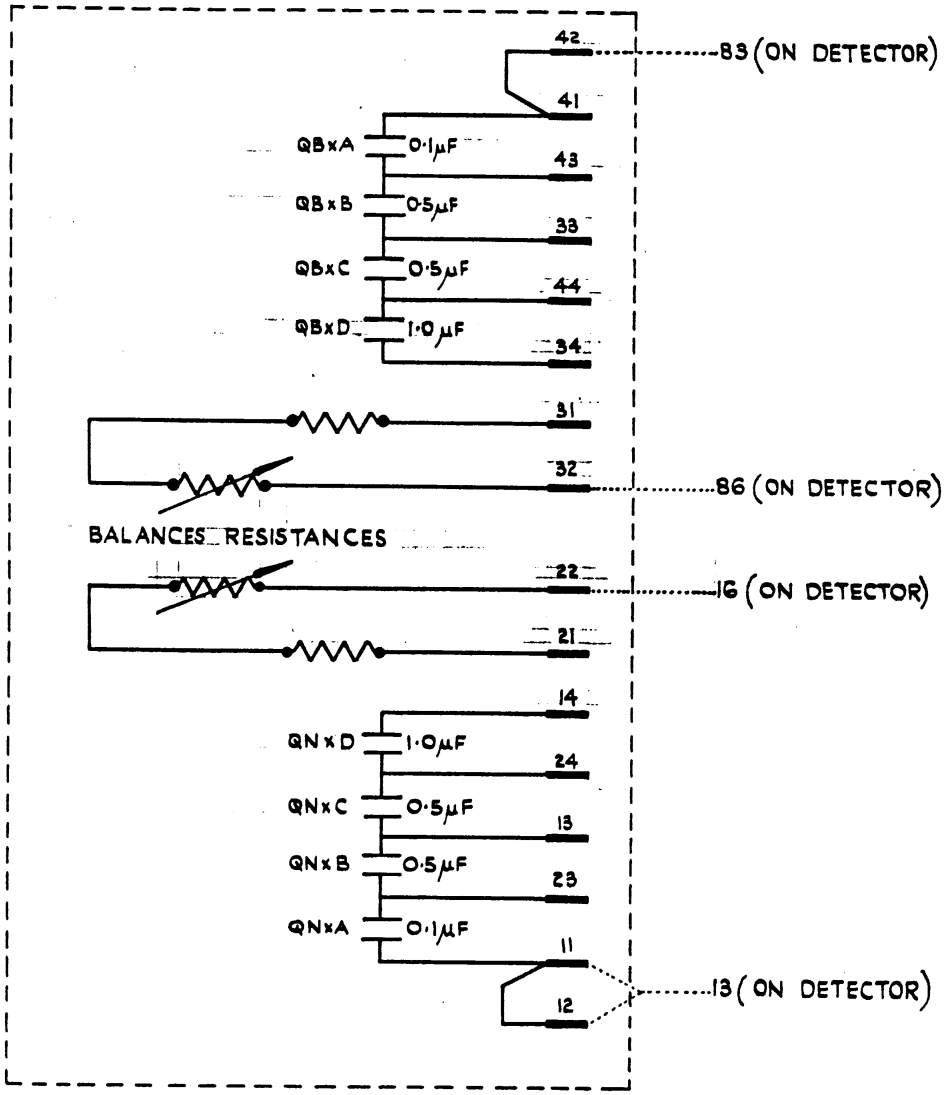

USE IN CONJUNCTION WITH A.C. EARTH LEAKAGE DETECTOR
(SEE SEPARATE SHEET)

STANDARD WIRING DIAGRAM CAPACITY BALANCE UNIT S.G.E (SIGNALS) LTD. TYPE PG 095 BASE PG 096	BRITISH RLYS. (Southern Region) WIMBLEDON Chief Signal & Telecommunications Engineer. DATE No. E99-41C.

B

A. APPROACH; AUTOMATIC.
B. BLOCK; BOLT.
C. CHECKING OR PROVING.
D. CLEAR (GREEN).
E. LIGHT; HEAT (EXTERNALLY APPLIED); EMERGENCY; EARTH.
F. FOG.

G. SIGNAL.

H. CAUTION (YELLOW).
HH. PRELIMINARY CAUTION (DOUBLE YELLOW).
I.
J. TIME (DELAYED ACTION).
K. INDICATING OR DETECTING.
LOCKING; LEFT.
M. MARKER; MAGNETIC.
N. NORMAL.
O. RETARDER.
P. REPEATING.
Q. TREADLE OR BAR.
R. REVERSE; RIGHT; DANGER (RED).

S. STICK.
T. TRACK CIRCUIT.

U. ROUTE (ASPECT DISPLAYED TO BE SHOWN IN BRACKETS).
V. TRAINSTOP.
W. POINTS.
X. AUDIBLE INDICATOR (SUCH AS BELL, BUZZER, HORN) LEVEL OR HIGHWAY CROSSING.
Y. SLOTTING OR DISENGAGING.
Z. SPECIAL (TO BE EXPLAINED ON PLAN).
Up. UP (DIRECTION OF TRAFFIC).
Dn. DOWN (DIRECTION OF TRAFFIC).

A.
B. BLOCK INSTRUMENT.
C. CONTACT.
D.
E. ELECTRIC LAMP (ILLUMINATING); EARTH.
F. FOGGING APPARATUS (E.G. DETONATOR PLACER).
f. FUSE.
G. SIGNAL APPARATUS, INCLUDING LIGHT SIGNALS.
g. LIGHTNING ARRESTER.
H. CAPACITOR.

I. INDUCTOR.
J. RECTIFIER.
K. INDICATOR (VISUAL).
L. LOCK.
M. MOTOR.
N. RELEASE; HAND-OPERATED SWITCH; PUSH BUTTON OR KEY.
O. RESISTOR.
P. LEVER LATCH OR TRIGGER CONTACT.
Q. LOCAL COIL OF DOUBLE-ELEMENT RELAY.
R. RELAY OR CONTACTOR (LINE OR TRACK ELEMENT OF DOUBLE-ELEMENT RELAY).
S.
T. TRANSFORMER; TRANSMITTER.
t. TERMINAL.
U. TRAIN DESCRIPTION APPARATUS (FOR ROUTE INDICATING).
V. TRAINSTOP APPARATUS.
W. POINTS OPERATING APPARATUS.
X. AUDIBLE INDICATOR (SUCH AS BELL, BUZZER, HORN).

Y. DISENGAGING APPARATUS.
Z. SPECIAL UNIT (TO BE EXPLAINED ON PLAN).

EXPLANATION OF DESCRIPTIONS

THE WIRING DIAGRAM DESCRIPTION OF THE UNIT IS MADE UP OF TWO PARTS NAMELY :—

1. THE NUMERICAL OR ALPHABETICAL PREFIX, FOR THE NUMBER OF THE LEVER, SIGNAL, POINTS OR TRACK CIRCUIT CONCERNED.

2. THE ALPHABETICAL TERM, CONSISTING OF ONE OR MORE LETTERS. USED SINGLY OR FINALLY IS A NOUN, AND DESIGNATES THE GENERAL KIND OF UNIT. PRECEDING LETTERS, WHICH ARE USED AS ADJECTIVES, DENOTE THE PURPOSE OF THE UNIT.

POSITION OF LEVERS AS IN THE CASE OF A LEVER LOCK ARE SHOWN IN BRACKETS.

DESCRIPTION OF APPARATUS

BS 376: PART 2:1954	OLD DESCRIPTION	APPARATUS
10G		10 SIGNAL APPARATUS.
10DG	G	10 SIGNAL GREEN ASPECT.
10HHG	YY	10 SIGNAL 2ND YELLOW ASPECT.
10HG	Y	10 SIGNAL 1ST YELLOW ASPECT.
10RG	R	10 SIGNAL RED ASPECT.
10(1)UG	1	10 SIGNAL ROUTE 1 OPERATION.
10AG		10 LEVER SIGNAL A OPERATION.
10DE	G	10 SIGNAL GREEN ASPECT LAMP.
10HHE	YY	10 SIGNAL 2ND YELLOW ASPECT LAMP.
10HE	Y	10 SIGNAL 1ST YELLOW ASPECT LAMP.
10RE	R	10 SIGNAL RED ASPECT LAMP.
10(1)UE		10 SIGNAL ROUTE 1 LAMP.
10PG		10 SIGNAL REPEATING SIGNAL.
10DGKE		GREEN ASPECT INDICATOR (LAMP).
10HHGKE		2ND YELLOW ASPECT INDICATOR (LAMP).

DESCRIPTION OF APPARATUS

BS 376 : PART 2 : 1954	OLD DESCRIPTION	APPARATUS
10HGKE		1ST YELLOW ASPECT INDICATOR (LAMP).
10RGKE		RED ASPECT INDICATOR (LAMP).
10(1)UKE		ROUTE 1 INDICATOR (LAMP).
10GK		10 SIGNAL INDICATOR (NON LAMP).
10EK		10 LIGHT INDICATOR (NON LAMP).
10GCR	AR10	10 SIGNAL PROVING RELAY.
10RGCPR	ARR 10 "ON"	10 "ON" SIGNAL PROVING REPEATING RELAY.
10DGCPR	ARR 10 "OFF"	10 "OFF" SIGNAL PROVING REPEATING RELAY.
10DR	IR & OR10	10 SIGNAL GREEN RELAY.
10HHR	IR10	10 SIGNAL 2ND YELLOW RELAY.
10HR	HR10	10 SIGNAL 1ST YELLOW RELAY.
10GR	SR10	10 SIGNAL RELAY.
10DECR		10 SIGNAL GREEN ASPECT PROVING RELAY.
10HHECR		10 SIGNAL 2ND YELLOW ASPECT PROVING RELAY.
10HECR		10 SIGNAL 1ST YELLOW ASPECT PROVING RELAY.
10RECR		10 SIGNAL RED ASPECT PROVING RELAY.
10UECR	LPR10	10 JUNCTION INDICATOR PROVING RELAY.
10EKR		10 LIGHT INDICATING RELAY (SEMAPHORE).
10GAR	ACR10	10 SIGNAL APPROACH CONTROL RELAY.
10WKR	PDR10	10 POINT DETECTING RELAY.
10NWKR	PDR 10 NOR	10 NORMAL POINT DETECTING RELAY.
10RWKR	PDR 10 REV	10 REVERSE POINT DETECTING RELAY.
10WKPR	PDRR10	10 POINT DETECTING REPEATING RELAY.
10NWKE		10 NORMAL POINT INDICATOR (LAMP).
10RWKE		10 REVERSE POINT INDICATOR (LAMP).
10NW		10 NORMAL POINT OPERATING.
10RW		10 REVERSE POINT OPERATING.
10WSR	SSTL10	10 POINT STICK RELAY.

DESCRIPTION OF APPARATUS

BS 376: PART 2: 1954	OLD DESCRIPTION	APPARATUS
10WR		10 POINT CONTACTOR RELAY.
AATR	TR AA	AA TRACK RELAY.
AATPR	TRR OR TRR[A]	AA TRACK REPEATING RELAY.
AATPPR	TRR[B]	AA TRACK 2ND REPEATING RELAY.
AATQ		AA TRACK RELAY LOCAL WINDING.
10JR		10 TIME ELEMENT RELAY.
AAJR		AA TIME ELEMENT RELAY.
10SR	SS10	10 STICK RELAY.
MQR		M TREADLE RELAY.
10PR	LR10	REPEATING RELAY OF FOR EXAMPLE, A LEVER CONTACT, TRACK CIRCUIT RELAYS, AND/OR POINT DETECTOR RELAYS.
USR	RLR	ROUTE LOCKING RELAY.
LSR	LGR	LOCKING STICK RELAY.
AV		A TRAINSTOP.
AVCR		A TRAINSTOP PROVING RELAY.
UpBR	BR	UP BLOCK RELAY.
DnBR	BR	DOWN BLOCK RELAY.
UpBPR	BRR	UP BLOCK REPEATING RELAY.
BJR		BLOCK TIME ELEMENT RELAY.
BX		BLOCK BELL.
MQK		M FOULING BAR INDICATOR (NON LAMP).
ABTK		AB TRACK CIRCUIT INDICATOR (NON LAMP).
(B)LSR	BLR	BACKLOCKING STICK RELAY.
LCC	LPS	LOCK PROVING CONTACT.
AEZ		A EMERGENCY DETONATOR PLACER APPARATUS.
AEZCR		A EMERGENCY DETONATOR PLACER PROVING RELAY.
WKR	DET RET	POINT DETECTION RETURN.
WR	OP RET	POINT OPERATING RETURN.
H	RC OR C	CAPACITOR (CONDENSER).

TRACK PLAN DESCRIPTION

TB TN	TRACK CIRCUIT FEED.
RB RN	TRACK CIRCUIT RELAY.
H	CAPACITOR (CONDENSER). TRACK RELAY CAPACITOR (CONDENSER).
T	TRANSFORMER.

ELECTRICAL SUPPLY

B N	POSITIVE SIDE NEGATIVE SIDE } INDICATES CONNECTION BY AN INDIVIDUAL WIRE TO THE BUSBAR OR SUPPLY TERMINAL OF A D.C. SYSTEM.
BX NX	FEED SIDE RETURN SIDE } INDICATES CONNECTION BY AN INDIVIDUAL WIRE TO THE BUSBAR OR SUPPLY TERMINAL OF AN A.C. SYSTEM.
CR	INDICATES CONNECTION TO A WIRE COMMON TO OTHER CIRCUITS WITH SEPARATE SOURCES OF SUPPLY AND INSULATED FROM EARTH. FOR EXAMPLE – (REPEATER RETURN).

Nº	DESCRIPTION	WIRING SYMBOL
1001	ELECTRO-MAGNET.	
1002	ELECTRO-MAGNET, WITH DOUBLE WINDING.	ADD NOTE IF DIFFERENTIALLY WOUND.
1003	ELECTRO-MAGNET, SLOW ACTING.	SLOW RELEASE SLOW PICK UP
1004	ELECTRO-MAGNETIC SYSTEM, REQUIRING TWO ENERGIZED WINDINGS	
1101	CONTACTS ON NON-POLARIZED ARMATURE. (a) CLOSED WHEN MAGNET IS ENERGIZED. ('FRONT' CONTACT).	OR CLOSED OR OPEN
	(b) CLOSED WHEN MAGNET IS DE-ENERGIZED. ('BACK' CONTACT).	OR CLOSED OR OPEN
1102	CONTACT ON THREE POSITION POLARIZED ARMATURE. (a) MADE ONLY WHEN RELAY IS ENERGIZED TO N POSITION. (N CONTACT).	N POSITION
	(c) MADE ONLY WHEN RELAY IS ENERGIZED TO R POSITION. (R CONTACT).	

Nº	DESCRIPTION	WIRING SYMBOL
1103	CONTACTS ON TWO-POSITION ARMATURE, EITHER CONTACT REMAINING CLOSED UNTIL RELAY IS OPERATED TO THE OPPOSITE POSITION. (a) N CONTACT.	N POSITION
	(b) R CONTACT.	
1104	CONTACTS ON TWO POSITION POLARIZED ARMATURE. BIASED TO ONE POSITION BY MAGNETISM, GRAVITY OR SPRING. ARROW SHOWS DIRECTION OF BIAS. (a) N CONTACT	
	(b) R CONTACT	
1105	DEPENDENT CONTACTS. (EXAMPLES)	NON-POLARIZED POLARIZED 2 POSITION POLARIZED 3 POSITION
1106	INDEPENDENT CONTACTS. (EXAMPLES)	
1108	DOUBLE BREAK CONTACTS ON NON-POLARIZED ARMATURE. (a) CLOSED WHEN MAGNET ENERGIZED. ('FRONT' CONTACT)	CLOSED OPEN
	(b) CLOSED WHEN MAGNET DE-ENERGIZED. ('BACK' CONTACT)	

Nº	DESCRIPTION	WIRING SYMBOL
	D.C. NEUTRAL RELAY, FITTED WITH ONE INDEPENDENT FRONT CONTACT AND ONE INDEPENDENT BACK CONTACT, AND SHOWN ENERGIZED. (COMBINATION OF SYMBOLS 1001, 1101).	
	A.C. RELAY, DOUBLE ELEMENT WITH THREE-POSITION ARMATURE FITTED WITH ONE N AND ONE R DEPENDENT CONTACT. (COMBINATION OF SYMBOLS 1004, 1105).	
	D.C. NEUTRAL POLAR RELAY WITH NEUTRAL ARMATURE FITTED WITH ONE FRONT AND ONE BACK DEPENDENT CONTACTS. AND POLARIZED ARMATURE, FITTED WITH ONE N AND ONE R DEPENDENT CONTACTS. (COMBINATION OF SYMBOLS 1001, 1101, & 1105).	
1203	D.C. INTERLOCKED RELAY. MECHANICAL INTERLOCKING PREVENTS BOTH ARMATURES ASSUMING FULLY ENERGIZED POSITION AT THE SAME TIME.	
1301	INDICATOR, ELECTRO-MAGNETIC TYPE. N.B. DETAILS OF TYPE MAY BE ADDED.	

Nº	DESCRIPTION	WIRING SYMBOL
1309	ELECTRIC LAMP. DOUBLE POLE.	
1310	ELECTRIC LAMP. TRIPLE POLE.	
1311	ELECTRIC LAMP USED AS INDICATOR	
1401	ELECTRIC LEVER LOCKS (SHOW LOCKING POSITIONS BY LETTERS AS IN SYMBOLS 1601 & 1602) (a) WITHOUT BUILT IN ECONOMISER CONTACTS.	N
	(b) WITH BUILT IN ECONOMISER CONTACTS.	N
1402	ELECTRIC LOCK FOR GENERAL PURPOSES OTHER THAN LEVER LOCK. (FUNCTION TO BE INDICATED).	
1403	LOCK PROVING CONTACT. (b) LOCK IN CONTACT.	
1501	BELL (GENERAL SYMBOL).	

Nº	DESCRIPTION	WIRING SYMBOL
1502	BELL. SINGLE STROKE.	
1504	MAGNETO BELL.	
1505	BUZZER.	
1705	ARM OR SLOT CONTACTS FOR 2-POSITION SIGNALS.	CLOSED IN 'ON' POSITION CLOSED IN 'OFF' POSITION
1708	TRAIN STOP ARM CONTACT. (CONTACTS IN OTHER POSITIONS MAY BE INDICATED AS IN SYMBOL 1705).	CLOSED IN STOP POSITION
1711	PROVING CIRCUIT CONTROLLER. CONTACTS CLOSED BY INSERTION OF DETACHABLE HAND CRANK OR LEVER.	

Nº	DESCRIPTION	WIRING SYMBOL
1713	DETECTOR CONTACTS, FOR POINTS ONLY.	CONTACT CLOSED POINTS IN NORMAL POSITION CONTACTS CLOSED POINTS IN REVERSE POSITION
1714	DETECTOR CONTACTS, FOR BOLT ONLY.	BOLT IN CONTACT CLOSED
1715	DETECTOR CONTACTS, FOR BOTH POINTS & BOLTS.	CONTACT CLOSED POINTS IN NORMAL POSITION, BOLT IN. CONTACT CLOSED POINTS IN REVERSE POSITION, BOLT IN.
1801	KEY 'BREAK' & 'MAKE'.	
1802	PUSH BUTTON OR PLUNGER, 'BREAK'.	
1803	PUSH BUTTON OR PLUNGER, 'MAKE'.	
1804	PUSH BUTTON OR PLUNGER, 'BREAK' & 'MAKE'.	

1802, 3 & 4 STAY PUT BUTTON TO BE INDICATED ON DRAWINGS.

LEVER CONTACTS

Nº 1601 LEVERS WITH EXTREME END POSITION AS NORMAL.

N — FULL NORMAL POSITION OF LEVER.

B — NORMAL INDICATION POSITION.

C — CENTRAL POSITION.

D — REVERSE INDICATION POSITION.

R — FULL REVERSE POSITION.

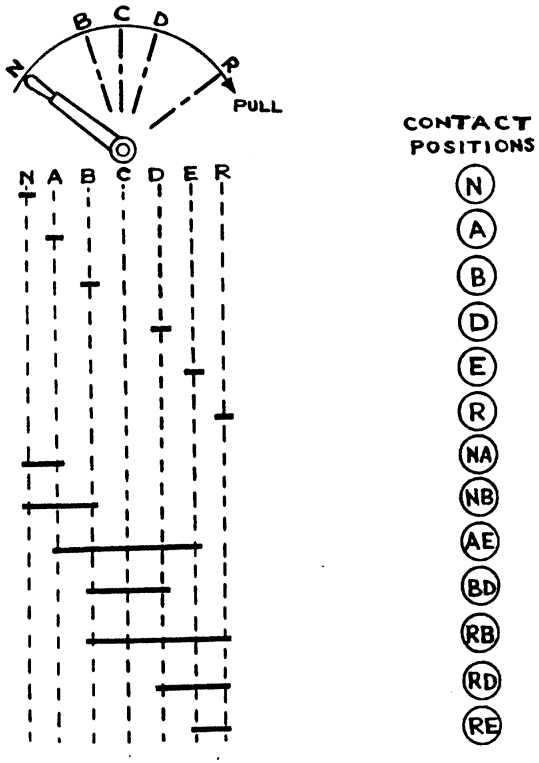

Nº 1602 LEVERS WITH MIDDLE POSITION AS NORMAL WITH A PUSH AND PULL MOVEMENT.

M — MIDDLE POSITION.

F — FULL PUSH POSITION.

FK — PUSH INDICATION POSITION.

TK — PULL INDICATION POSITION.

T — FULL PULL POSITION.

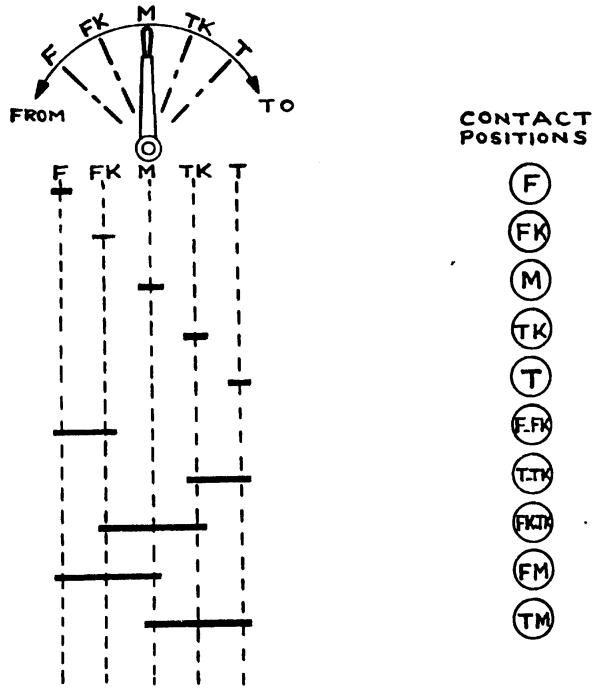

Nº	DESCRIPTION	WIRING SYMBOL
1805	FLOOR PUSH OR FOOT PLUNGER CONTACT.	
1806	CATCH HANDLE CONTACT.	OPEN
08	SWITCH, ONE WAY, HAND OPERATED.	OPEN CLOSED
1810	DEPRESSION BAR CONTACT.	CLOSED OPEN
1811	TREADLE CONTACT.	CLOSED OPEN
1813	TRACK CIRCUIT INTERRUPTER, AT TRAP OR CATCH POINTS.	N.B. WHERE AN INSULATED INTERRUPTER IS PROVIDED ADD 'INS'.

Nº	DESCRIPTION	WIRING SYMBOL
1814	CONTACT ON SIGNAL BOX CLOSING OR BLOCK SWITCH.	WITH CONTROL / WITHOUT CONTROL CONTACT OPEN CONTACT CLOSED
1815	TIME RELEASES. (a) MANUAL. NORMAL CONTACT MADE AFTER RELEASE TIME (b) RELAY. TIME CONTROLLED CONTACT. (i) FRONT (ii) BACK	
1901	RESISTOR (GENERAL SYMBOL) INDUCTIVE OR NON-INDUCTIVE	
1903	RESISTOR, VARIABLE. (IRRESPECTIVE OF THE MEANS OF VARIATION).	
2111	SURGE ABSORBER.	

Nº	DESCRIPTION	WIRING SYMBOL
1905	INDUCTOR (GENERAL SYMBOL) NOTE. THIS SYMBOL MAY ALSO BE USED FOR WINDINGS OF MACHINES & APPARATUS.	
1906	INDUCTOR, VARIABLE. (IRRESPECTIVE OF THE MEANS OF VARIATION).	
1908	INDUCTOR WITH IRON CORE.	
1909	CAPACITOR, FIXED.	
1910	CAPACITOR, VARIABLE. (IRRESPECTIVE OF THE MEANS OF VARIATION).	
1911	CAPACITOR, ELECTROLYTIC. (OPEN PLATE IS POSITIVE).	
2001	TRANSFORMER.	1 SECONDARY WITH TAP 2 OR MORE SECONDARIES
2002	MOTOR (GENERAL SYMBOL).	M

Nº	DESCRIPTION	WIRING SYMBOL
2004	HAND GENERATOR.	G
2006	RECTIFIER SET. SINGLE PHASE TO D.C. (GENERAL SYMBOL).	
2007	RECTIFIER, HALF-WAVE CRYSTAL OR DRY PLATE.	
2105	DEMARCATION BETWEEN INTERNAL & EXTERNAL WIRING. (CONCAVE SIDE = INTERNAL)	
2107	CONNECTION TO EARTH.	
2108	CONNECTION TO METALLIC RETURN	INDIVIDUAL RETURN R COMMON TO SEVERAL CIRCUITS CR
2109	CONNECTOR OR TUBE.	
2110	FUSE.	
2112	ACCUMULATOR OR PRIMARY CELLS. NOTE: THE LONG THIN LINE SHALL REPRESENT THE POSITIVE POLE & THE SHORT THICK LINE THE NEGATIVE POLE.	OR

Nº	DESCRIPTION	WIRING SYMBOL
2113	INSULATING RAIL JOINTS, TRACK CIRCUIT IN BOTH DIRECTIONS. TRACK RELAY AT LOCATION.	RB RN TN TB
2114	INSULATING RAIL JOINTS, TRACK CIRCUIT ON LEFT NONE ON RIGHT.	RB RN
2115	INSULATING RAIL JOINTS, TRACK CIRCUIT ON RIGHT NONE ON LEFT.	TN TB
2116	SIGNALLING TRACK CIRCUITS SUPERIMPOSED ON ELECTRIFIED SECTIONS WITH COMMON RETURN RAIL, OR TRACK CIRCUIT ON STEAM SECTIONS WITH ONE COMMON RETURN RAIL.	TB TN RB RN
	INSULATING RAIL JOINTS. TRACK RELAY IN SIGNAL BOX.	RB RN TN TB

Nº	DESCRIPTION	SYMBOL
2220	LOCATION BOX. CONTENTS AS SHOWN OR STATED.	
2222	IMPEDANCE BOND.	SEE BS 376: PART 1.

TRACK PLAN - TYPICAL (FARLEY DOWN)

SCALE :- 1 INCH = FEET.

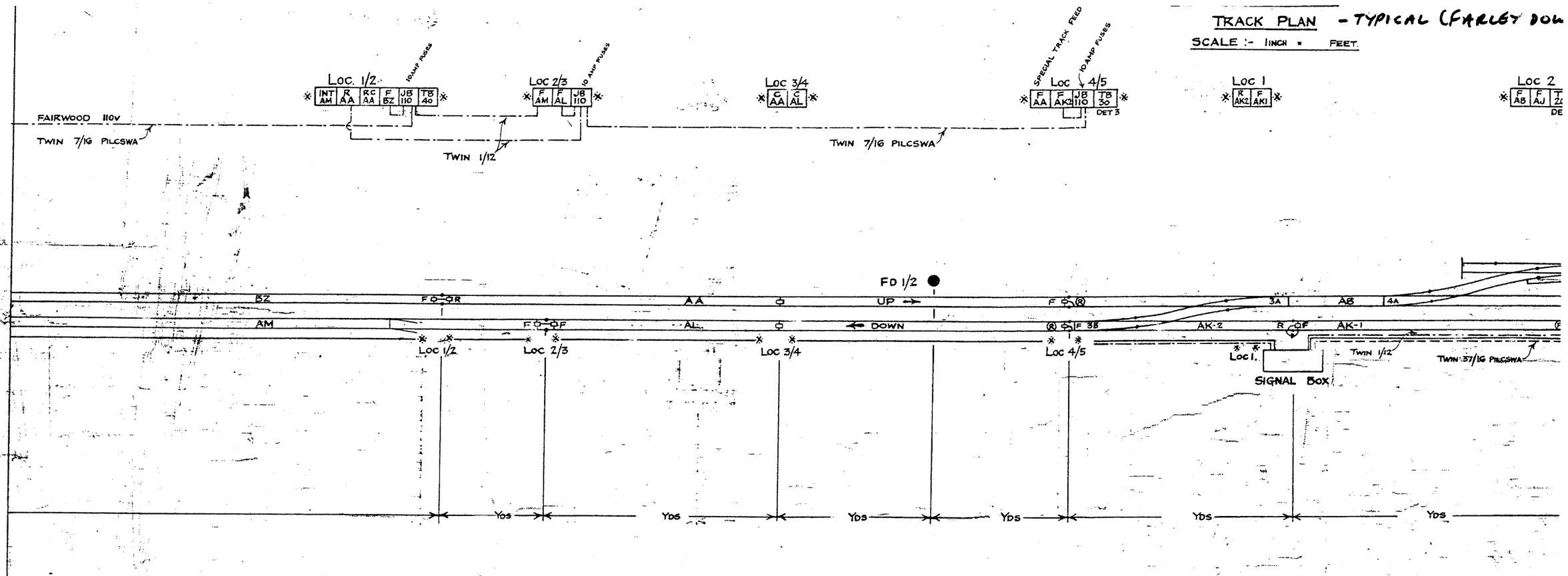

FOR CONTINUATION
SEE FAIRWOOD 19894 P.

TOTAL NUMBER OF TRACK CIRCUITS :- 3 SINGLE 7 DOUBLE.
TOTAL MILEAGE :- MILES YARDS.
——— = MULTICORE CABLE
- - - - = 220V MAIN SUPPLY CABLE
—·—·— = 110V SUB-MAIN SUPPLY CABLE.

FOR SUPPLY ARRANGEMENTS AT
SIGNAL BOX SEE DIAG. Nº .....

24.6.42

TRACK PLAN - TYPICAL (FARLEY DOWN)

SCALE :- 1 INCH = FEET.

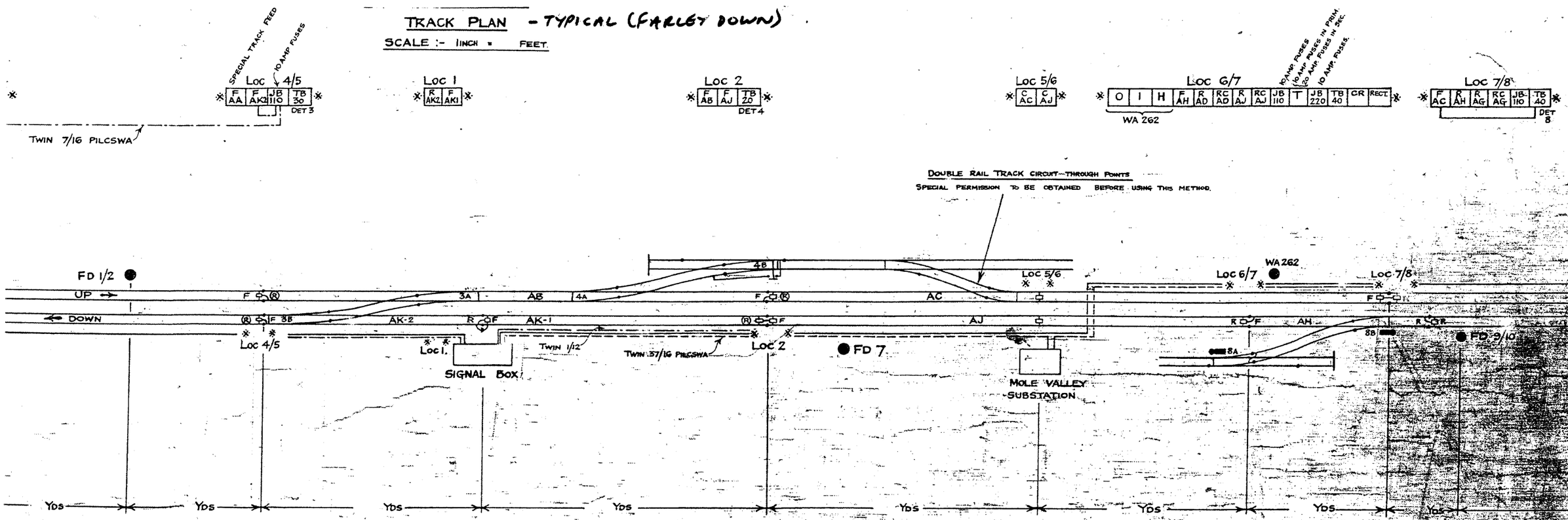

INGLE 7 DOUBLE.

MILES YARDS.

FOR SUPPLY ARRANGEMENTS AT SIGNAL BOX SEE DIAG. Nº .....

SUBSTATION 220v. 50 CYCLE SUPPLY.

AEROFLEX FUSE BOX ON WALL.

FUSES 1&2 :- FEEDER TO LOC 6/7 LOAD :- 1 AMP FUSES 15 AMP

FUSES 3&4 :- " - " SIGNAL BOX " :- 15 " " 50 "

E 99 P.