INDEX

1. MISCELLANEOUS
2. "
3. LINE CLEAR RELEASE & SECT. C.A.G. CIRCUITS.
4. HNC & NC. CIRCUITS.
5. T.C. CONTROL OF BLOCK.
6. WELWYN CONTROL.
7. ELECTRIC DETECTION.
8. SIGNAL LIGHT & REPEATER CIRCUITS.
9. ARM REPEATER CIRCUIT.
10. TOKENLESS BLOCK.
11. DOUBLE JUNCTION.
12. TESTING OF LOCKING. (DISTANT & STOP SIG, SEQ. LOCK.)
13. TESTING CONTROLS IN A BLOCK CIRCUIT.
14. TESTING A L.C.R.
15. BLOCK SWITCH ARRANGEMENT. (3 - POS. BLOCK)
16. OVERLAPS & BELL CODES.
17. G.C.R. RELAY.
18. SGE. TYPE HE 301 DETECTOR (R.H.)
19. " " " " " (L.H.)
20. COIL & CONTACT ARRGT.
21. SGE TYPE BN. THERMAL TIME RELAY UNIT.
22. BRB. SPEC. 949.
23. POTTER & BRUMFIELD SPECIAL KAP RELAYS (SPEC.)
24. CLAMP LOCK MOTOR CIRCUITS.
25. TREADLES.
26. (1). (2). (3). APPROACH & BERTH TRACK LOCKING.
27. (1) (2) TOKENLESS BLOCK STANDARDS. - METHOD OF PREPARING DIAGRAMS.
28. BELL UNIT No 1 - MOD. FOR LONG SECTION WORKING.
29. (1). (2). (3). SETTING UP OF ASTER TRACK CIRCUITS.
30. (1). (2). HW. POINT MACHINES. - INTERNAL WIRING.
31.
32.
33.
34.
35.
36.
37.
38.
39.
40.
41.
42.
43.
44.
45.
46.
47.
48.
49.
50.

1. ELECT. LIT SIGNALS – VOLTAGE TO BE KEPT BETWEEN 3·5 – 4·0V.

2. TR TO BE LOCATED IN CUPBOARDS AT LINESIDE, UNLESS END OF T.C. IS WITHIN 10 YDS. OF S.B.

3. SERIES RESISTANCE FOR T.C. — PRIMARY CELLS (0·5 – 7·6Ω) IN ½ Ω STEPS.
SECONDARY CELLS (1 – 15Ω) IN 1 Ω STEPS.

4. PRIMARY FEED TO BE GIBA. INERT CELLS IN PARALLEL.

5. T.C. INDICATIONS ALL TC's EXCEPT THOSE LOCKING FPL LEVERS, TO BE INDICATED IN S.B. BY MEANS OF LIGHTS. WHERE T.C.'s DOES NOT EXCEED 4 SEPARATE INDICATORS MAY BE USED.

6. WHERE POWER AVAILABLE 30AH PLANTE CELLS TO BE USED.

7. WHERE NO POWER, TPR's TO HAVE SEPARATE BATTERIES. WHERE A SUPPLY IS AVAILABE TPR's MAY BE FED FROM SAME BATTERY.

8. "BLIND SPOTS" NOT TO EXCEED 8'6".

9. MAX. LENGTH OF T.C. 880 YDS.

10.

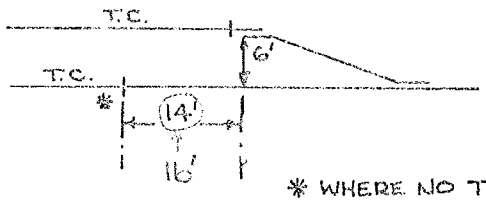

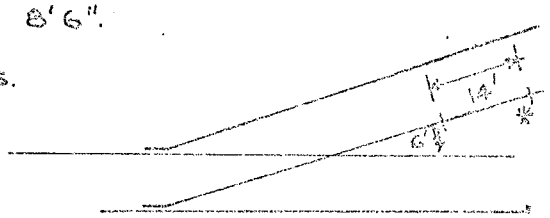

* WHERE NO TRAP POINTS PROVIDED.

11. STANDARD LEVER LOCK SGE. TYPE GA.

12. CON. BOXES. ON. – 5° ABOVE OR BELOW HORIZONTAL.
OFF. – 36° TO 65° ABOVE OR BELOW HORIZONTAL.
WRONG. – FROM 5° TO 36° AND MORE THAN 65°.

13. DETECTION RELAY. – 1000Ω. 4F/B, 4N/R.

14. SEPARATE BATTERY FOR EACH DETECTION CCT. – 8 DRY CELLS HOUSED IN No. 2 BATTERY CUPBOARD. MAX. NO. OF CCT. FED FROM TRICKLE CHARGE BATTERY IS 4.

15. DETECTION INDICATION TYPE 240 STENCILLED N, R, TO BE USED. LAMPS SHALL BE 12V. 2·4W (SL. 29) IN SERIES WITH 20Ω.

16. RELAY TO BE USED IF G.F. IS MORE THAN ½ MILE FROM S.B. RELAYS TO BE NEUTRAL LINE TYPE 1000Ω. CLASS B. 2F/B.

17. G.F. BATTERY TO BE AS NEAR TO SINGLE SLIDE DETECTOR AS POSSIBLE.

18. SEE CABLE TESTING STI. No. 35.

19. ILLUMINATED DIAGRAMS

THE FOLLOWING DETAILS TO BE SHOWN IN THE BOTTOM RIGHT-HAND

19 (cont.)

MARGIN OF NEW ILLUMINATED DIAGRAMS DRAWINGS.

(a) OVERALL SIZE OF DIAGRAMS.

(b) STATE WHETHER "TEMPORARY" OR "PERMANENT".

(c) NR. OF TRACK CIRCUITS.

CIRCLE FOR BULB HOLES SHOULD BE DRAWN ONE 1/2". DIA.

DIAGRAMS SHOULD BE DRAWN TO THE FOLLOWING STANDARD SIZES :-

(1) 5' 0" × 22"

(2) 6' 0" × 22"

(3) 7' 8" × 22"

(4) 9' 8" × 22"

BORDER LINE AT CORNERS ONLY.

ONE ILLUMINATED DIAGRAM PER 100 LEVERS.

20. SIGNAL LAMP IN C.L. TERRITORY S.L. 17. INTERNALLY CONNECTED IN PARALLEL. MAIN FILAMENT 12V. 16W.

AUX. FILAMENT 16V. 12W. (AT 12V. IS 9W)

AVERAGE LIFE 1000 HRS.

21. SIGNAL LAMP - ISOLATED SIGNALS, 3-POLE.

SL.34 TWO INDEPENDENT FILAMENTS. MAIN. 12V. 16W. AUX. 12V. 24W.

HIGHER RATING OF AUX. FILAMENT COMPENSATES FOR IT BEING SLIGHTLY OUT OF FOCUS. LAMP VOLTAGE TO BE 11·5V.

21a. SIGNAL LAMPS - ISOLATED SIGNALS.

NEW STANDARD LAMP TO BE SL.35 24/24W.

0·25Ω RESISTOR TO BE CHANGED TO 0·108Ω. WHEN LAMPS ARE CHANGED FROM SL.34 TO SL.35.

LAMP VOLTAGE TO BE 11·5V AND 13·2V. AT BATTERY.

OR 11·5V. AND 16·0V. AT BATTERY.

22. SL.33 USED FOR JUNCTION INDICATORS POWER SIGNALLING -110V. 25W.

23. TRACK CCTS. TO BE TERMINATED AT 1ST. SUITABLE RAIL JOINT BEYOND THE CLEARING POINT.

24. SPT. NOT MOUNTED ON POST TO BE NOT LESS THAN 6' AND NOT MORE THAN 15' FROM POST.

L.C.R. RELEASE

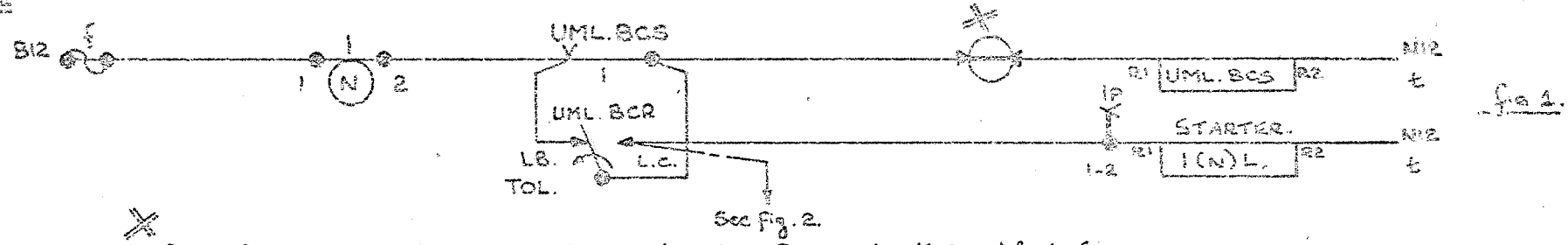

fig 1.

Special. Contacts to break before and make after contacts in block line.

LCR is to prevent pulling of starting signal unless acceptance received for each train. The above circuit is a one pull feature. For one train feature use front contact of TPR (track ahead) in place of normal bands.

SECT. C.4.6.

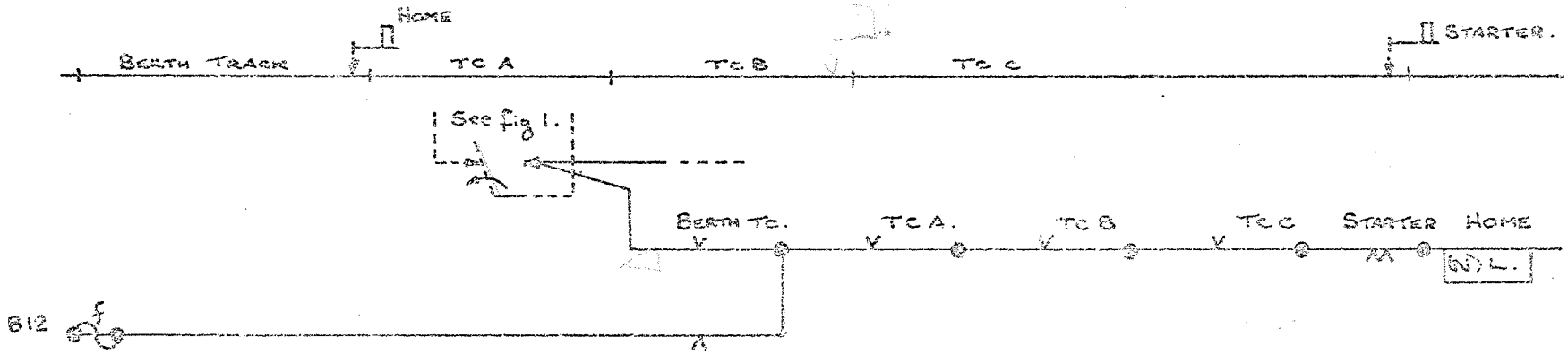

fig 2

HNC & NC To enforce and prove replacement of signal before following train can be accepted.

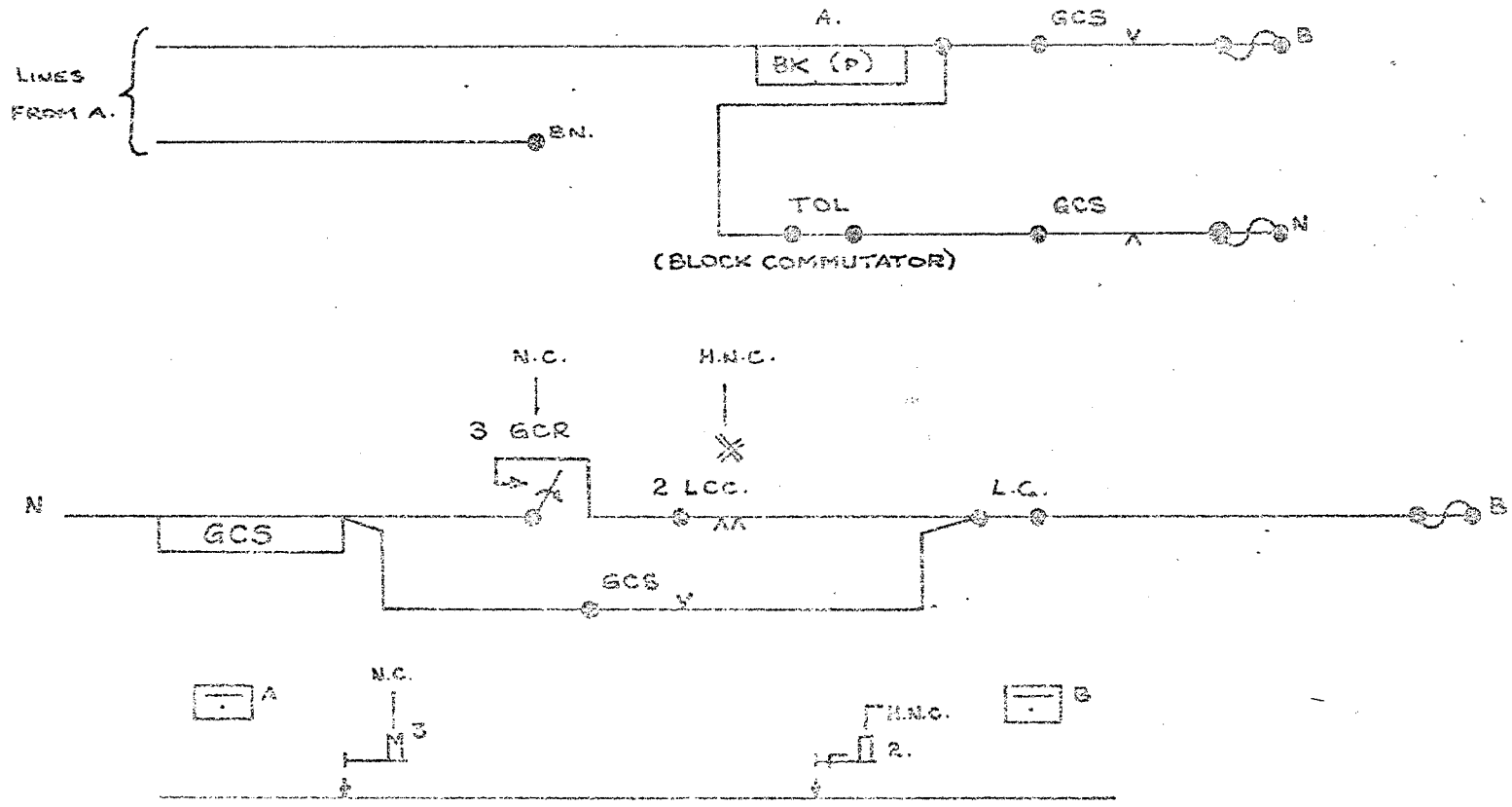

✱ IF NO LOCK ON SIGNAL BANDS TO BE USED.
IF 2 > 440 yds. FROM B OR NOT CLEARLY VISIBLE, ARM TO BE PROVED ALSO.

T.C. CONTROL OF BLOCK.

To cancel line clear if s'man forgets & to enforce correct operation of block.

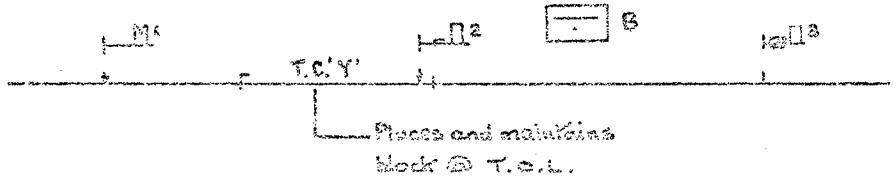

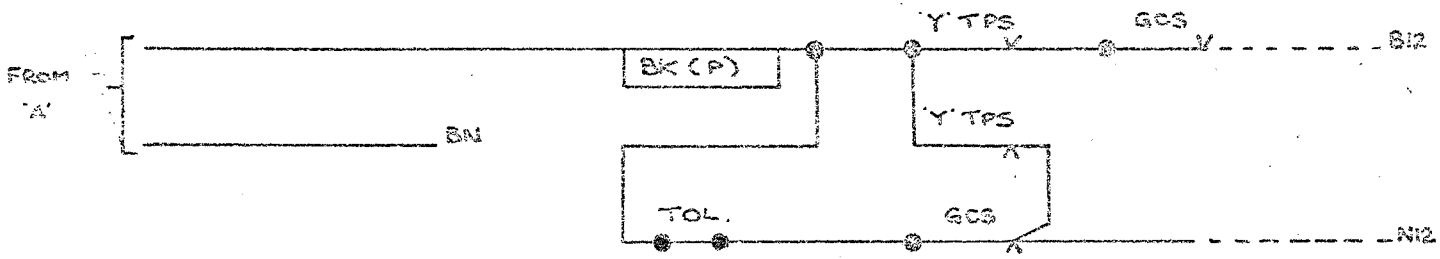

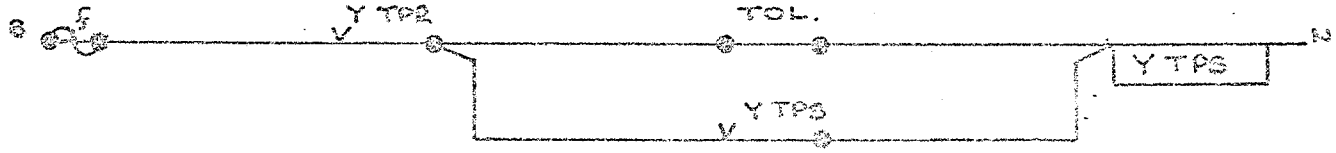

SEQUENTIAL LOCKING

To enforce replacement of starting (and intermediate) signal after passage of train.

This can also be done mechanically (MSL).

WELWYN CONTROL: To ensure that after acceptance (L.C.) train must actually pass through and clear section before another can be accepted. Requires: GCS & TPS and has time release for cancellation.

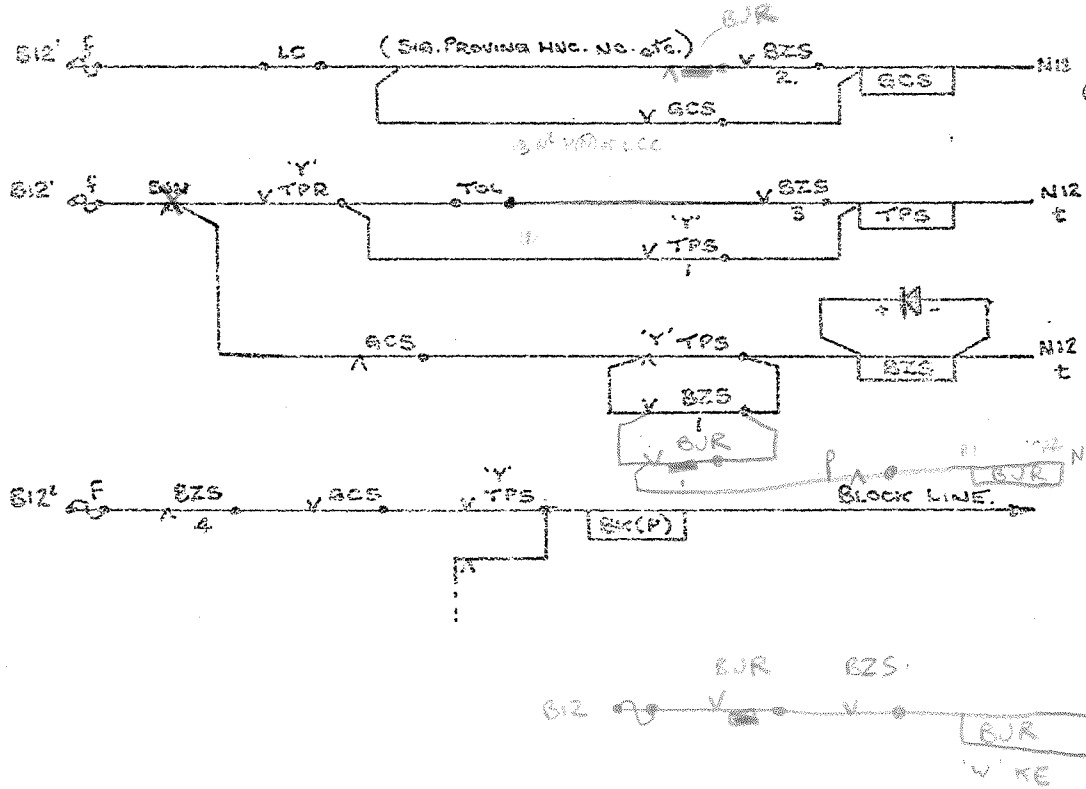

(1) AT NORMAL: BZS ↑ GCS ↓ TPS ↑

(2) COMM. TO LC: IF HNC AND NO CORRECT GCS PICKS OVER BZS BZS THEN DROPS AND +VE SENT TO LINE OVER BZS ↓ GCS ↑ TPS ↑ AND BK.

(3) COMM. TO TOL: GCS DROPS AND -VE TO LINE AS NORMAL.

(4) TRAIN OCC. T.C. Y: TPR & TPS DROP, BZS PICKS OVER GCS ↑ TPS ↓ — TOL TO LINE MAINTAINED BY TPS (SEE PAGE 5)

(5) TRAIN CLEARS TC Y: TPR PICKS, TPS PICKS, VIA TPR ↑ COMM. AT TOL, BZS ↑ — TOL. TO LINE MAINTAINED BY COMM.

(6) BLOCK TO NORMAL.

CANCELLING

(1 – 3) AS ABOVE.

(4). TIME RELEASE OPERATED DROPS 'Y' TPS AND AFTER TIME ALLOWS BZS AND THEN Y TPS PICKS.

(5) BLOCK TO NORMAL.

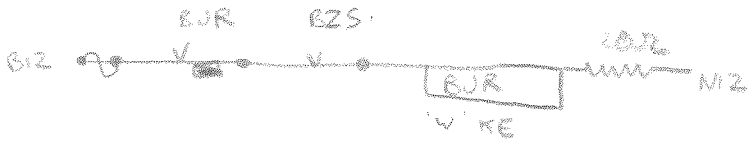

R.R. 827

ELECTRIC DETECTION

SINGLE ENDED

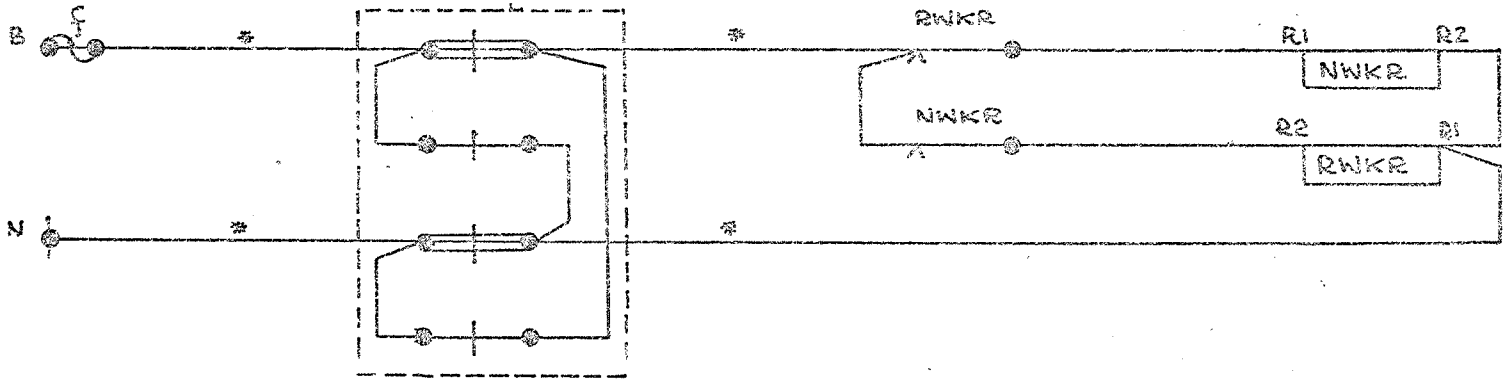

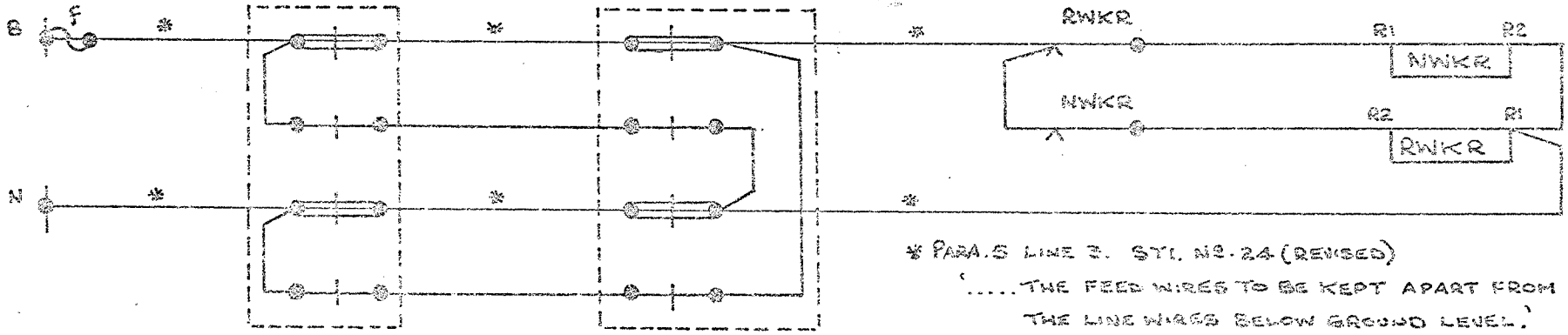

* PARA. 5 LINE 3. STI. No. 24 (REVISED)
'.....THE FEED WIRES TO BE KEPT APART FROM THE LINE WIRES BELOW GROUND LEVEL.'

SIGNAL LIGHTING & REPEATER CIRCUITS

SIGNAL BOX.

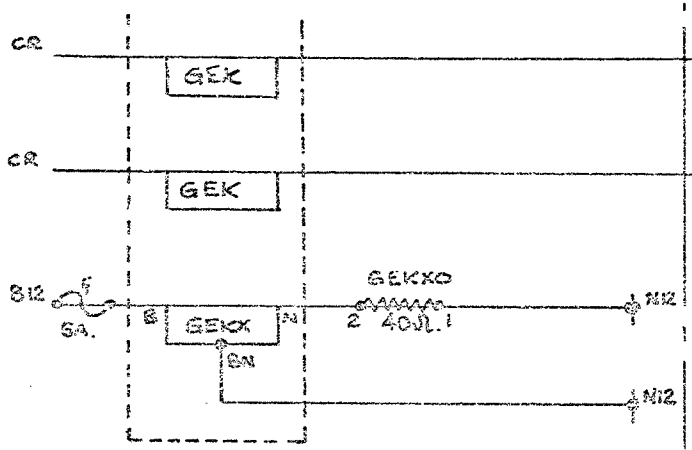

LOCATION

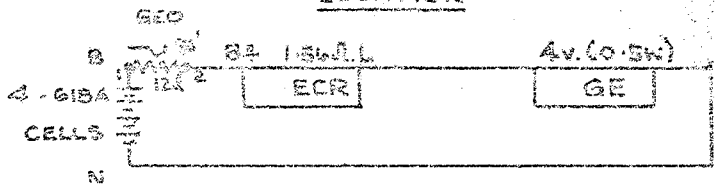

* TO BE ADJUSTED TO GIVE 3.8v. AT LAMP.

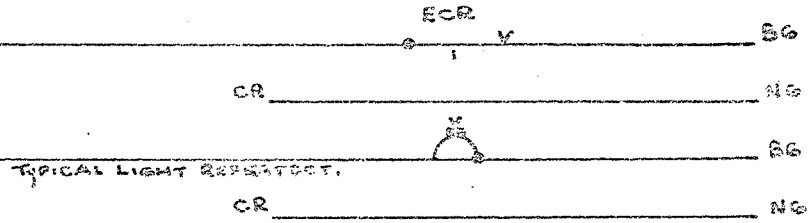

TYPICAL LIGHT REPEATER.

BR 887

ARM REPEATER CIRCUIT

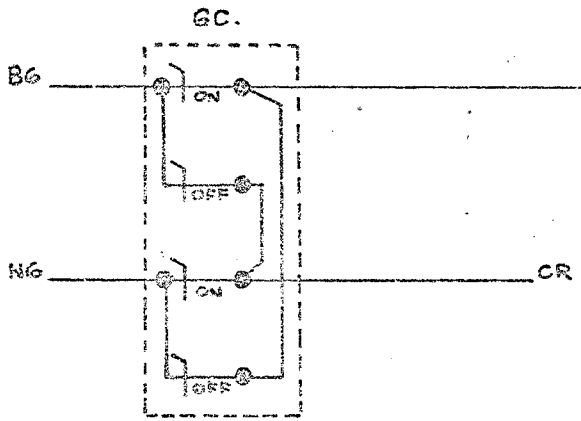

SIGNAL BOX

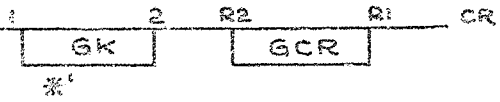

*' IF NO RELAY USED (ie GCR) THEN GK SHOULD BE A 200Ω INDICATOR.

WHEN RELAY IN CIRCUIT USE A 50Ω INDICATOR IN SERIES WITH RELAY.

Rev. 1974

TOKENLESS BLOCK (MODE OF SIGNALLING)

A SENDING TRAIN TO B

A - CALLS ATTENTION TO B WITH ONE BEAT OF BELL.

B - ACKNOWLEDGES CALL ATTENTION WITH ONE BEAT OF BELL.

A - ASKS B 'IS LINE CLEAR'

B - TURNS ACCEPTANCE SWITCH TO 'REVERSE' AND ACKNOWLEDGES 'IS LINE CLEAR' SIGNAL

A - HOLDS IN RINGING KEY FOR 5 SECS.

B - REPLIES WITH A 5 SEC. PLUNGE.

A - SENDS 'TRAIN ENTER SECTION' SIGNAL.

B - ACKNOWLEDGES 'TRAIN ENTERING SECTION SIGNAL' IN THE NORMAL MANNER.

ONCE A TRAIN HAS PASSED SIGNAL AT A, IT CANNOT BE CLEARED OFF BLOCK UNTIL IT HAS ARRIVED AT B, OCCUPIED AND CLEARED THE OVERLAP TRACK OF THE HOME SIGNAL AND OPERATED THE TREADLE WITH THE HOME SIGNAL IN THE OFF POSITION

B - CALLS ATTENTION TO A WITH ONE BEAT.

A - ACKNOWLEDGES CALL ATTENTION WITH ONE BEAT.

B - TURNS ACCEPTANCE SWITCH BACK TO 'NORMAL' AND CALLS ATTENTION.

B - GIVES 'TRAIN OUT OF SECTION' SIGNAL HOLDING IN LAST BEAT FOR 5 SECS.

A - ACKNOWLEDGES 'TRAIN OUT OF SECTION' SIGNAL AGAIN HOLDING LAST BEAT.

A - THIS LAST LONG BEAT IS NOT REQUIRED FOR CIRCUITRY BUT ESTABLISHES A PATTERN OF BELL SIGNALLING.

RELAY OPERATION

BOX A.		BOX B
NORMAL	→ IS LINE CLEAR →	NORMAL
NORMAL	← ACKS AND TURNS COMM. ←	NORMAL
NORMAL	→ LONG PLUNGE →	TRAIN COMING FROM RLR +
TRAIN GOING TO RPR+ SR+	← LONG PLUNGE ←	TRAIN COMING FROM RLR+
RPR+ SR-	→ SR →	RLR+ ZSR - NLR-
RPR+ SR-	→	HR TO A RLR+ ZSR - NLR-
RPR+ SR-	→	A TO B RLR + ZSR + NLR-
RPR+ SR-	→	B TO RLR + ZSR+ NLR-
NPR2 RPR-SR+	← RESTORES COMM. AND CLEARS BACK. ←	(NORMAL) RLR - ZSR - NLR+
SR + NLR+	→ ACKS. CLEARS BACK →	NLR+ SR+

EXAMPLE OF DOUBLE JUNCTION

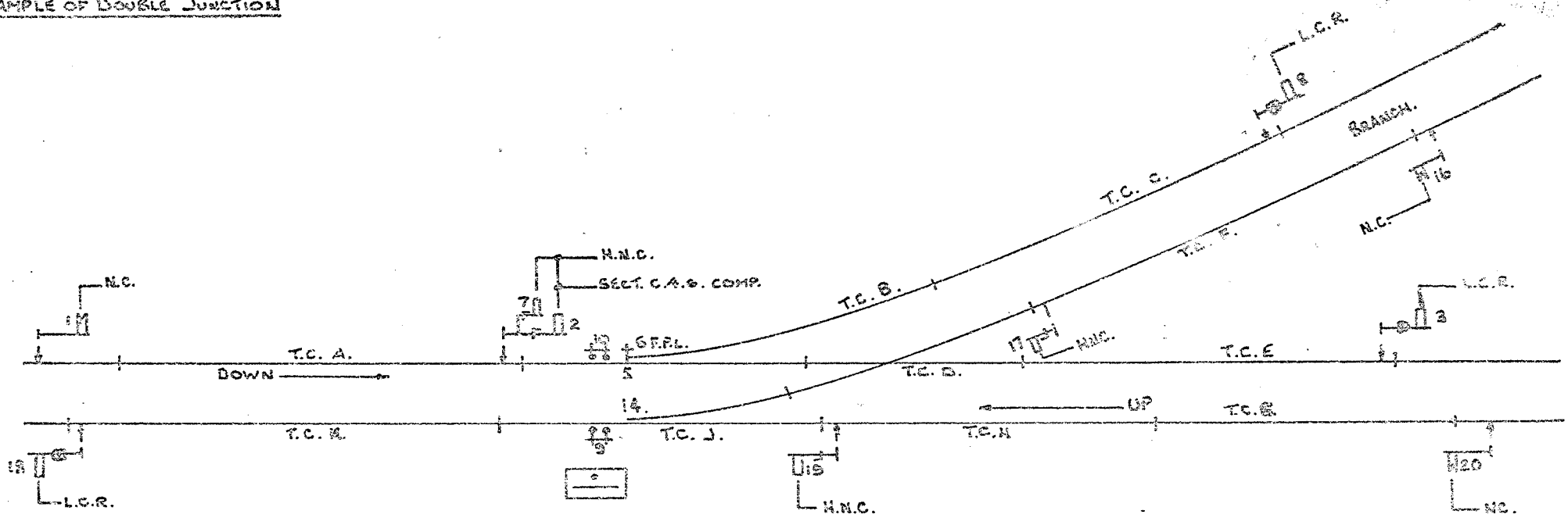

SPARES: 4. 11. 12. 13. 15.

ADDITIONAL INFORMATION REQUIRED TO BE ON SCHEME PLAN :-

GRADIENT PROFILE
SCALE
PLACE-NAME
ESL OR MSL
LEVER DATA.
GEOGRAPHICAL LOCATION DIAGRAM.
PLAN TITLE.

R.K.B.Z

Rd
1.3.14.

Testing of Locking.

Distant Signal.

1. Try distant signal. Should be locked.
2. Pull the relative home lever and try distant lever again.
3. Replace home and pull starter. Distant still be locked. Proving single cuts.
4. Pull home, pull starter and once more try distant which should now be free.
5. After pulling distant see that home and starter are back locked.
6. Replace distant lever, replace home, try home – should be locked. Try distant.
7. Replace starter, try starter should be locked, try home should be free, try distant should be locked.

Stop Signal

1. First set up the road and if stop signal is released by other levers prove the releasing correct as in the case of distant levers.
2. See that all conflicting point and signal levers both in advance and rear of the signal under test, are locked.
3. Replace signal lever and pull over each conflicting point lever in advance separately and see if signal lever is lock.
4. Replace the last point lever pulled and try each conflicting signal lever with the signal lever under test normal. Each such conflicting lever may require other levers to be pulled before it can itself be moved.
5. Rear points should be tried in the normal and reverse positions with the signal lever reversed to see if bothways locking is correct.

Sequential Locking.

1. Pull starter. try home which should be locked.
2. Gradually restore starter and at same time, try to pull home. Home should not become free until starter is fully restored. Ensure that mech. locking is effective before electric controls.

Method of testing controls in a Block Circuit

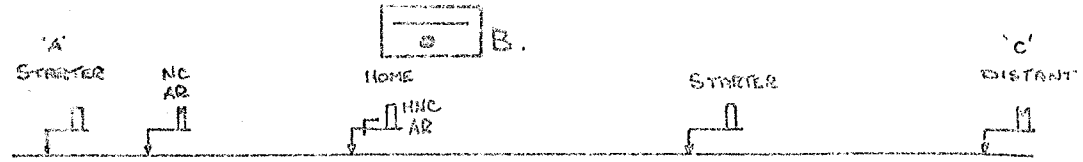

Block Controls

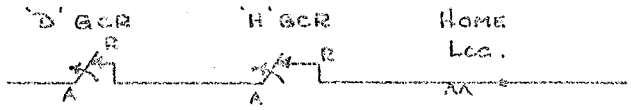

'B' sending L.C. to 'A'

(1). Check continuity between blocks.

2. B asks C for L.C. then takes off road (i.e home, starter, dist.)

3. B pegs L.C. to A (B's pegget remains @ LB.)

4. B replaces distant (watching arm repeater indication) (B's pegget remains @ LB & GCR goes reverse)

5. B replaces home, 'H' GCR goes reverse, and LCC make up (if no LCC: bands make up) B's pegget goes to LC. When B's home has lever band in LCR circuit, put home back slowly and listen for sequential dropping in. Watch block indicator the LC. should not show until after sequential is made and home is locked.

6. Confirm that A's non-pegget goes to LC. and that A can now pull his starter off.

7. The block controls should now be tested individually as follows:

(a) B's signals all normal and block normal.

(b) Drop 'D' GCR at links then peg L.C. (no indication)

(c) Pick up GCR - pegget should go to L.C.

(d) Repeat for home GCR.

(e) Repeat this process by breaking home LCC springs.

(f) If lever bands are used in control circuit repeat process by breaking lever bands.

Method of Testing a LCR Circuit

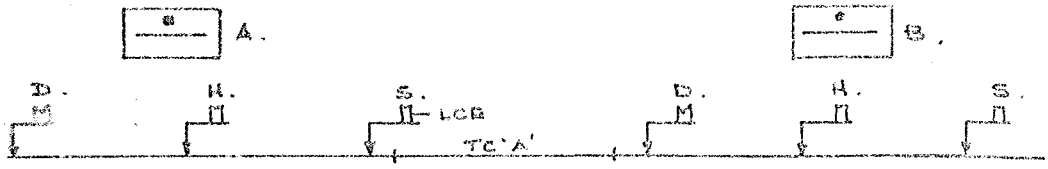

1. Check continuity between blocks (ie peg L.C. TOL & L.B for continuity and vice versa)
2. With all levers normal and block normal try starter (should be locked).
3. Ask B for L.C. (confirm B's pegged @ L.C. and A's non-pegged at L.C.)
4. A pulls starter.
5. (a) One pull feature :- Replace starter and try to pull it again (should be locked due to stick relay having dropped out. The stick relay will not pick up again until you replace block through TOL. and LB sequence).
   (b) One train feature :- Drop TC 'A' and then replace starter lever and try to pull it again (should be locked.)
6. Get another L.C. from B.
7. Pull off road (ie home, starter & distant)
8. Replace distant, then replace home slowly until mech. sequential is effective.
9. Try and pull home again with starter still off. (should be locked due to sequential).
10. In the case of electrical sequential it is not necessary to replace home slowly.

BLOCK SWITCH ARRANGEMENT - THREE POSITION BLOCK

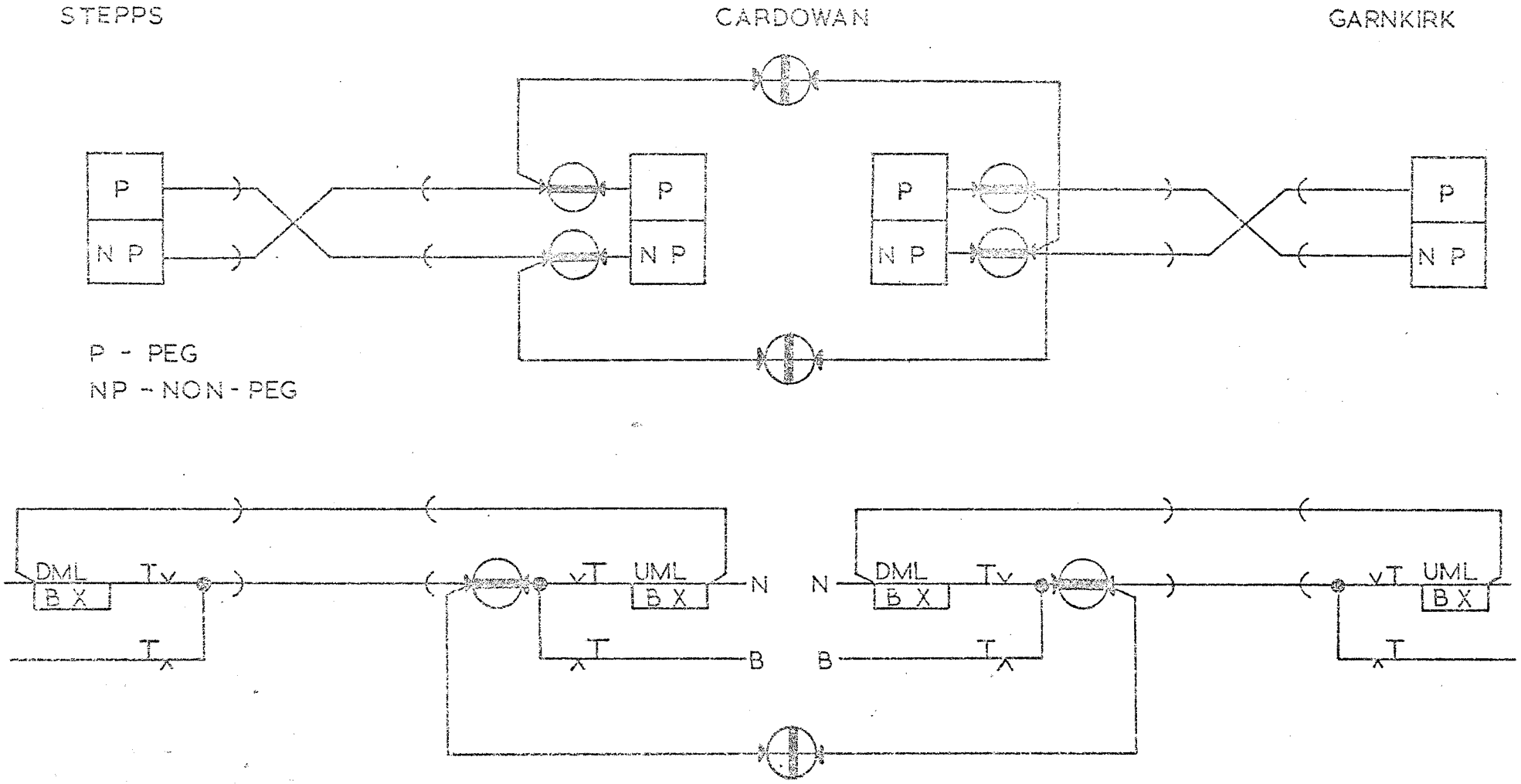

J.D.K. 25.5.71.

BR 887

SEE SSP 20

Overlaps.

In C/L. signalling territory overlaps should be provided and controls effected in accordance with the following:-

1. No separate o/lap t.c. is to be provided unless it is req. for other purposes.
2. The basic o/lap lengths are :-
   300 yds. in 2/3 aspect territory
   200 yds. in 4 aspect territory. to be adjusted as necessary on account of gradient and/or other factors.
3. Where restricted approach arrangements are in operation an overlap of 50 yds. should be provided where applicable. There will be special cases where reduction of this distance will be necessary.
4. The restricted approach should be subject to proximity and speed consideration.
5. Trailing points in the overlap and opposing signals applying to the overlap must be locked until the route is cancelled or the move has come to a stand.
6. Facing points in the o/lap may be moved if they have time to operate and alternative o/lap available.

Bell Codes.

Call attention :- 1 beat.
Is line clear :- 4 consect.
Train entering sect :- 2 consect.
Train approaching :- 1 - 2 - 1.
Cancelling :- 3 - 5.
Warning acceptance :- 3 - 5 - 5.
Train out of sect. :- 2 - 1.
Train passed without tail - lamp } 9 consect. to advance box. 4 - 5 to box in rear.
Train divided :- 5 - 5.
Testing block indic. and bells. } 16 consect.

GCR — 250Ω. 1N/R BIASED RELAY

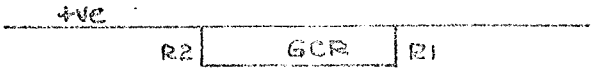

+VE TO R2 CAUSES RELAY TO GO TO R
THE A-R CONTACT IS USED TO PROVE SIGNAL ON.

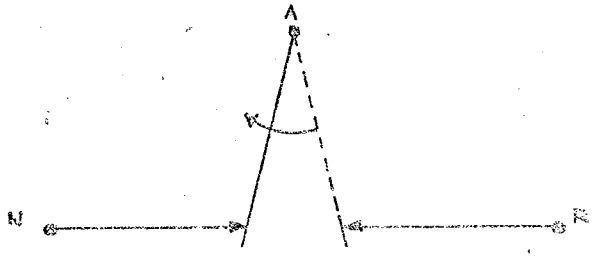

A DISCONNECTION IN THE CIRCUIT WILL CAUSE A RIGHT-SIDE FAILURE i.e. THE BIAS CAUSES THE ARM TO GO TO NORMAL AND BREAKS THE CIRCUIT.

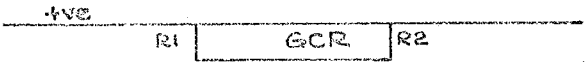

+VE TO R1 HOLDS RELAY TO N.
WHEN SIGNAL OFF, -VE CAUSES RELAY TO GO TO R. THE A-R CONTACT USED TO PROVE SIGNAL OFF.

S.G.E. TYPE H.E. 301 DETECTOR.

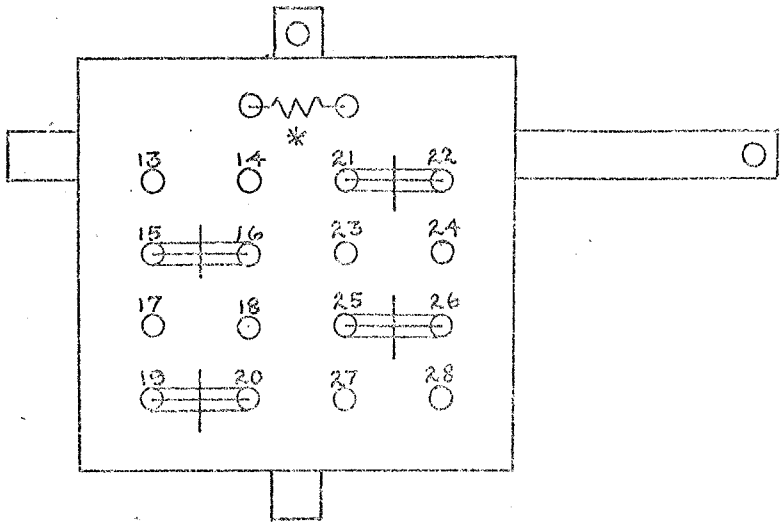

* 600Ω-30 WATT (110V). TUBULAR HEATER

R.H. BLADE CLOSED, F.P.L. IN.

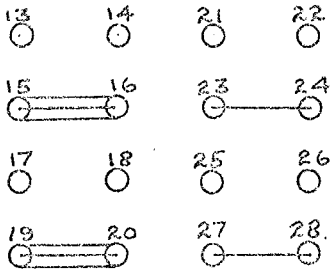

R.H. BLADE, CLOSED F.P.L. OUT.

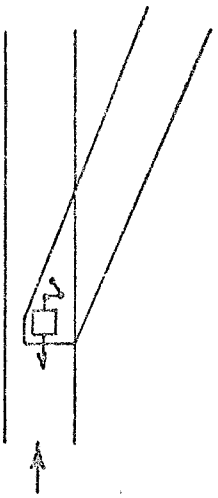

SHEET 1 OF 2.

B.R. 887.

JDK. 6.9.73.

S.G.E. TYPE H.E. 301 DETECTOR.

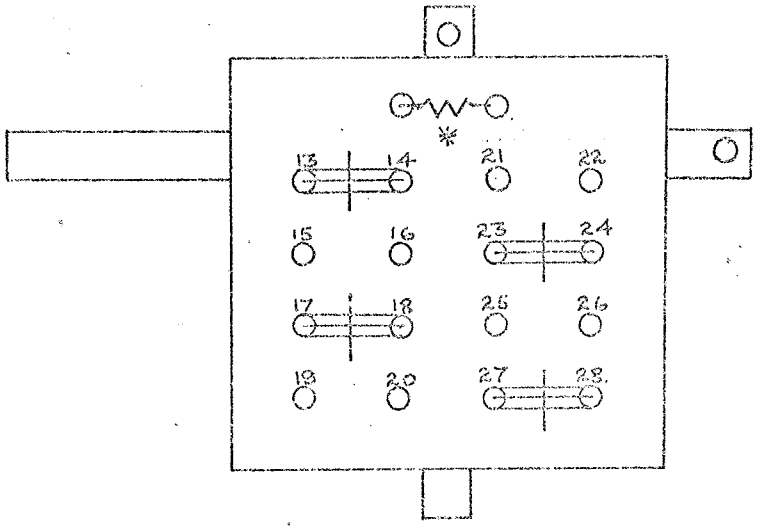

* 600Ω-30 WATT (110V) TUBULAR HEATER

L.H. BLADE CLOSED, F.P.L. IN.

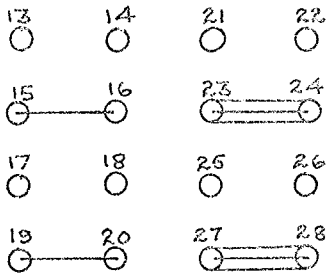

L.H. BLADE, CLOSED F.P.L. OUT.

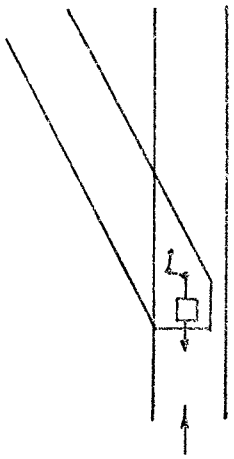

SHEET 2 OF 2.

BR 887

J.D.K. 6-9-73.

COIL AND CONTACT CONNECTION NUMBERING COMPLYING WITH B.R. SPECIFICATIONS

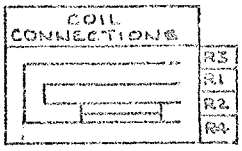

16 FRONT

	A1	A3	A5	A7	B1	B3	B5	B7	C1	C3	C5	C7	D1	D3	D5	D7
	A2	A4	A6	A8	B2	B4	B6	B8	C2	C4	C6	C8	D2	D4	D6	D8

12 FRONT — 4 BACK

	A1	A3	B1	B3	B5	B7	C1	C3	C5	C7	D1	D3		A5	A7	D5	D7
	A2	A4	B2	B4	B6	B8	C2	C4	C6	C8	D2	D4		A6	A8	D6	D8

8 FRONT — 8 BACK

	A1	A3	B1	B3	C1	C3	D1	D3		A5	A7	B5	B7	C5	C7	D5	D7
	A2	A4	B2	B4	C2	C4	D2	D4		A6	A8	B6	B8	C6	C8	D6	D8

8 FRONT — 4 BACK

	A1	A3	B1	B3	B5	B7	D1	D3		A5	A7	D5	D7
	A2	A4	B2	B4	B6	B8	D2	D4		A6	A8	D6	D8

6 FRONT — 6 BACK

	A1	A3	B1	B3	D1	D3		A5	A7	B5	B7	D5	D7
	A2	A4	B2	B4	D2	D4		A6	A8	B6	B8	D6	D8

4 FRONT — 4 BACK

	A1	A3	D1	D3		A5	A7	D5	D7
	A2	A4	D2	D4		A6	A8	D6	D8

8 FRONT. — 4 BACK

	A1	A3	B1	B3	C1	C3	D1	D3		A5	B5	C5	D5
	A2	A4	B2	B4	C2	C4	D2	D4		A6	B6	C6	D6

QSP A1 RELAY ONLY.

R.W. 24-5-74.

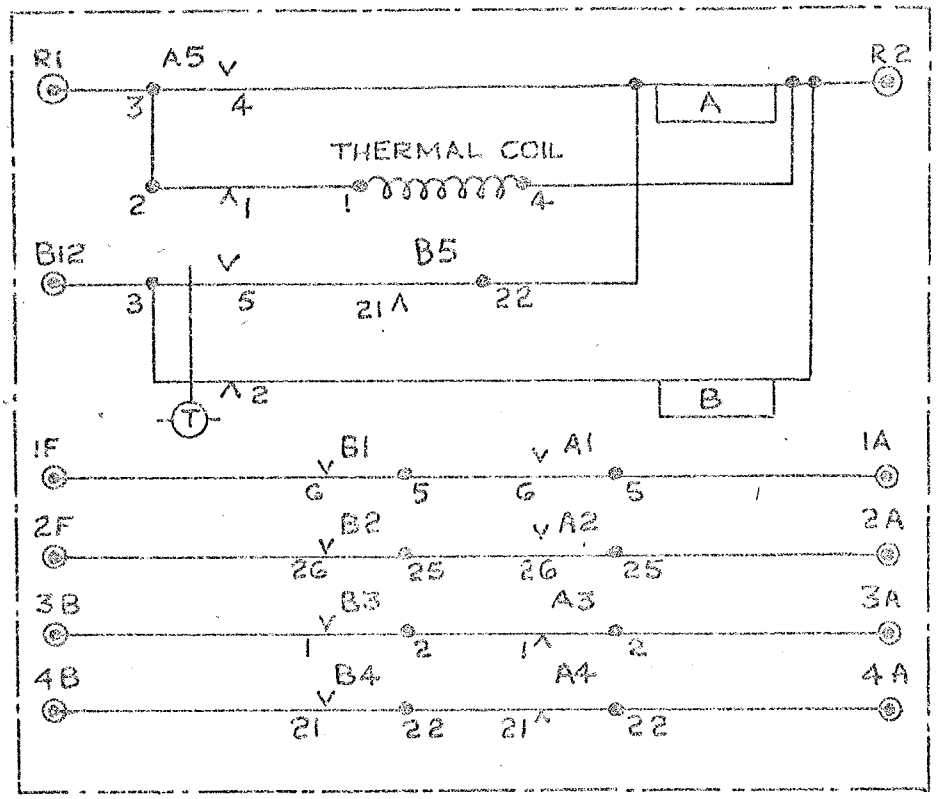

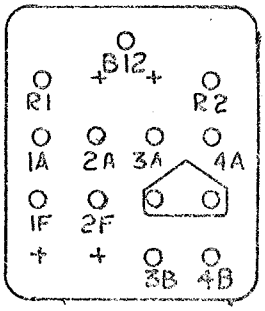

DETAILS OF UNIT TOP

EXTERNAL ADJUSTMENT

SGE. TYPE BN. 12v. 30-120 secs.

THERMAL TIME RELAY UNITS

BR 887

R.W. 24·5·74.

B.R.B. SPEC. 949

MINIATURE D.C. NON-SAFETY TIME DELAY RELAY UNIT, PLUG-IN TYPE FOR USE IN POINT CONTROL CIRCUITS.

DELAY TIME 6 – 9 SECS.

CODE No.	VOLTAGE	CONTACT ARRANGEMENT.	
6046	24	1F.	3B.
6047	50	1F.	3B.

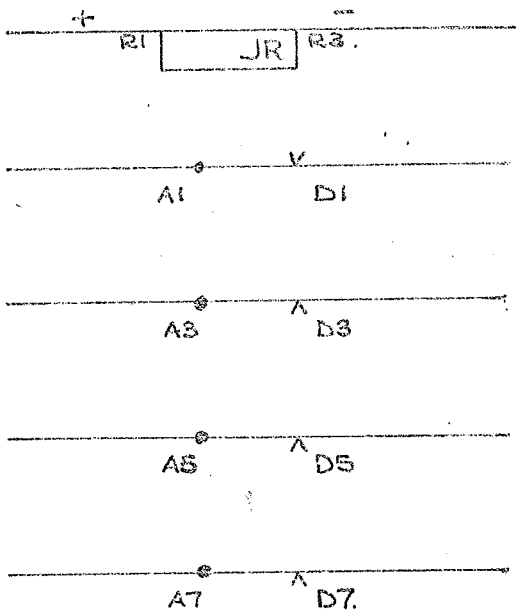

POTTER & BRUMFIELD (SPECIAL KAP RELAY)
(KA 25060 - SIGNAL HEAD)

NOMINAL CURRENT - 1.4A. 50HZ.
CONTACT ARRANGEMENT - 2 C/O
CONTACT RATING - 5A.
(COIL TYPE 5KRK 43)
COIL RESISTANCE AND TOLERANCE - 0.28Ω.
OPERATING AMPS ~ (1.2 - 1.22A)
N/C CONTACT FORCE 20 GRAMMES. MIN.
CONTACT GAPS 0.005" MIN.
RELAY TO OPERATE WITHIN RANGE AND MUST NOT BUZZ AT 2A. (1.6V AC. ≡ 2A)

POTTER & BROOMFIELD (SPECIAL KAP RELAY)
(SIMILAR TO STANDARD RELAY KAP 11AG - 6V)

NOMINAL VOLTAGE - 6V. AC.
CONTACT ARRANGEMENT - 2C.
CONTACT RATING - 10A.
OPERATING VOLTAGE - 50V. MAX.
N/C. CONTACT FORCE - 20 GRAMMES. MIN.
CONTACT GAP - 0.012" MIN.
ARMATURE GAP. - 0.005" MIN.

RW
1974.

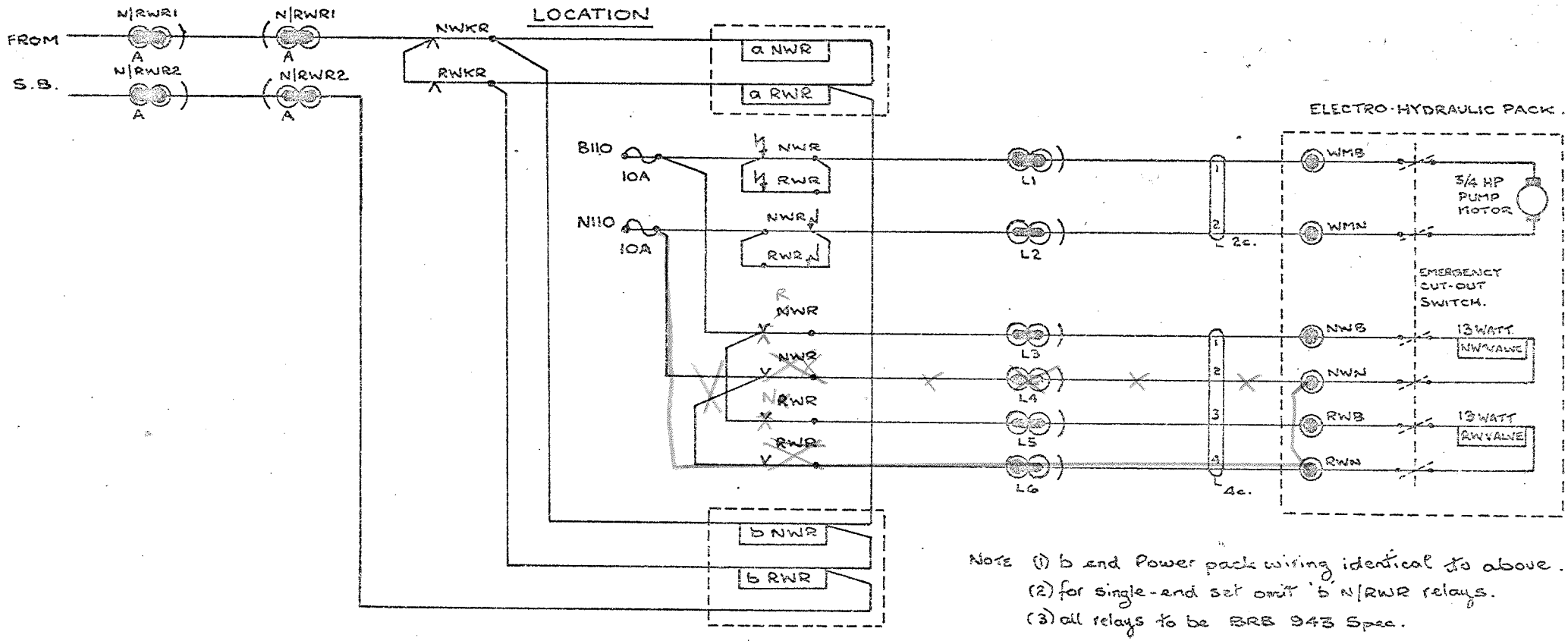

Note (1) b end Power pack wiring identical to above.
(2) for single-end set omit 'b' N/RWR relays.
(3) all relays to be BRB 943 Spec.

CLAMP LOCK CIRCUITS

BR 887

RW. 13/74.

TREADLES

RAIL. A. B.

TREADLE

CAT. Nº.	TYPE.	USE.
9/86/46300	CAUTOR. SINGLE ARM TYPE 1969 MODEL. NON-DIRECTIONAL FITTED WITH 2 C/O. CONTACTS.	G.F. SHUTTING IN.
9/88/77990	FORFEX. DOUBLE ARM TYPE 1969 MODEL. (A-B and B-A) DIRECTION SENSITIVE FITTED WITH C/O. CONTACTS (2 OFF). ONE C/O. CONTACT ONLY OPERATIVE FOR EACH DIRECTION.	TOKENLESS BLOCK.
9/88/19029	FORFEX. DOUBLE ARM TYPE 1969 MODEL. (A-B). DIRECTION SENSITIVE FITTED WITH 2 C/O. CONTACTS. BOTH CONTACTS OPERATIVE FOR A-B DIRECTION ONLY.	A.W.S. SUPPRESSION CIRCUIT. BARRIERS.
9/88/77989	FORFEX. DOUBLE ARM TYPE 1969 MODEL. (B-A) DIRECTION SENSITIVE FITTED WITH 2 C.O. CONTACTS. BOTH CONTACTS OPERATIVE FOR B-A DIRECTION ONLY.	A.W.S. SUPPRESSION CIRCUIT. BARRIERS.

MOUNTINGS

9/86/46316.	MOUNTING BASE FOR F.B. RAIL WITH 1969 TYPE TREADLE.
9/86/46317	MOUNTING BASE FOR B.H. RAIL WITH 1969 TYPE TREADLE.

CONTROLS APPLICABLE TO MOTOR OPERATED FACING POINTS CONTROLLED FROM A MECHANICAL LEVER FRAME

1. APPROACH LOCKING

AN APPROACH LOCKING CIRCUIT CONTROLLED BY ALL SIGNALS READING OVER THE POINTS IN A FACING DIRECTION, FOR WHICH A DISTANT SIGNAL CAN ALSO BE CLEARED, IS TO BE PROVIDED IN THE LEVER LOCK CIRCUIT FOR THE POINTS. RELEASE OF THE APPROACH LOCKING AFTER IT HAS BECOME EFFECTIVE WILL BE EITHER BY :-

(a) PASSAGE OF THE TRAIN PROVED BY OCC. AND CLEARANCE OF THE FIRST T.C. BEYOND THE SIGNAL AND OCC. OF THE SECOND T.C. BEYOND THE SIGNAL.

OR

(b) WHERE THERE IS ONLY ONE T.C. BEYOND THE SIGNAL, THE APPROACH LOCKING WILL BE RELEASED BY OCC. AND CLEARANCE OF THE BERTH T.C. AND OCC. OF THE FIRST T.C. BEYOND THE SIGNAL.

(c) THE APPROACH LOCKING MAY ALSO BE RELEASED AFTER RESTORATION OF APPROPIATE HOME SIGNAL BY THE OPERATION OF A TIMED RELEASE OF DURATION 120 SECS.

2. BERTH TRACK LOCKING

FACING POINTS ARE TO BE LOCKED IN EITHER POSITION BY OCC. OF THE BERTH TRACK ONLY WHERE:-

(a) THE DISTANCE BETWEEN SIGNAL AND TOES OF THE SWITCHES IS LESS THAN 50 YDS. WHERE 110V. MACHINES ARE USED.

(b) THE DISTANCE BETWEEN SIGNAL AND TOES OF THE SWITCHES IS LESS THAN 100 YDS. WHERE 30V. MACHINES ARE USED.

THIS LOCKING WILL BE RELEASED BY A TIMED OCC. OF THE T.C. SIXTY (60) SECS. WILL BE THE NORMAL RELEASE TIME FOR THIS CONDITION. WHERE BERTH TRACK LOCKING IS APPLIED AND THERE IS TWO DIRECTIONAL WORKING OVER THE PORTION OF TRACK CONCERNED, IT MAY BE NECESSARY TO OVERRIDE THE BERTH TRACK WORKING FOR MOVEMENTS THAT OCCUPY THE BERTH TRACK FROM THE OPPOSING DIRECTION. THIS CONDITION WILL BE NECESSARY WHERE IT IS ESSENTIAL FOR THE POINTS TO BE MOVED IMMEDIATELY BEHIND THE TRAIN.

B.R. 887

APPROACH LOCKING AND BERTH TRACK LOCKING

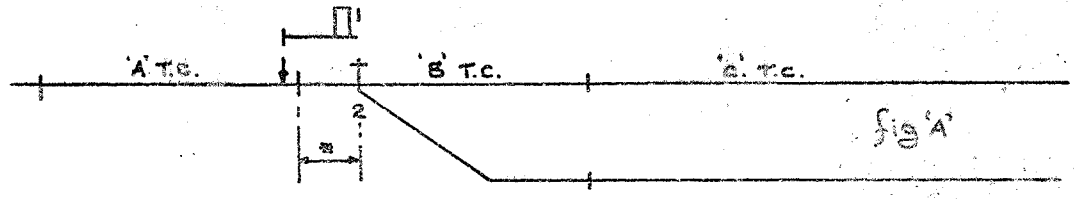

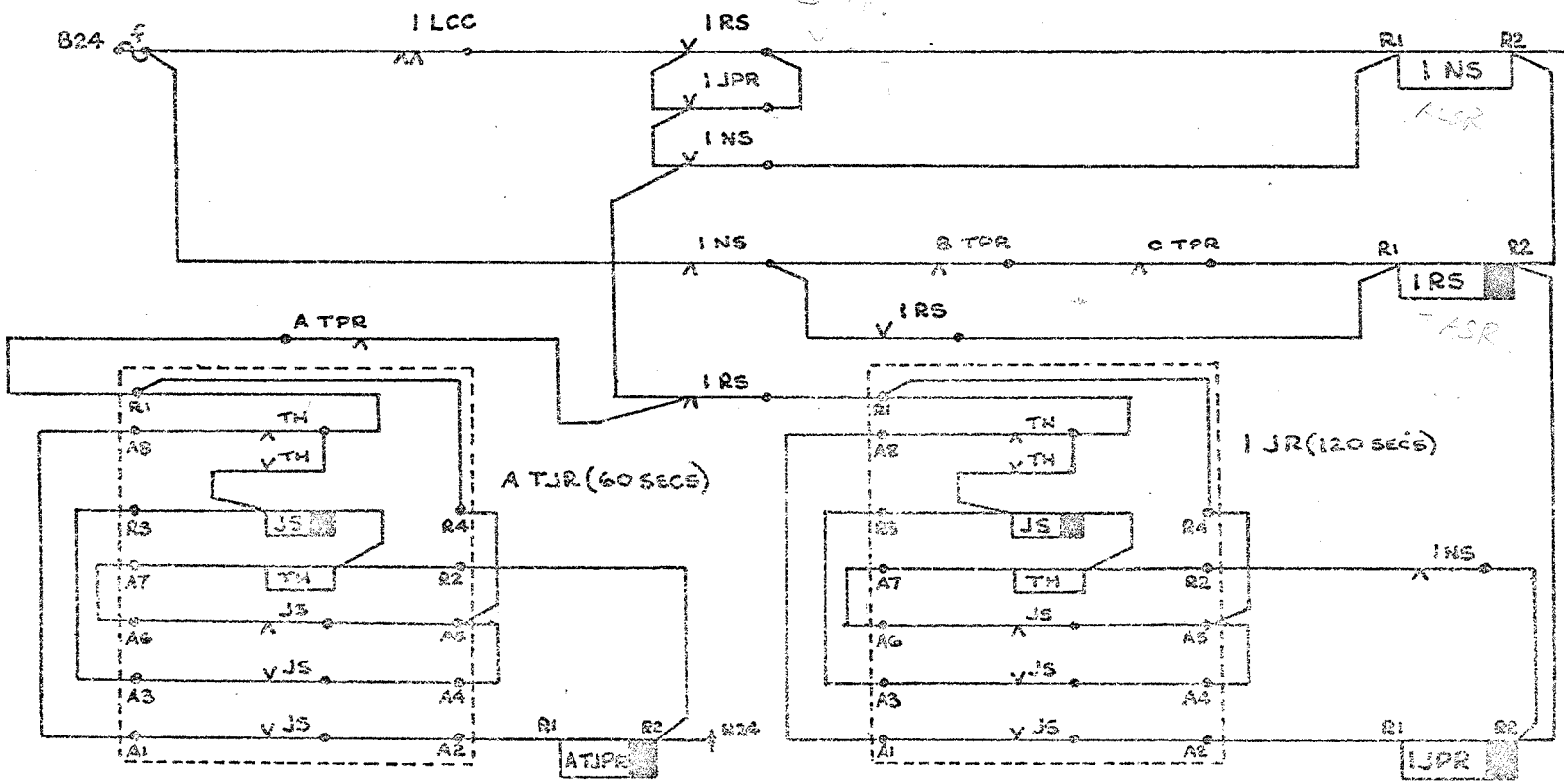

*IF DISTANCE IS LESS THAN 100YDS. APP. LOCKING + B.T. LOCKING IS EFFECTIVE IF GREATER THAN 100 YDS APP. LOCKING ONLY.

BERTH TRACK LOCK. 60 SECS.

APPROACH LOCK. 120 SECS.

SEE ALSO, SHT. 26(B).

RM 1974.

B.R.887

LEVER LOCK CIRCUIT FOR POINTS IN CONJUNCTION WITH APPROACH LOCKING. (SEE FIG A. SHT. 26(2))

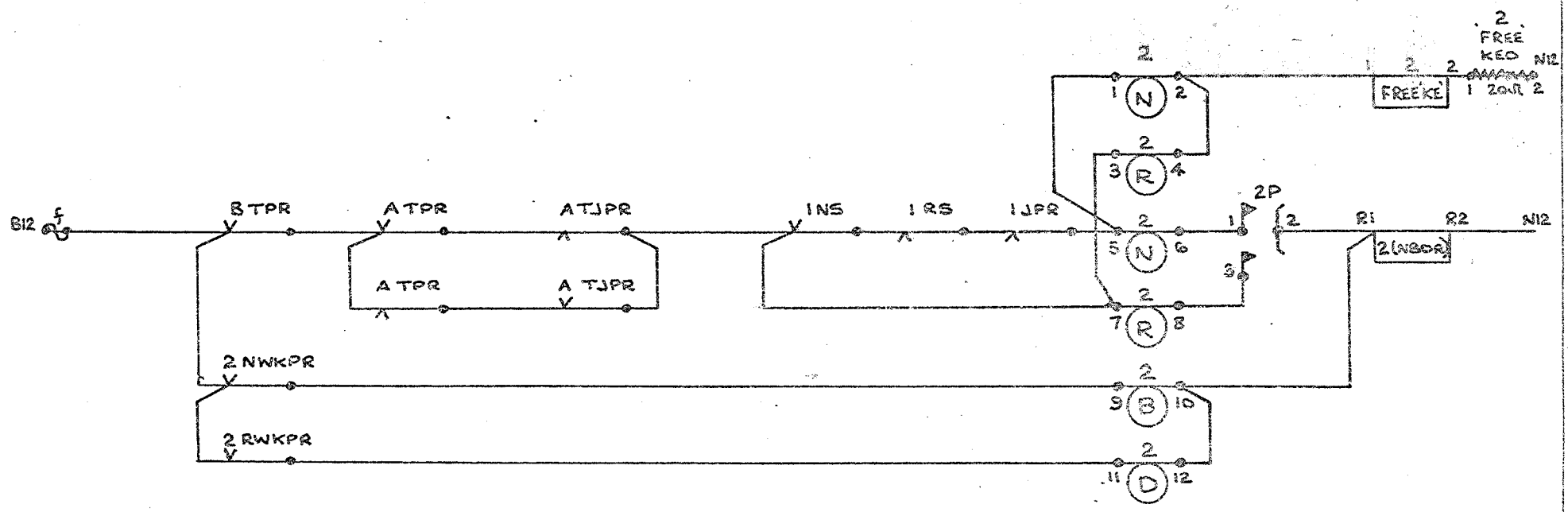

RW 1974.

TOKENLESS BLOCK STANDARDS. - METHOD OF PREPARING

DIAGRAMS. - 1

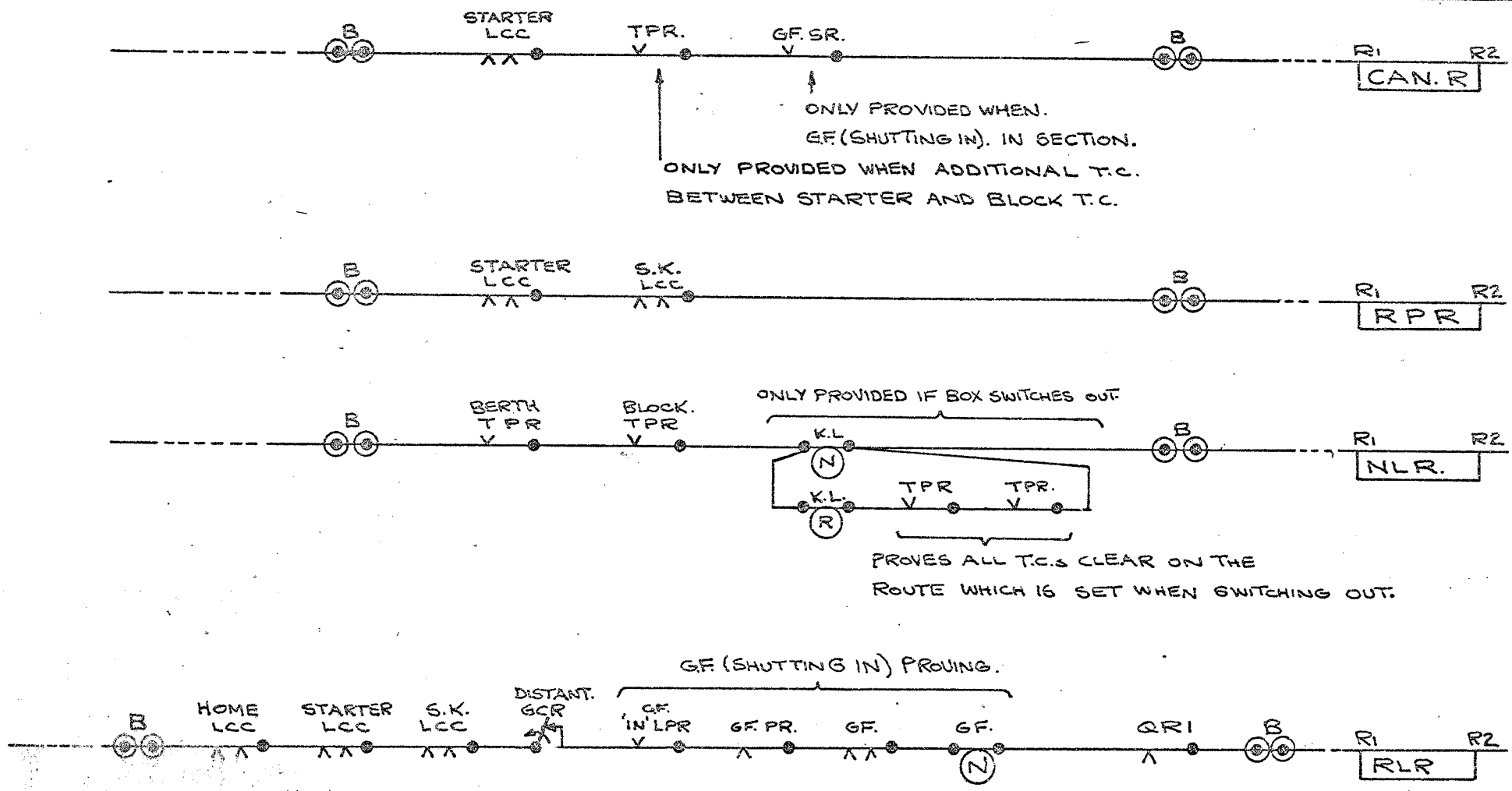

K.L. - KING LEVER.

S.K - SHUNTING KEY.

B.R.887.

TOKENLESS BLOCK STANDARDS. - METHOD OF PREPARING DIAGRAMS. -2

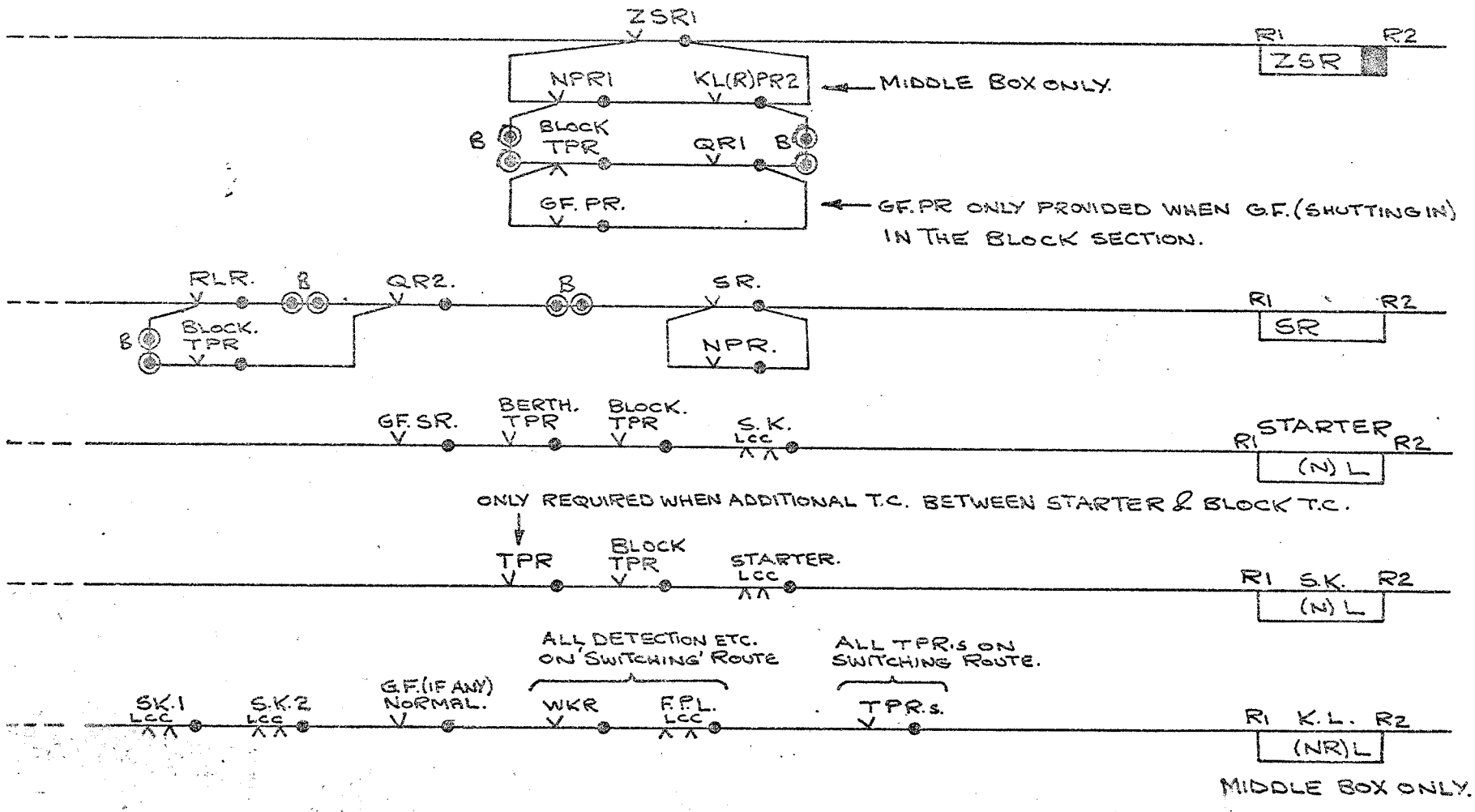

B R 887

B.R 887.

FIG. 1.

SINGLE END

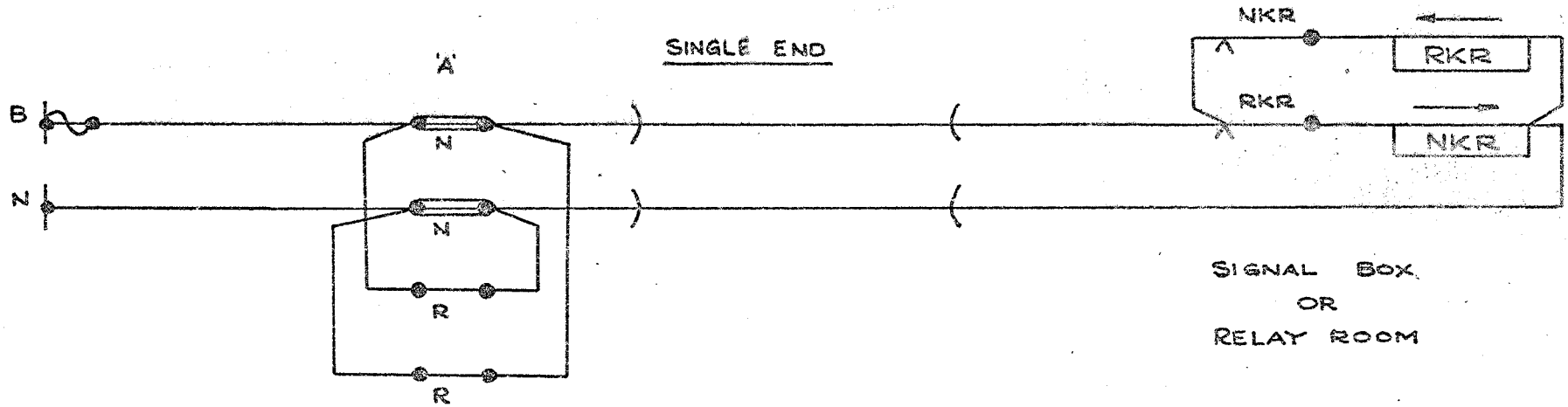

FIG. 2.

MULTI-END

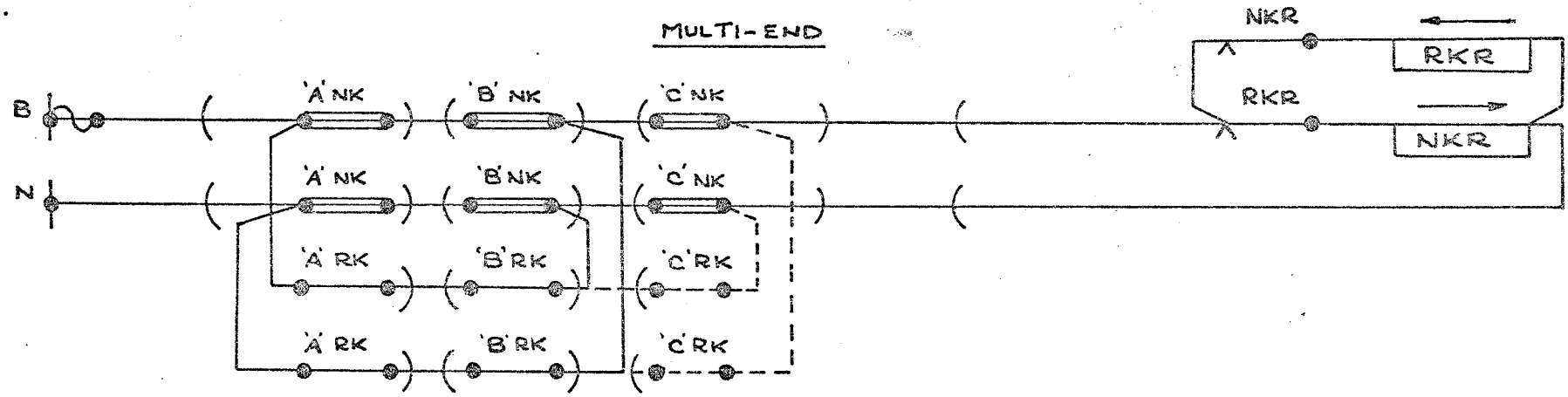

FOR MOTORS OTHER THAN M63

APPENDIX 1.

FIG. 3

EACH SINGLE END.

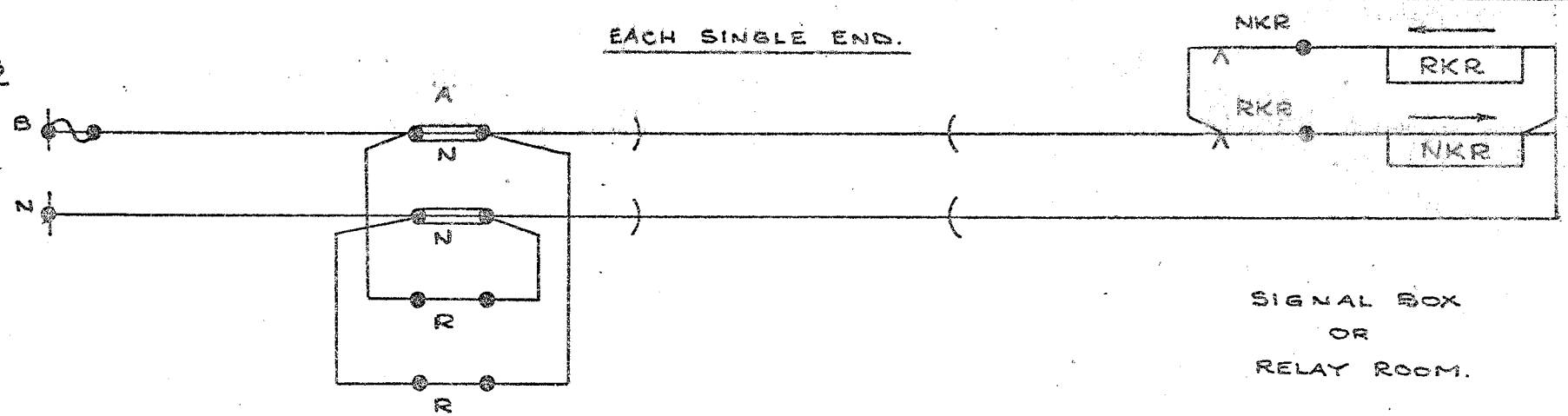

SIGNAL BOX
OR
RELAY ROOM.

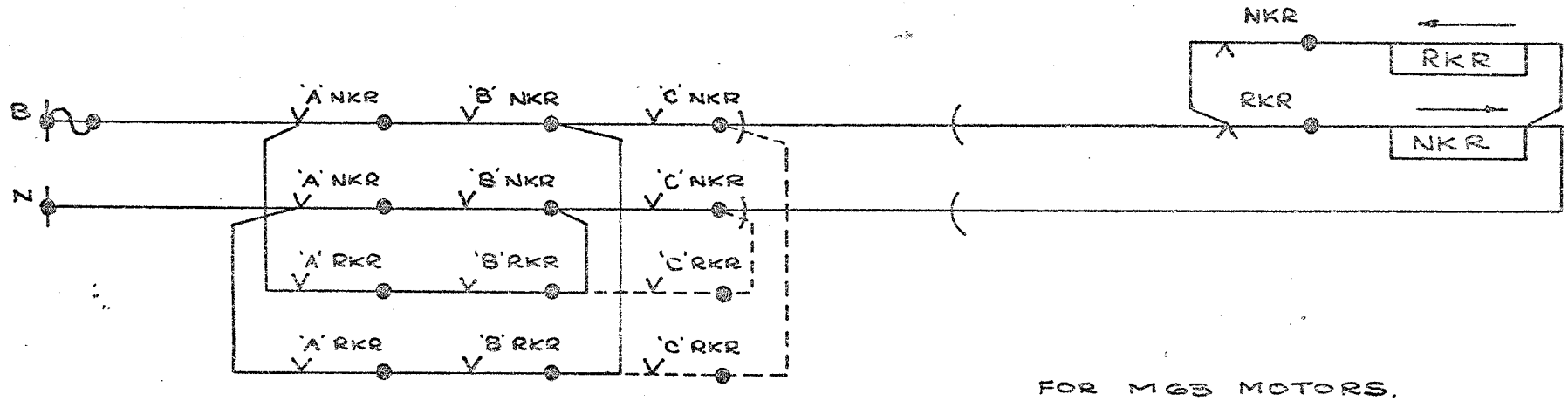

FOR M63 MOTORS.

B.R. STANDARD BLOCK — BELL UNIT No. 1 MODIFIED FOR LONG SECTION WORKING.

BK 837

CIRCUIT DIAGRAM

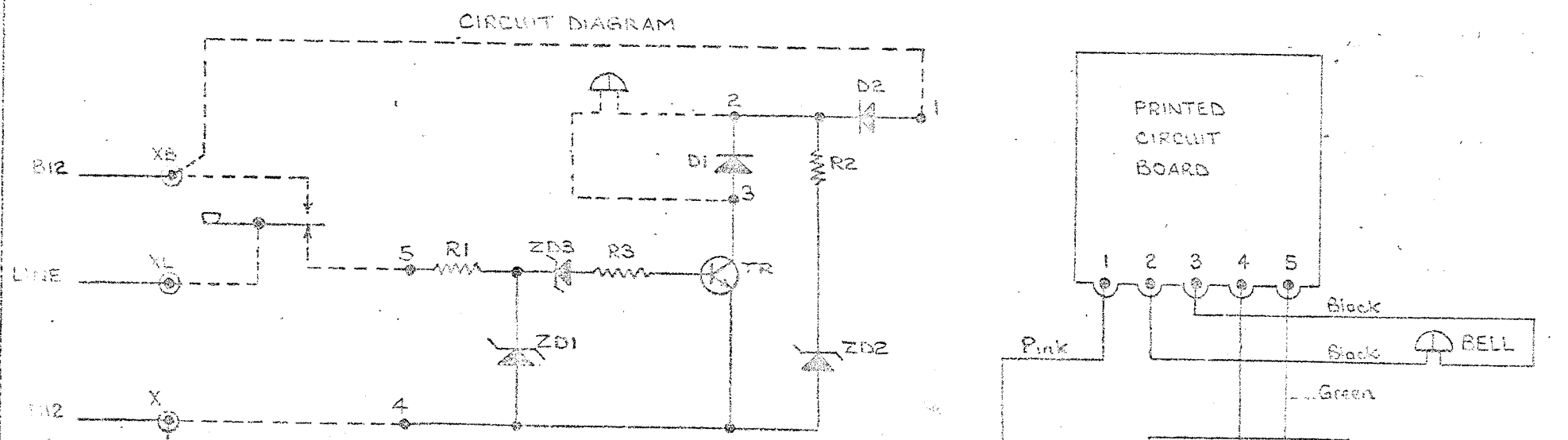

COMPONENTS

TRANSISTOR TR-2N3054

ZENER DIODES

ZD1 — BZY 88 (12V)

ZD2 — BZX 61 (12V)

ZD3 — BZY 88 (3V)

DIODES

D1 — 1G1D (VRRM 100V)

D2 — 1N4001 (VRRM 50V)

RESISTORS

R1 — 270Ω ¼W

R2 — 100Ω ¼W

R3 — 1KΩ ¼W

WIRING DIAGRAM

NOTES :

1. P.U. 6v - 9v.
2. D.A. NOT LESS THAN 4V.
3. LOCAL APPLIED VOLTAGE 10V - 20V.
4. EXTERNAL APPLIED VOLTAGE 10V - 20V.
5. BELL CURRENT 0·2A - 0·4A
6. LINE CURRENT 5mA - 8mA.

RS

CS & TE
BUCHANAN HOUSE
GLASGOW

DS & TE
EDINBURGH

036-2272

COPY TO: DS & TE
GLASGOW

DS & TE
PERTH

→ CS & TE
PROJECT OFFICE

E16
23 1 80

CLAMP LOCKS:
COMPLIANCE WITH ST1210.

The mechanical operation of this equipment is such that the Lock Mechanism is NOT inherently secure under unworked conditions. Hence the security of unworked points is essentially dependant on measures taken by the BR staff.

Please advise me what action should be taken, therefore, to ensure that the requirements of ST1210 are met.

Further, it has also been pointed out to me that on other Divisions, where single stranded tail cable has been used, for the detection circuit, failures have been experienced due to vibration. To combat this, I would suggest that cable type 50/0.025 mm be used.

Please confirm if this is acceptable in order that I can arrange for stocks to be held.

I would also suggest that arrangements be made for GEC to use this type of cable on all clamp locks throughout Edinburgh & East of Scotland Resignalling.

M M Halloway
M M HALLOWAY

→ Copy to All RES
— pls note & arrange
→ RCA.
31/1/80
→ FILE

KLIPPON FUSE/LINK EQUIP.

CAT NO	DESCRIPTION	QTY PER RAIL
54/77100	FUSEHOLDER SAK S3	1
54/76796	END SECTION " " APS 1913	2
54/10017	PLASTIC END BRACKET EWK 1846	
	(7" RAIL/12 FUSEHOLDERS (INCL 3 ENDS))	
54/78135	FUSE CARTRIDGE SAK S3 TYPE C 3 AMP	
54/78450	" " " " " " 5 "	
54/78850	" " " " " " 10 "	
54/79341	" " " " " " 20 "	
88/19313	TERMINAL SAK 2-5 1283	1
54/18242	END SECTION AP 1179	2
54/10017	PLASTIC END BRACKET EWK 1846	
	(4" RAIL/12 TERMINALS (INCL. 3 ENDS))	
54/19318	TERMINAL SAKA10 1320	1
54/18241	END SECTION APA 1342	2
54/10017	PLASTIC END BRACKET 1846	
	(7" RAIL/12 TERMINALS (INCL. 3 ENDS))	
54/9010	RAIL ASSEMBLY 6 ft. LENGTH	

USAGE	(FUSEHOLDERS	SAK S3	STD. SIGNALLING	COT	(FUSING)
	(TERMINAL	SAK 2.5	"	"	(NEG. TERM)
	(TERMINAL	SAK A 10)	"	"	(CABLE TERM)
	(WITH SLIDING LINK	)			